CAT. 2B4

Member of CISQ Federation
RINA
ISO 9001:2000
Certified Quality System
CERTIFICATO N° 95/94/S

代理商
上海柔肯液压科技有限公司
SHANGHAI ROKEN HYDRO-TECH CO., LTD.
地址: 上海市普陀區金沙江路1678號6樓501室(绿洲中環中心)
Add: 6-501, Oasis Middle Ring Center, No. 1678 Jinshajiang Road, PuTuo District, Shanghai 200333, China
電話/Tel: 86-21-61808099
傳真/Fax: 86-21-62595096
Http://www.roken.com.cn

CATALOUGE INDEX

目录索引

QUALITY CERTIFICATES
质量认证书

RINA
www.rina.org

CERTIFICATE N° 95/94/S
证书号：951941S
意大利（RINA）船级社认证

IQNet
THE INTERNATIONAL CERTIFICATION NETWORK

CERTIFICATE N° IT 2633
证书号：IT 2633
国际质量管理体系

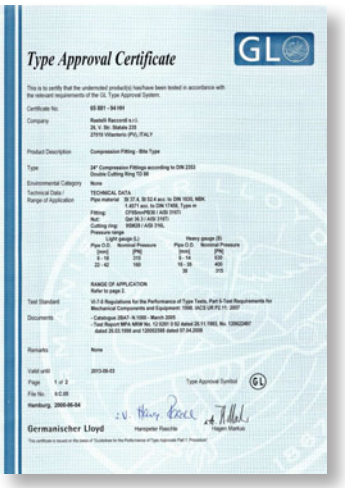

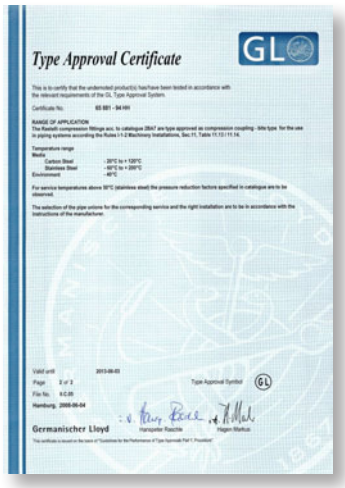

PRODUCT APPROVALS
产品认证书

CERTIFICATE N° 65 881 - 94 HH
证书号：65881-94HH
德国劳氏船级社认证

CERTIFICATE N° MAC/30199/1/TO/99
证书号：MAL/30199/1/T0199
意大利船级社认证

CERTIFICATE N° MAC/30199/2/TO/99
证书号：MAC/30199/21TO/99
意大利船级社认证

CERTIFICATE N° P-12795
证书号：P-12795
挪威船级社认证

CERTIFICATE N° 05-0538-GN
证书号：05-0538-GN
德国燃气与水工业协会认证

TECHNICAL DATA
一般技术资料

Surface finishes for steel couplings (DIN 3859).
碳钢管接头表面处理（碳钢材质符合 DIN3859 标准）

Series LL/L/S (Bodies. Rings. Nuts):
Rastelli 管接头分为超轻型、轻型、重型（接头体、卡套和卡套螺母）
White passivation treatment Fe/Zn 8-UNI ISO 2081 with trivalent Chrome (free from hexavalent chrome) with sealer in compliance with the European Norm EC 200/53.
符合标准 UNI ISO 2081 的白锌三价铬（不含六价铬）的表面处理，表面的封闭液层符合欧洲标准 EC200/53，盐雾实验抗白斑时间为 200 小时，抗红绣时间为 400 小时以上。
有特殊要求的表面处理可以订制。

Pressure values indicated in the relative coupling tables in accordance with DIN 2401 STANDARDS
本目录里相关的管接头的压力值是符合 DIN2401 标准。

a) PN rated pressure corresponds to a safety factor of PN × 4 times.
公称压力设计系数为 4.
b) Maximum PE operating pressure corresponds to a safety factor of:
最高工作压力安全系数 .
PE × 2.5 times for the complete coupling.
安装后系数为 2.5 倍 .
PE × 4 times for the ring pre-assembled on pipe.
预安装系数为 4 倍 .
The pressure values indicated in the relative coupling tables are understood as the maximum operating pressure values inclusive of peak values during standard operating conditions. with maximum permissible TB (DIN 2401) operating temperatures of:
本目录里相关的管接头的压力值为最大操作压力值包括最高峰值的操作条件下，允许的最高工作温度为：

- 40℃ ÷ + 120℃ for steel (DIN 3859) 碳钢接头（DIN3895）
- 60℃ ÷ + 200℃ for AISI 316 Ti stainless steel (DIN 17122-W. Nr. 1.4571) AISI 316 Ti 不锈钢接头（DIN 17122-W.No.1.4571）

With stainless steel. pressure values must be reduced in accordance with increases in the operating temperature:
不锈钢材质管接头的压力值会随着工作温度的上升而降低

+ 50℃ = -4% ~ pressure
+ 50℃ = 压力降低 4%
+100℃ = -10% ~ pressure
+100℃ = 压力降低 10%
+200℃ = -20% ~ pressure
+200℃ = 压力降低 20%
+300℃ = -30% ~ pressure
+300℃ = 压力降低 30%
+400℃ = -35% ~ pressure
+400℃ = 压力降低 35%

Materials and operating temperatures for DIN 2353 / ISO 8434-1coupling seals
DIN 2353/ISO 8434-1 标准卡套式管接头的不同材质密封件的工作温度范围

NBR (Perbunan® - BAYER)	=	-35℃ ÷ +100℃	for steel (DIN 3859)
NBR（丁晴橡胶）	=	-35℃至 +100℃	碳钢材质（DIN3859）
FPM (Viton® - DU PONT)	=	-25℃ ÷ +200℃	for AISI 316 Ti stainless steel (DIN 17122-W. Nr. 1.4571).
FPM（氟橡胶）	=	-25℃至 +200℃	不锈钢 AISI316 材质（DIN 17122-W.Nr.1.4571）

For the fittings with seals attend to the instructions of NORM DIN 7716 "RUBBER PRODUCTS". Requirements for storage. cleaning and maintenance。
带弹性密封件的产品请按照橡胶产品规范 DIN7716 储存，清理和保养。

Recommended torque wrench setting MT in Nm
管接头的旋紧力矩

For male stud couplings with DIN 3852 Type B Part 2 type seal and flat GG with DIN 3852 Type E Part 11
适用于外螺纹端口符合 DIN3852 标准的第二部分形式和 DIN3852 标准的第 11 部分的形式 E

Series 系列	Pipe Ø 管子外径 O.D.	THREADS – TORQUE WRENCH SETTINGS 螺纹形式					
		B.S.P. ThreadØ 英制螺纹	Type B MT (Nm)B 型扭力	Type E MT (Nm)E 型扭力	Metric Thread Ø 公制螺纹	Type B MT (Nm) 形式 B 扭力	Type E MT (Nm) 形式 E 扭力
轻型 L	6	G 1/8"	25	20	M 10 × 1	25	20
	8	G 1/4"	45	40	M 12 × 1.5	30	30
	10	G 1/4"	45	40	M 14 × 1.5	50	50
	12	G 3/8"	85	80	M 16 × 1.5	80	60
	15	G 1/2"	160	100	M 18 × 1.5	90	80
	18	G 1/2"	105	100	M 22 × 1.5	150	140
	22	G 3/4"	230	200	M 26 × 1.5	240	200
	28	G 1"	390	380	M 33 × 2	400	380
	35	G 1"1/4	600	500	M 42 × 2	600	500
	42	G 1"1/2	800	600	M 48 × 2	800	600
重型 S	6	G 1/4"	60	60	M 12 × 1.5	45	45
	8	G 1/4"	60	60	M 14 × 1.5	60	60
	10	G 3/8"	110	90	M 16 × 1.5	95	80
	12	G 3/8"	110	90	M 18 × 1.5	120	100
	14	G 1/2"	170	130	M 20 × 1.5	170	140
	16	G 1/2"	140	130	M 22 × 1.5	190	150
	20	G 3/4"	320	200	M 27 × 2	320	200
	25	G 1"	390	380	M 33 × 2	450	380
	30	G 1"1/4	600	500	M 42 × 2	600	500
	38	G 1"1/2	800	600	M 48 × 2	800	600

The torque values given here are only approximate and referring to the assembly of steel fittings with a protective surface treatment of galvanizing of the components made of the same material by using a lubricant (or a special anti-seizure agent in case of stainless steel - values given on request). following the directions of the Assembly Instructions. Said values can change according to materials employed. tolerances and surface finishing of the assembling components as well as the assembly method.
这些力矩数据仅仅适用于镀锌管接头的材质和连接部件的材质完全相同的场合并完全遵循安装说明书的指示，也就说扭矩会因为采用不同的材质、公差、配件的表面处理和安装方式而变化。
Use the values relative to the S series for TN 141 couplings.
上述表格的扭力也同样也适用于 TN141 接头系列。

Types of thread for DIN 2353 / ISO 8434-1 couplings
适用于 DIN2353/ISO8434-1 卡套式接头的螺纹形式

B.S.P. PARALLEL	=	UNI EN ISO 228
英制圆柱螺纹	=	UNI EN ISO 228
B.S.P. TAPER	=	UNI ISO 7/1 (UNI EN ISO 10226/1)
英制锥螺纹	=	UNI IDO7/1(UNI EN ISO 10226/1)
METRIC PARALLEL	=	UNI 4535-64
公制圆柱螺纹	=	UNI 4535-64
METRIC TAPER	=	DIN 158
公制锥螺纹	=	DIN158
NPT	=	ANSI/ASME B.1.20.1 (1983)
美制锥螺纹	=	ANSI/ASME B.1.20.1 (1983)
UNF-UN	=	ANSI/ASME B.1.1 (1989)
美制细牙直管螺纹	=	ANSI/ASME B.1.1 (1989)

Hermetic seals for taper threads
锥螺纹的密封件

Taper threads are not hermetically sealed. To obtain a watertight hermetic seal additional sealing elements are required such as PTFE sealing tape (e. g.: TEFLON).
锥螺纹不完全密封，若要获得完全密封则需要 PTFE 材质的密封件（比如生料带）

Thread coupling
管接头的油口端螺纹和密封型式

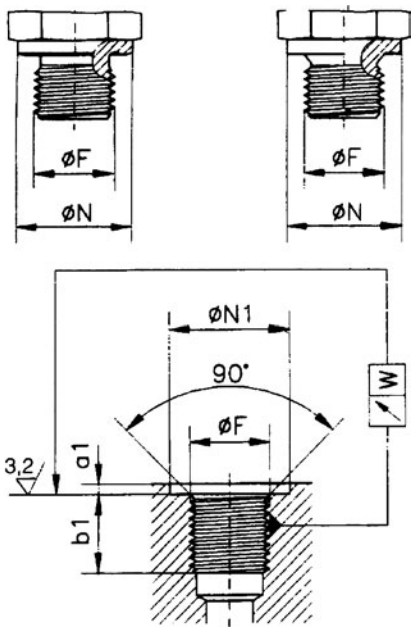

Male stud. form B
DIN 3852. Part 1-2
metal to metal seal

DIN3852.第一部分形式B
硬性密封结构

Male stud. form A
DIN 3852. Part 2
seal to DIN 7603 standards

DIN3852 第二部分形式A
带弹性体密封结构

Port form X
to DIN 3852. Part 1-2
(for parallel stud thread)

与A.B形式端部适配的螺纹形式X

Thread B.S.P. parallel
英制圆柱螺纹

Ø F	+0.4 Ø N1	Ø N	a1 MAX	b1 MIN	W
G 1/8"-28	15	14	1	8	0.1
G 1/4"-19	20	18	1.5	12	0.1
G 3/8"-19	23	22	2	12	0.1
G 1/2"-14	28	26	2.5	14	0.1
G 3/4"-14	33	32	2.5	16	0.2
G 1"-11	41	39	2.5	18	0.2
G 1"1/4-11	51	49	2.5	20	0.2
G 1"1/2-11	56	55	2.5	22	0.2

* Tolerance class (A) is only valid for male threads
A 级公差仅适用于外螺纹

Thread metric parallel
公制圆柱螺纹

Ø F	+0.4 Ø N1	Ø N	a1 MAX	b1 MIN	W
M 10 × 1	15	14	1	8	0.1
M 12 × 1.5	18	17	1.5	12	0.1
M 14 × 1.5	20	19	1.5	12	0.1
M 16 × 1.5	23	21	1.5	12	0.1
M 18 × 1.5	25	23	2	12	0.1
M 20 × 1.5	27	25	2	14	0.1
M 22 × 1.5	28	27	2.5	14	0.1
M 26 × 1.5	33	31	2.5	16	0.2
M 27 × 2	33	32	2.5	16	0.2
M 33 × 2	41	39	2.5	18	0.2
M 42 × 2	51	49	2.5	20	0.2
M 48 × 2	56	55	2.5	22	0.2

Thread coupling
管接头的油口端螺纹和密封型式

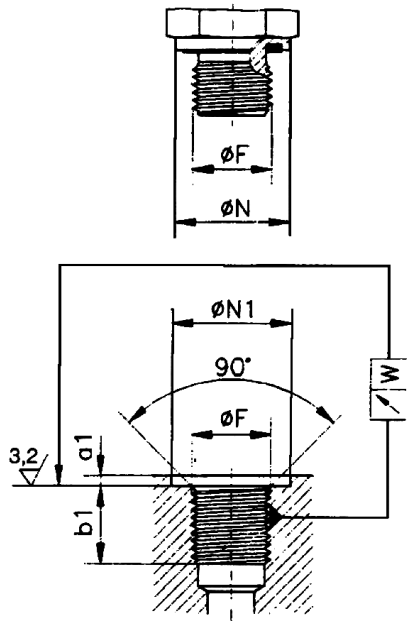

Male stud. form E
DIN 3852. Part 11
Packing-ensured tightness.
DIN3852第11部分，形式E
带弹性体密封结构

Port form X
to DIN 3852. Part 1-2
(for parallel stud thread)
与A.B形式端部适配的螺纹形式X

Thread B.S.P. parallel
英制圆柱螺纹

Ø F	+0.4 Ø N1	Ø N	a1 MAX	b1 MIN	W
G 1/8"-28	15	13.9	1	8	0.1
G 1/4"-19	20	18.9	1.5	12	0.1
G 3/8"-19	23	21.9	2	12	0.1
G 1/2"-14	28	26.9	2.5	14	0.1
G 3/4"-14	33	31.9	2.5	16	0.2
G 1"-11	41	39.9	2.5	18	0.2
G 1"1/4-11	51	49.9	2.5	20	0.2
G 1"1/2-11	56	54.9	2.5	22	0.2

* Tolerance class (A) is only valid for male threads
A 级公差仅适用于外螺纹

Thread metric parallel
公制圆柱螺纹

Ø F	+0.4 Ø N1	Ø N	a1 MAX	b1 MIN	W
M 10 × 1	15	13.9	1	8	0.1
M 12 × 1.5	18	16.9	1.5	12	0.1
M 14 × 1.5	20	18.9	1.5	12	0.1
M 16 × 1.5	23	21.9	1.5	12	0.1
M 18 × 1.5	25	23.9	2	12	0.1
M 20 × 1.5	27	25.9	2	14	0.1
M 22 × 1.5	28	26.9	2.5	14	0.1
M 26 × 1.5	33	31.9	2.5	16	0.2
M 27 × 2	33	31.9	2.5	16	0.2
M 33 × 2	41	39.9	2.5	18	0.2
M 42 × 2	51	49.9	2.5	20	0.2
M 48 × 2	56	54.9	2.5	22	0.2

Thread coupling
管接头的油口端螺纹和密封型式

Male stud. form C
DIN 3852. Part 1-2
taper thread
DIN3852，第1-2部分，形式C，锥螺纹

Port form Z
to DIN 3852. Part 1-2
(for taper stud thread only)
DIN3852 .第1-2部分的形式Z，仅适用于锥螺纹

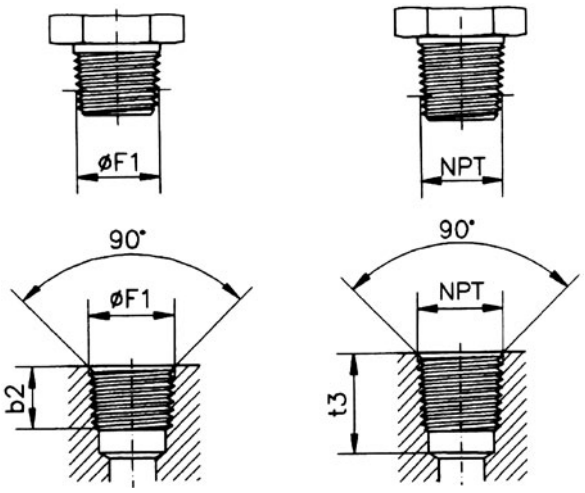

Male stud NPT
NPT 外螺纹
Port NPT
NPT 螺纹孔

Thread B.S.P. taper
英制锥螺纹

Ø F1	b2 MIN
R 1/8"-28 CON.	5.5
R 1/4"-19 CON.	8.5
R 3/8"-19 CON.	8.5
R 1/2"-14 CON.	10.5
R 3/4"-14 CON.	13
R 1" -11 CON.	14.5
R 1"1/4-11 CON.	17
R 1" 1/2-11 CON.	17

Thread metric taper
公制锥螺纹

Ø F1	b2 MIN
M 8 × 1 CON.	5.5
M 10 × 1 CON.	5.5
M 12 × 1.5 CON.	8.5
M 14 × 1.5 CON.	8.5
M 16 × 1.5 CON.	8.5
M 18 × 1.5 CON.	8.5
M 20 × 1.5 CON.	10.5
M 22 × 1.5 CON.	10.5

NPT thread
美制锥螺纹

NPT	t3 MIN
1/8" - 27 NPT	11.6
1/4" - 18 NPT	16.4
3/8" - 18 NPT	17.4
1/2" - 14 NPT	22.6
3/4" - 14 NPT	23.1
1"- 11.5 NPT	27.8
1"1/4 - 11.5 NPT	28.3
1"1/2 - 11.5 NPT	28.3

Thread coupling
管接头的油口端螺纹和密封型式

Male stud UNF-UN-2A for O-Ring sealing (SAE J 514)
UNF-UN-2A 外螺纹O型圈密封（SAEJ514）

Port UNF-UN-2B for O-Ring sealing (SAE J 514)
UNF-UN-2B螺纹孔 O型圈密封（SAEJ514）

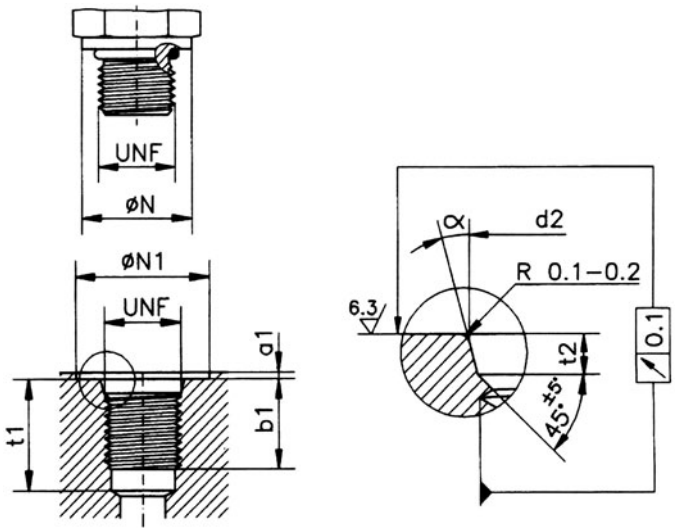

UNF/UN thread
UNF/UN螺纹表

UNF	b1 MIN	Ø N MIN	+0.1 d2	+0.3 t2	t1 MIN	± 1° α	Ø N1 MIN	a1 MAX
7/16 - 20 UNF	12	14.4	12.4	2.4	14	12°	21	1
9/16 - 18 UNF	13	17.6	15.6	2.5	16	12°	26	1
3/4 - 16 UNF	15	22.3	20.6	2.6	18	15°	32	1.5
7/8 - 14 UNF	17	25.5	23.9	2.6	20	15°	35	1.5
1"1/16 - 12 UN	20	31.9	29.2	3.3	24	15°	42	1.5
1"5/16 - 12 UN	20	38.2	35.5	3.3	24	15°	50	2
1"5/16 - 12 UN	20	47.7	43.5	3.4	24	15°	60	2.5

Thread coupling
卡套管接头的管端尺寸

TUBE CONNECTION DIMENSIONS (Threaded coupling TN 87)
TN87的卡套管接头的管端尺寸

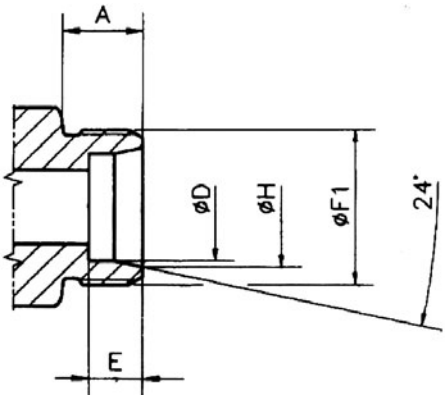

Thread metric parallel 公制圆柱螺纹

系列	Ø 钢管外径 D	Ø F1 螺纹	A	E	Ø H
超轻型 LL	4	M 8 × 1	8	4	5
	5	M 10 × 1	8	5.5	6.5
	6	M 10 × 1	8	5.5	7.5
	8	M 12 × 1	9	5.5	9.5
	10	M 14 × 1	9	5.5	11.5
	12	M 16 × 1	9	6	13.5
轻型 L	6	M 12 × 1.5	10	7	8.1
	8	M 14 × 1.5	10	7	10.1
	10	M 16 × 1.5	11	7	12.3
	12	M 18 × 1.5	11	7	14.3
	15	M 22 × 1.5	12	7	17.3
	18	M 26 × 1.5	12	7.5	20.3
	22	M 30 × 2	14	7.5	24.3
	28	M 36 × 2	14	7.5	30.3
	35	M 45 × 2	16	10.5	38
	42	M 52 × 2	16	11	45
重型 S	6	M 14 × 1.5	12	7	8.1
	8	M 16 × 1.5	12	7	10.1
	10	M 18 × 1.5	12	7.5	12.3
	12	M 20 × 1.5	12	7.5	14.3
	14	M 22 × 1.5	14	8	16.3
	16	M 24 × 1.5	14	8.5	18.3
	20	M 30 × 2	16	10.5	22.9
	25	M 36 × 2	18	12	27.9
	30	M 42 × 2	20	13.5	33
	38	M 52 × 2	22	16	41

INSTRUCTIONS

安装指南

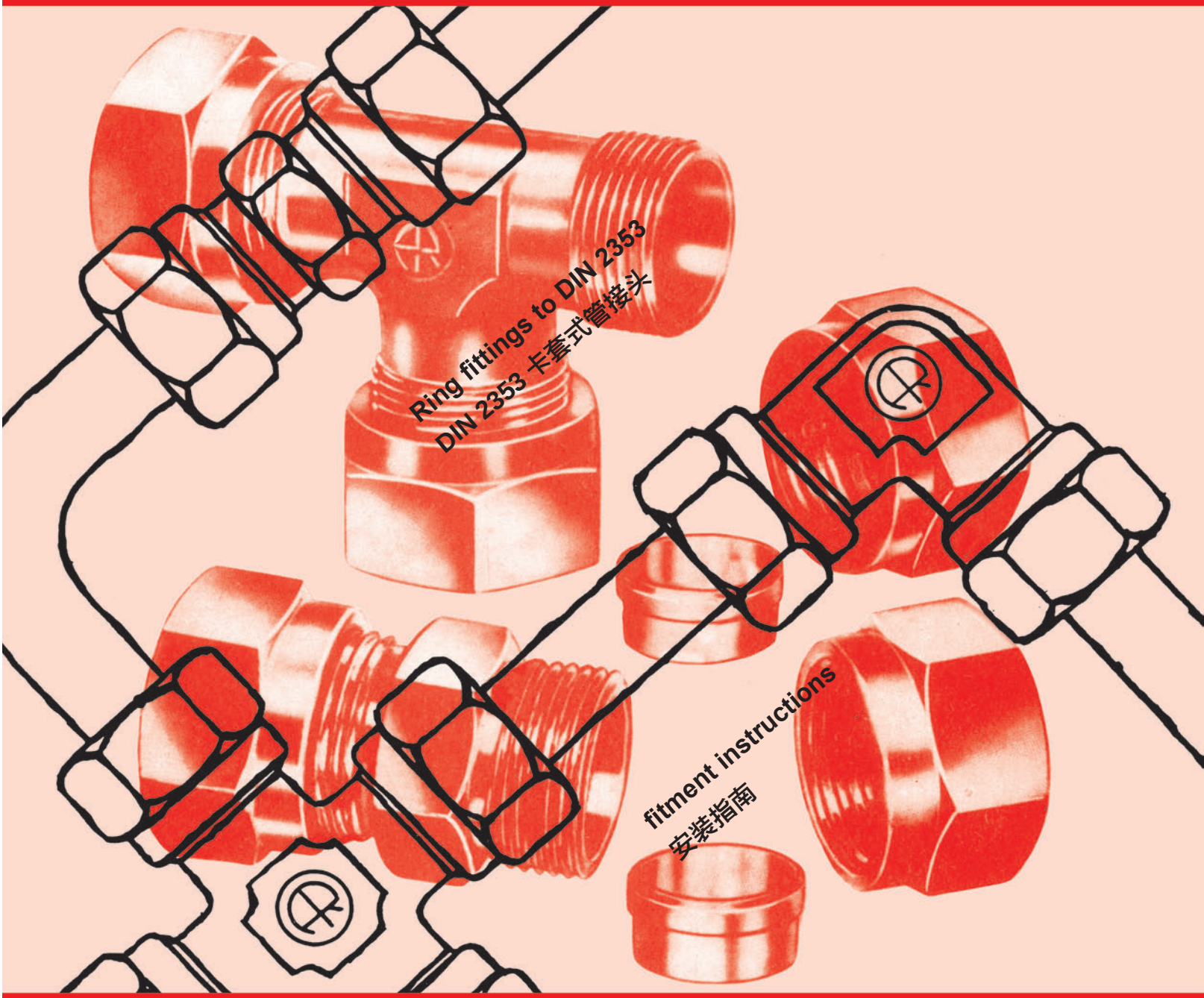

DIRECT CONNECTION TO THE BODY OF THE UNION FOR STEEL PIPES
直接安装到管接头上

1. Preparing the inside and outside of the pipe
装配前的管子准备工作

1.1

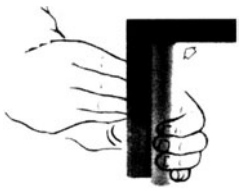

Cut the pipe at right angle. A maximum variation of 0.5 ° in relation to the pipe axis is permitted.
如图所示，正确的切割管子，最大切割角度允许偏差为 0.5°

1.2

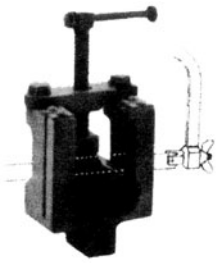

It is easier to cut the pipe at a right angle if a hacksaw is used with the special tool.
使用一把合适的锯齿工具更容易切割出正确角度的管子

CAUTION: Never use pipe cutters or cut-off saws which leave the pipe ends with abundant burrs and slanted cuts. Pipe ends with burrs or incorrect angles reduce the lifetime and sealing efficiency of the union.
注意：禁止使用管子切割机，因为切割机会在管子的端部产生锥形的端口或毛刺，这些不恰当的角度和毛刺将会降低管接头的密封性能和使用寿命。

1.3

Deburr the inside and outside of the pipe slightly. without damaging the mating surface (max. bevel 0.2 ϕ 45°).
清洁管子的内外端口，无金属碎片，端口表面光滑。

CAUTION: If using thin-wall pipes. the reinforcing rings TN 80 must be used (see point 15.3).
注意：在适用薄壁钢管时，我们建议适用加强衬套 TN80（15.3 图所示）

2. Preparing the unions (Lubrication)
润滑工作

2.1

Oil the TD 88 ring. the thread of the nut TN 81. the tapered seat and the thread of the union.
在管接头的螺纹和卡套 TD88 和卡套螺母 TN81 上涂上润滑油。

2.2

Insert the nut TN 81 and the ring TD 88 until they fit against the end of the pipe.
将螺母 TN81 和卡套 TD88 套到管子上，直到感觉它们到达管子底部。

2.3

Fit the head of the ring TD 88 facing towards the thread of the nut TN 81.

CAUTION: The ring TD 88 must always be fitted in the correct direction.
注意：卡套 TD88 必须以正确的方向套入，卡套有刃口的一头应朝向管端。

3. Screw connection
螺纹连接

3.1

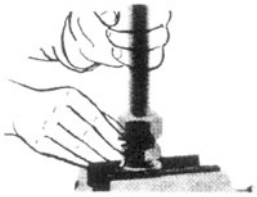

Insert the pipe into the union until it reaches the stop and fully tighten the nut TN 81 by hand.
把接头插入管子，并用手旋紧螺母 TN81 直到感觉拧不动了。

CAUTION: The pipe must rest completely against the seat in the union; otherwise. the correct cut will not be made in the ring TD 88.
注意：管端口必须紧靠在接头体上，否者卡套就不能对管子有效的切割。

3.2

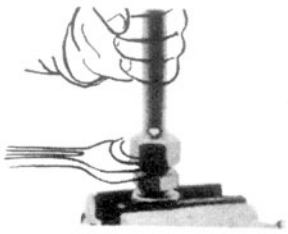

Tighten the nut TN 81 by about one and a half turns. Check that the pipe does not turn with the nut TN 81., To check that tightening takes place correctly. mark the nut TN 81 and the pipe.
用扳手把螺母 TN81 旋转 1 1/2 转，并防止管子转动。

4. Checking
装配检查

4.1

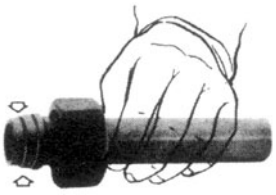

Unscrew the nut TN 81 and check that the incision on the pipe is uniform; it must form a collar of material in front of the first cutting edge of the ring TD 88. The ring may turn on the pipe. If the cut is not uniform. repeat the operation. tightening further.
旋开卡套螺母，检查管子上的切口是否均匀，可见在卡套 TD88 的作用下，管子上有隆起的位置，卡套可以在管子上转动但不可轴向移动。若切口不明显需要加大力度重复操作。

CAUTION: The ends of dismantled pipes must be refitted to the same unions used for the tightening procedure.
注意，拆除后的管子必须于其旋转过程中适用的接头体一样。

5. Reassembly
重复安装

5.1

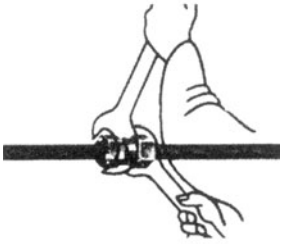

Whenever the pipe connections are dismantled. the nut TN 81 must be screwed tightly onto the union as during first installation (using the same force). supporting the union with a second spanner.
重新安装时，螺母必须适用相同的扭力安装到预安装的位置，可使用另一把扳手夹住接头体。

6. Minimum pipe length
最小直管长度

6.1

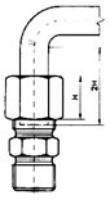

Minimun length of straight pipe in elbows; at least twice the thickness of the nut TN 81 (H).
弯管最小直线长度为螺母的长度的 2 倍

6.2

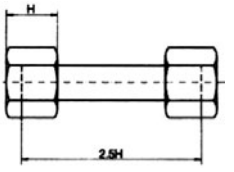

Minimum lenght of the pipe between two unions: at least 2.5÷3 times the thickness of nut TN 81 (H).
直管连接最小直线长度为螺母的 2.5 至 3 倍

CAUTION: The straight section of pipe in elbows (2H) must not show any differences in roundness or straightness which exceed the dimensional tolerances of the pipe under DIN 2391.
注意：直线距离的线型公差必须符合 DIN2391 标准内。

CONNECTION WITH THE PREFITTING TOOL TN 195 (and subsequent final tightening on the union)

采用预安装模具 TN195 进行安装

7. Checking the prefitting tool TN 195
   检查预装模具TN195

7.1

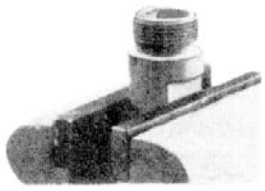

The tapered seat of the prefitting tool TN 195 is subject to wear. so it must be checked at regular intervals (after the 50th fitting procedure) using the specific tapered gauge TN 196. to ensure that its taper is correct.
由于预装工具 TN195 的锥形端口会磨损，所以有必要要用锥形规 TN196 定期检查以确保锥度正确。

CAUTION: All TN 195 prefitting tools which are out of tolerance must be replaced to avoid fitting errors. Make a visual check on the taper for any scoring or other anomalies which the tapered gauge TN 196 will not detect.
注意：所有预装工具 TN195 超出公差 / 必须更换掉以避免安装出错，同时用肉眼检查锥度上 TN 196 规无法检测到的任何刮痕或其他异物。

8. Preparing the inside and outside of the pipe
   管子准备工作

8.1

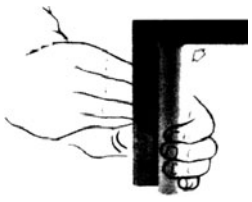

Cut the pipe at right angle. A maximum variation of 0.5° in relation to the pipe axis is permitted.
正确切割管子，管子的切割角度最大公差为 0.5°

8.2

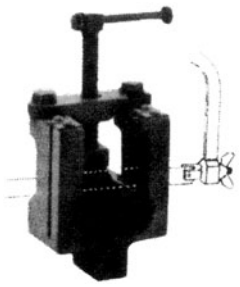

It is easier to cut the pipe at a right angle if a hacksaw is used with the special tool.
适用正确的锯齿工具更容易切割出正确角度的管子。

CAUTION: Never use pipe cutters or cut-off saws which leave the pipe ends with abundant burrs and slanted cuts. Pipe ends with burrs or incorrect angles reduce the lifetime and sealing efficiency of the union.
注意：禁止使用管子切割机，因为切割机会在管子端部留下锥形端口或毛刺，这些不恰当的角度和毛刺将会降低管接头密封性能和使用寿命。

8.3

Deburr the inside and outside of the pipe slightly. without damaging the mating surface (max. bevel 0.2 ϕ 45°).
清洁管子的内外端口，无金属碎片，端口表面光滑。

CAUTION: If using thin-wall pipes. the reinforcing rings TN 80 must be used (see point 15.3).
注意：若在使用薄壁钢管时，我们建议适用加强衬套 TN80(如 15.3 图所示)

9. Preparing the unions (LUBRICATION)
润滑工作

9.1

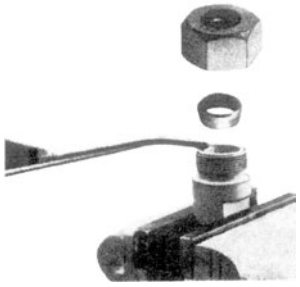

Oil the ring TD 88. the thread of the nut TN 81. the tapered seat and the thread of the prefitting tool. For stainless steel unions. the ring TD 88. the thread of the nut TN81. the tapered seat and the thread of the prefitting tool must be lubricated using an anti-seizing product (e.g. Molyguard - Vanguard)
在预装工具、端口止档座、接头体、卡套和螺母上涂上润滑油，如果不锈钢材质接头，我们必须用抗磨损润滑剂。

For standard fitting of stainless steel pipes and for large diameters (over 20S). and for all TN 119-120-121-126-132. pipe unions. the union MUST be prefitted in the special TN 195 tool.
不锈钢接头和大尺寸（超过20S）和TN 119-120-121-126-132的接头必须使用特殊的TN195预装工具

9.2

Insert the nut TN 81 and the ring TD 88 until they fit against the end of the pipe.
把卡套螺母 TD88 和 TN81 卡套安装到切割好管端。

9.3

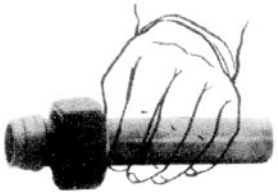

Fit the head of the ring TD 88 facing towards the thread of the nut TN 81.
卡套头部必须正对着卡套螺母的螺纹。

CAUTION: The ring TD 88 must always be fitted in the correct direction.
注意：卡套必须以正确的方式套入。

10. Vormontage
准备安装

10.1

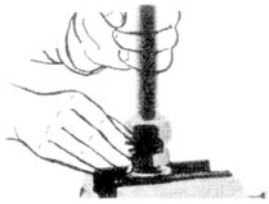

Insert the pipe into the tool TN 195 until it reaches the stop and fully tighten the nut TN 81 by hand.
把管子插入 TN195 工具直到达底部用手旋紧卡套螺母 TN81。

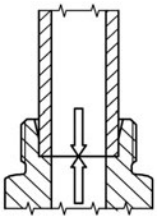

CAUTION: The pipe must rest completely against the seat in the tool TN 195; otherwise. the correct cut will not be made in the ring TD 88.
注意：管子必须完全插入 TN195 工具的止档座，否者无法正确切割管子。

10.2

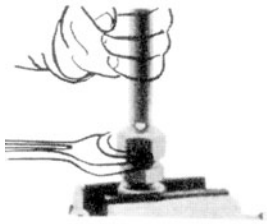

Tighten the nut TN 81 by about one turn. Check that the pipe does not turn with the nut TN 81. To check that tightening takes place correctly. mark the nut TN 81 and the pipe.
用扳手旋转螺母 1 1/2 转并防止管子随螺母转动。

For easier. safe connection to stainless steel pipes. back off the nut TN 81 by a few turns and lubricate the threads and friction parts with an anti-seizing product (see fig.9.1).
为了更简便和安全安装不锈钢管子，可以旋开螺母一小转时使用螺纹和减少摩擦的润滑剂。

11. Checking
检查预安装

11.1

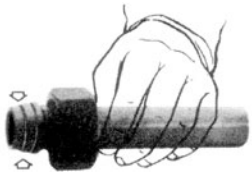

After prefitting unscrew the nut TN 81 and check that the cut on the pipe is uniform; it must form a collar of material in front of the first cutting edge of the ring TD 88.
旋开预安装螺母 TN81 检查管子上的切口是否均匀，可见在卡套 TD88 的第一条切线前有隆起。

12. Final Assembly
最终安装

12.1

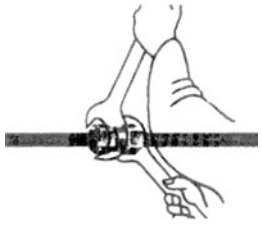

Screw the nut TN 81 (prefitted) by spanner (without extension) onto the body of the union until the point of resistance is met . then use a spanner (we reccomend use of an extension) to turn through ½ of a turn. supporting the union using the second spanner. See table on the side. Torque is available on demand.
将已预安装卡套的管端插入接头体内，紧紧顶住后用手拧紧螺母，然后使用开口扳手拧紧，直到感觉阻力急剧增大，再拧紧 1/2 即可，所需力矩请看下图所示。

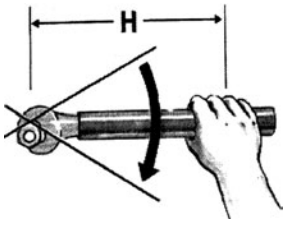

	H (mm)
22L	400
28L-20S	500
35L-25S	800
42L-30S	1000
38S	1200

12.2

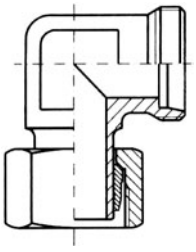

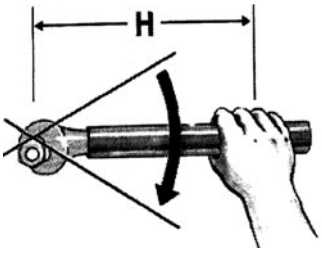

ATTENTION! FITTINGS WITH PREASSEMBLED CUTTING RING
Final assemby of all pre-assemlled fitting TN-119-120-121-126-132 is obtain after appropriate lubrication by tightening with dey (without Bxtensian) (preassembled) mit TN81 on the bady of another union until is ascertained a point of resistance, thon tishter with dey (we recommend use of an extension) for about 1/2 turn. See table on the side. Torgue is available on demand.
注意：管接头和预安装的卡套所有已经预装卡套的接头（TN119-120-121-126-132）在进行管路正式装配时，只需拧紧螺母，从力矩激增点起再拧 1/4 圈即可，所需力拒如左表格所示。
IT IS ABSOLUTELY FORBIDDEN THE ASSEMBLING OF THESE FITTINGS ON OTHER FITTINGS OTHER MARK DIFFERENT FROM RASTELLI.
绝对禁止安装这些接头跟除 RASTELLI 接头外的管件连接。

接头规格	扳手长度 H (mm)
22L	400
28L-20S	500
35L-25S	800
42L-30S	1000
38S	1200

12.3

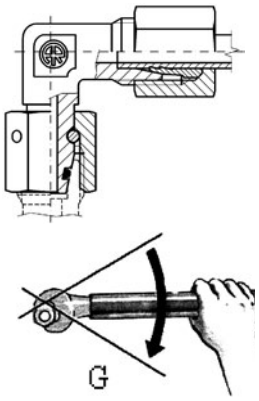

For final assembly of all the unions TN 419-420-421-426-432-498. after appropriate lubrication screw the prefitted nut TN 81 by hand onto the body of another union until the point of resistance is met. then tighten with a wrench by a further 1/4 turn (G).

卡套接头系列 TN-419-420-421-426-432-498 的最终安装，用手拧紧润滑过的螺母 TN81. 直到阻力激增为止，再用扳手继续拧紧 1/4 圈。

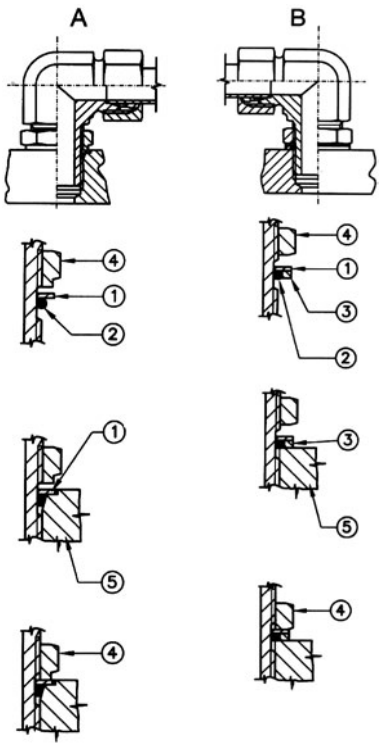

The final assembly of all connections TN 514-515-516-517 (Version A with UNF/UN thread Metric parallel thread DIN EN ISO 6149. Version B with BSP parallel Cyilindrical thread) is obtained as follows:TN514-515-516-517

（可调向接头版本 A 的 UNF/UN 螺纹和公制圆柱螺纹的 DIN EN ISO 6149 标准和版本 B 的 BSP 圆柱螺纹）的最终装配方式如下：

1. Screw back bulkhead nut ④ as for as it goes.
   将锁紧螺母向后旋。
2. O-Ring ② and fixed anti-extrusion ① should be at the upper end of the notch.
   将 O 型和垫圈放置在无螺纹端，尽可能的靠近螺母
3. Oil the O-Ring.
   O 型圈涂上润滑油。
4. In the versions with BSPP. Metric cylindrical (W) thread slip mobile ring ③ over O-Ring.
   BSPP 直螺纹和公制直螺纹要放入挡圈在 O 型圈上。
5. Manually screw the fitting into the screwing hole ⑤till mobile ring ③ or fixed anti-extrusion ① comes to rest.
   用手将接头旋入油口，直至接触挡圈或垫圈的底部。
6. To adjust in the wanted position turnback by maximum one turn.
   如需调整方向，最大反拧一圈。
7. Tighten bulkhead nut ④ completely while keeping the fitting body in the wanted position.
   保持接头体在正确的位置，并拧紧锁螺母。

13. Checking
安装检查

13.1

After final fitting unscrew the nut TN 81 and check that the cut on the pipe is uniform; it must form a collar of material in front of the first cutting edge of the ring TD 88. For stainless steel pipes. the collar of material is different structure of the material.
旋开卡套螺母，检查管子上是否有均匀的切口，有明显可见的隆起切口。不锈钢由于材质不同隆起的结构也不所不同。

14. Reassembly
重复安装

14.1

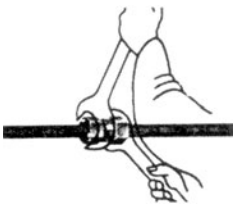

Whenever the pipe connections are dismantled. the nut TN 81 must be screwed tightly onto the union as during first installation (using the same force). supporting the union with a second spanner.
任何时候管子连接件拆除后，卡套螺母必须拧紧到第一次安装的位置并使用相同的扭力，可使用扳手再次拧紧。

FITTING REINFORCING RINGS TN 80 IN THE PIPE
使用加强衬套 TN80 在薄壁管子里。

15. Preparing the inside and outside of the pipe
管子准备工作

15.1

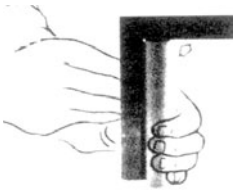

Cut the pipe at right angle. A maximum variation of 0.5° in relation to the pipe axis is permitted.
正确切割管子角度，最大允许角度偏差为 0.5°

15.2

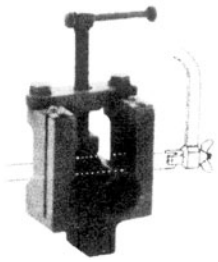

It is easier to cut the pipe at a right angle if a hacksaw is used with the special tool.
使用特殊的锯齿将更容易切除正确角度的管子。

CAUTION: Never use pipe cutters or cut-off saws which leave the pipe ends with abundant burrs and slanted cuts. Pipe ends with burrs or incorrect angles reduce the lifetime and sealing efficiency of the union.
注意：禁止使用管子切割机，因为切割机会在管子的端口留下刮痕和毛刺，这些残留物质将缩短接头体的使用寿命和密封性能。

15.3

Deburr the inside and outside of the pipe slightly. without damaging the mating surface - there must be no bevels.
清洁好管子端面，保持光滑并无破损。

16. Fitting
最终安装

16.1

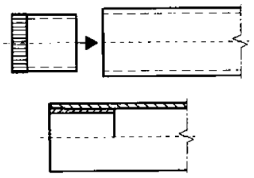

Insert the reinforcing ring TN 80 into the pipe as far as the start of the knurled part. Use a hammer to insert the whole of the reinforcing ring TN 80 until level with the end of the pipe.
套入加强衬套 TN80 直到隆起部位开始的地方，用铁锤使整个加强衬套完全到达管子底部。

GENERAL RULES TO BE OBSERVED

a) Small diameter pipes may be connected to the unions directly during assembly on the plant.
小直径管可以直接安装到接头体上。
b) For easier tightening. the lenght of the spanner may be increased up to 15 times the width of the hexagonal faces.
为了更易拧紧，扳手的长度应当增加到六角面宽度的 15 倍
c) After prefitting. for final assembly the nuts TN 81 can be tightened using a normal spanner.
预安装后，用常规扳手拧紧卡套螺母到最终安装
d) When assembling the plant. if the pipes are proportionally very long or particularly subject to stress. they must be supported and fixes by means of collars supplied and produced by RASTELLI itself. The range includes the whole range of sizes. in polypropylene. ultramide and aluminium.
Special care must be taken over the vibration of high pressure rubber hoses. if the user has decided. at his own risk. to use the DIN 2353 union intended for the connection of steel pipes.
在安装中，如果钢管的长度比例过长或特定的压力，就得借助于 Rastell 公司生产的管夹产品的支持，Rastell 的管夹产品函盖了所需的所有尺寸和材质（聚丙烯、聚丙胺胺、铝等）。
e) The tightening values in Nm for each individual diameter are available on request.
可根据客户需求扭力订制。

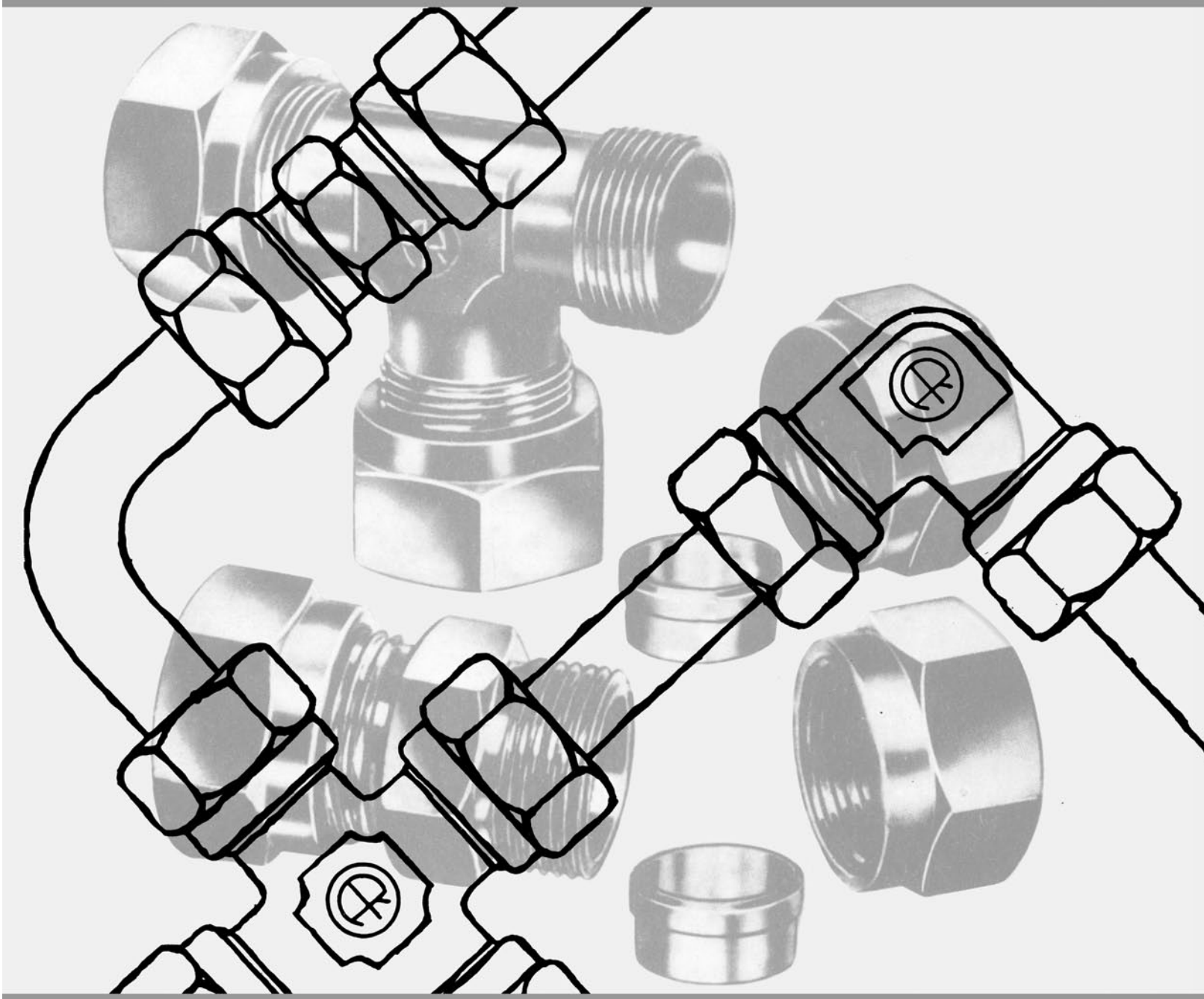

STAINLESS STEEL

不锈钢管材质管接头同样按照此目录选型

	Tubes for oleodynamic plants 公制精密钢管	Pag. 页码 **35**

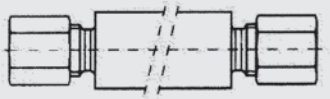

TN 117	Welding Bulkhead Connections 焊接式过壁直通接头	Pag. 页码 **38**

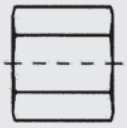

TN 81	Nuts 卡套螺母	Pag. 页码 **36**

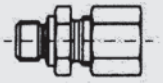

TN 92	Male Stud Couplings 直通管接头	Pag. 页码 **39/40**

TN 88 **TD 88**	Cutting Ring 双刃卡套	Pag. 页码 **36**

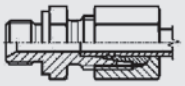

TN 92 **SV**	Male Stud Couplings SV 60° 英管螺纹锥密封端面管接头	Pag. 页码 **41/42**

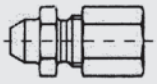

TN 91	Welding Bosses 焊接接头	Pag. 页码 **37**

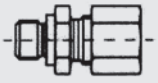

TN 92 **GG**	Male Stud Couplings rubber seal 外螺纹端面胶垫密封管接头	Pag. 页码 **43/44**

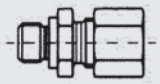			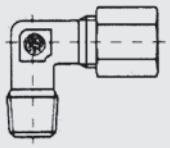		
TN 92 A	Male Stud fitting type A 英制管螺纹 A 型端面管接头	Pag. 页码 **45**	**TN 94**	Stud Elbows 终端角通接头 锥螺纹系列	Pag. 页码 **50/51**
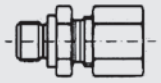			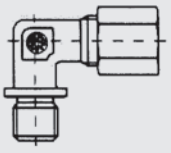		
TN 92 UNF/UN	Male Stud Couplings UNF/UN UNF/UN 端面直通接头	Pag. 页码 **46**	**TN 95**	Stud Elbows 终端直角接头 直螺纹系列	Pag. 页码 **52**
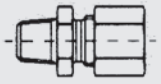			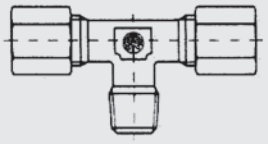		
TN 93	Male Stud Couplings 终端直通接头 锥螺纹系列	Pag. 页码 **47/48**	**TN 96**	Stud Branch Tees 终端三通接头 锥螺纹系列	Pag. 页码 **53**
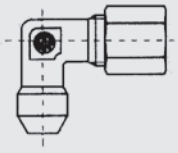			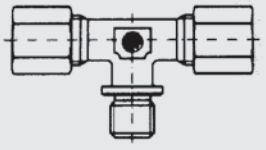		
TN 94W	Welding Elbows 焊接式直角接头	Pag. 页码 **49**	**TN 97**	Stud Branch Tees 终端三通接头 直螺纹系列	Pag. 页码 **54**

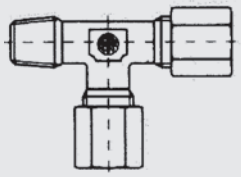

TN 127	Stud Barrel Tees 终端三通接头 / 锥螺纹系列	Pag. 页码 **55**

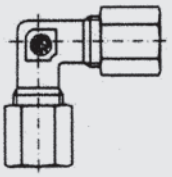

TN 99	Equal Elbows 中间连接直角接头	Pag. 页码 **59**

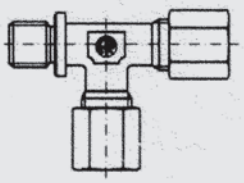

TN 129	Stud Barrel Tees 终端三通接头 直螺纹系列	Pag. 页码 **56**

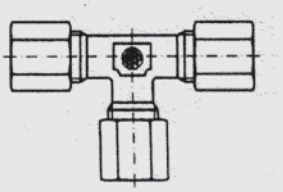

TN 100	Equal Tees 中间连接三通接头	Pag. 页码 **60**

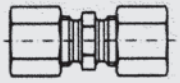

TN 98	Straight coupling 中间连接直接头	Pag. 页码 **57**

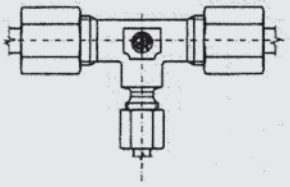

TN 100 R	Reduced-Tee 变径中间连接三通接头	Pag. 页码 **61/62**

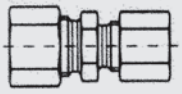

TN 98R	Reduced straight coupling 变径中间连接直接头	Pag. 页码 **58**

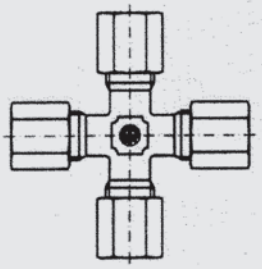

TN 101	Equal Crosses 中间连接四通接头	Pag. 页码 **63**

TN 102 **118**	Bulkhead nut 过壁螺母	Pag. 页码 **64**

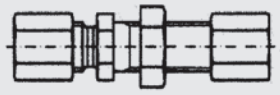

TN 102	Bulkhead Connections 过壁式直通接头	Pag. 页码 **65**

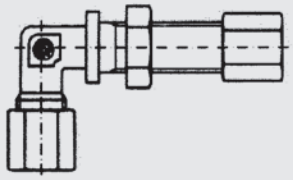

TN 118	Bulkhead Elbows 过壁式角通接头	Pag. 页码 **66**

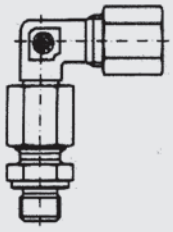

TN 114	Swivel Elbows 可调向直角接头（带接头体）	Pag. 页码 **67**

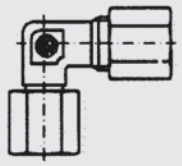

TN 119	Anschlußstutzen-Angular rotary fitting 可调向直角接头（不带接头体）	Pag. 页码 **68**

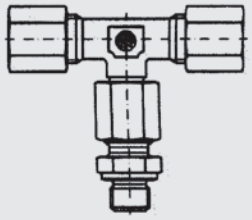

TN 115	Swivel Branch Tees 可调向 T 型三通接头（带接头体）	Pag. 页码 **69**

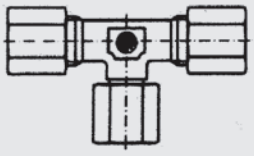

TN 120	Rotary T-fitting 可调向 T 型三通接头（不带接头体）	Pag. 页码 **70**

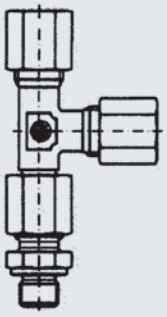

TN 116	Swivel Barrel Tees 可调向 L 型三通接头（带接头体）	Pag. 页码 **71**

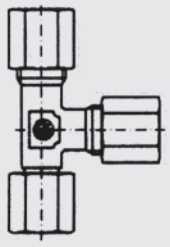			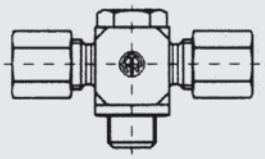		
TN 121	Rotary L-fitting 可调向 L 型三通接头（不带接头体）	Pag. 页码 **72**	**TN 136**	Double orientable fitting 双向铰接式接头	Pag. 页码 **79/80**
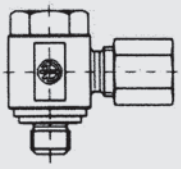			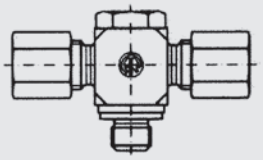		
TN 111	Banjos 铰接式接头	Pag. 页码 **73/74**	**TN 136 GG**	Double orientable fitting rubber seal 双向铰接式带 ED 圈接头	Pag. 页码 **81/82**
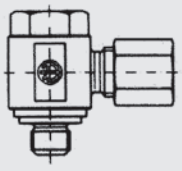			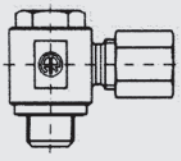		
TN 111 GG	Banjos rubber seal 铰接式带 ED 圈接头	Pag. 页码 **75/76**	**TN 131**	Banjos 铰接式接头	Pag. 页码 **83/84**
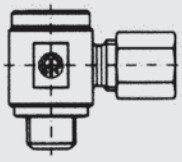			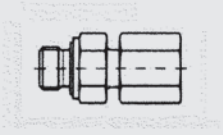		
TN 130	Rotary fitting without neck 可旋转铰接式接头	Pag. 页码 **77/78**	**TN 126 GG**	Stud/Standpipe Adaptors rubber seal 可调向直通接头	Pag. 页码 **85/86**

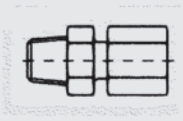			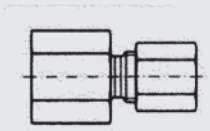		
TN 126 NPT	Stud/Standpipe Adaptors 可调向直通接头	Pag. 页码 **87**	**TN 103**	Gauge Couplings 压力表接头	Pag. 页码 **94**
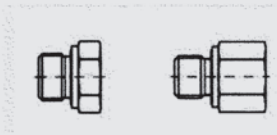			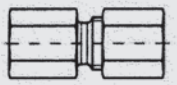		
TN 141 GG	Male/Female Stud Adaptors rubber seal 变径补芯带 ED 圈接头	Pag. 页码 **88**	**TN 147**	Female Stud Couplings 内螺纹接头	Pag. 页码 **95**
			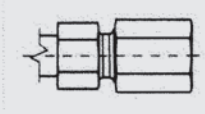		
TN 143	Male/Female Stud Adaptors 变径补芯接头	Pag. 页码 **89/90**	**TN 258**	Ring fitting Diesel injection feed 柴油机喷嘴防震接头	Pag. 页码 **96**
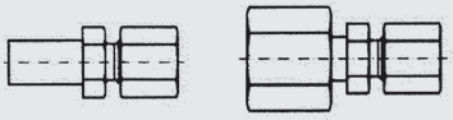			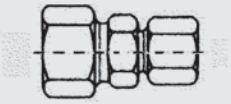		
TN 132	Standpipe/Tube Reducers 对接式变径接头	Pag. 页码 **91/93**	**TN 128**	Reduced Fittings T 型变径管接头	Pag. 页码 **97/98**

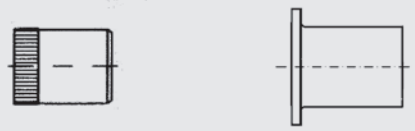

TN 80	Pipe inserts 管衬	Pag. 页码 **99**

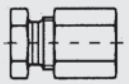

TN 296	Pipe plug 管端堵头	Pag. 页码 **103**

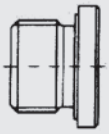

TN 185 GG	Inner hexagon plug seal 内六角堵头	Pag. 页码 **100**

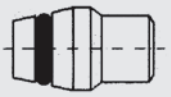

TN 324	Pipe plug for TN 87 connection with O-Ring seal 锥孔带 O 型圈堵头	Pag. 页码 **104**

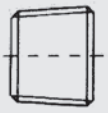

TN 192	Inner hexagon plug 内六角堵头	Pag. 页码 **101**

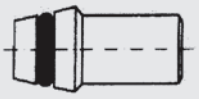

TN 299B	Welding nipples with O-ring seal 带 O 型密封圈的焊接接管	Pag. 页码 **107**

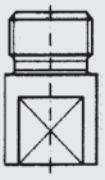

TN 195	Pre-assembly adaptor 卡套预安装接头	Pag. 页码 **102**

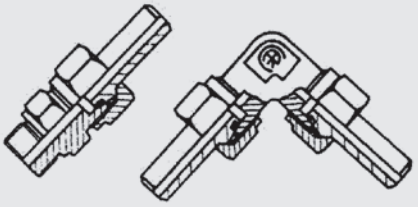

TN 300	Soldered nipples 焊接管接头	Pag. 页码 **108/109**

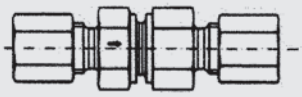			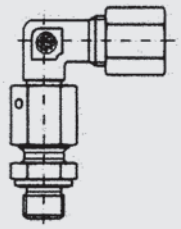		
TN 106	Non-return Valves 单向阀	Pag. 页码 **113**	**TN 414**	Swivel Elbows with O-Ring seal 可调式直角接头（带接头体）锥体带 O 型圈	Pag. 页码 **120**
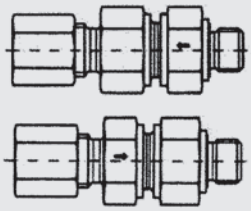			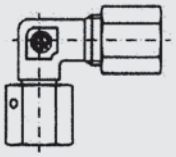		
TN 107 **TN 108**	Non-return valves rubber seal 带 ED 圈单向阀	Pag. 页码 **114/115**	**TN 419**	Angular rotary fitting with O-Ring seal 可调式直角接头 锥体带 O 型圈	Pag. 页码 **121**
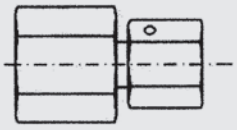			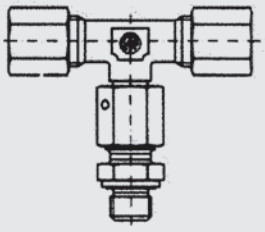		
TN 403	Gauge Couplings with O-Ring seal 压力表接头 锥体带 O 型圈	Pag. 页码 **118**	**TN 415**	Swivel Branch Tees with O-Ring seal 可调式三通接头（带接头体）锥体带 O 型圈	Pag. 页码 **122**
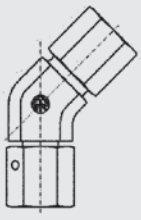			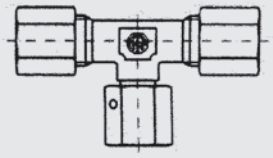		
TN 417	Rotary fitting 45° with O.ring seal 可调式 45° 角通接头锥体带 O 型圈	Pag. 页码 **119**	**TN 420**	Rotary fitting a Tees with O-Ring seal 可调式三通接头（不带接头体）锥体上带 O 型圈	Pag. 页码 **123**

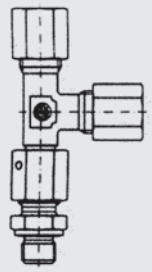			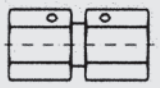		
TN 416	Swivel Barrel Tees with O-Ring seal 可调式 L 型管接头（带接头体）锥体带 O 型圈	Pag. 页码 **124**	**TN 498**	Straight coupling with O-Ring 可调式等径直通接头 锥体带 O 型圈	Pag. 页码 **130**
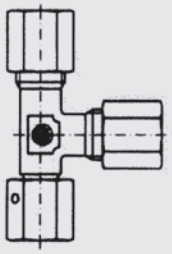			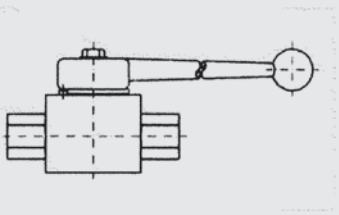		
TN 421	Rotary fitting a L with O-Ring seal 可调式 L 型管接头（不带接头体）锥体带 O 型圈	Pag. 页码 **125**	**TN KHB KHM**	Ball valve robinet 球阀	Pag. 页码 **132**
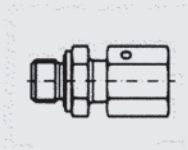			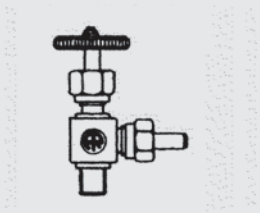		
TN 426	Stud standpipe adaptors Packing ring./O-Ring seal 可调式直通接头 锥体带 O 型圈	Pag. 页码 **126/127**	**TN 34**	Pressure gauge taps 压力表开关	Pag. 页码 **133**
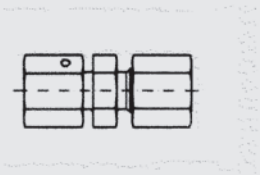			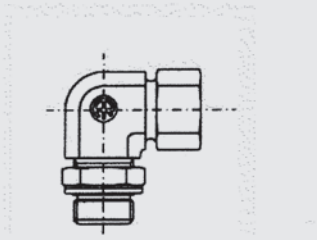		
TN 432	Standpipe/Tube Reducers with O-Ring seal 变径直通轻 / 重型管接头 锥体带 O 型圈	Pag. 页码 **128/129**	**TN 514**	Angular rotary fitting with bulkhead nut 可调向直角接头	Pag. 页码 **139 ÷ 142**

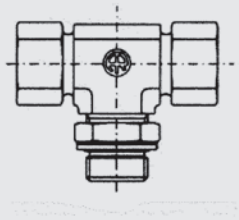			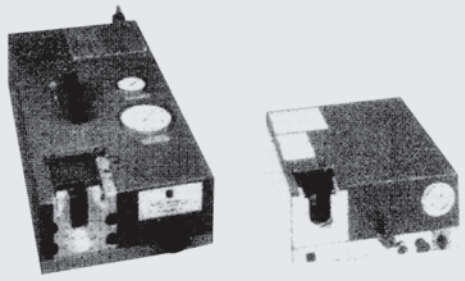		
TN 515	Rotary fitting a tees with bulkhead nut 可调向三通接头	Pag. 页码 **143 ÷ 146**	**TN 294 A** **TN 285 A**	Apparatus for preassembly rings 卡套预安装机	Pag. 页码 **157 ÷ 159**
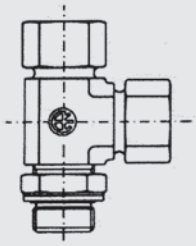					
TN 516	Rotary fitting a L with bulkhead nut 可调向 L 型三通接头	Pag. 页码 **147 ÷ 150**		Packing ring ED 圈	Pag. 页码 **160**
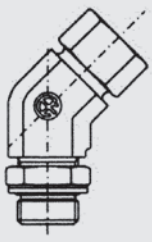					
TN 517	Rotary fitting a 45° with bulkhead nut 可调向 45° 角通接头	Pag. 页码 **151 ÷ 154**		OR O-ring O 型圈	Pag. 页码 **161**
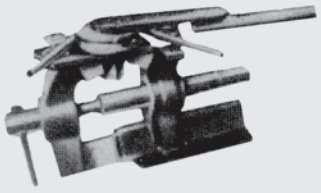			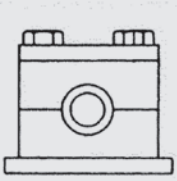		
TN 362	Pipe bending machine 弯管机	Pag. 页码 **156**		Brackets for pipes 管夹	Pag. 页码 **162 ÷ 176**

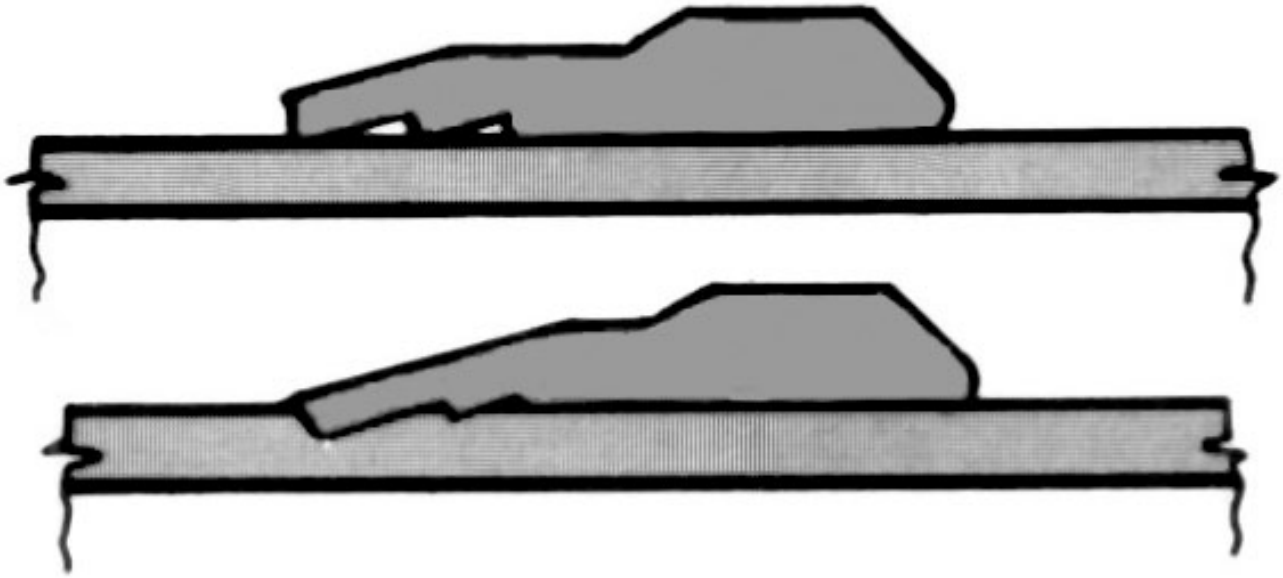

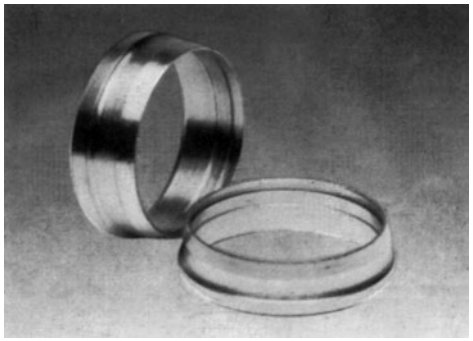

DOUBLE-CUTTING RINGS FOR
适用于最严格工作的双刃卡套TD 88

THE MOST EXACTING JOBS

For oleo-hydraulic installations and in the case of particularly heavy loads. the TD 88 ring gives the maximum reliability and security at very high pressures.
在液压装置和高负荷的情况下，TD88 在高压环境下提供最可靠的密封性和安全性。
The TD 88 ring's double-edged increases the re-sistance to vibrations and to impulses (drafts).
The incision of the two edges on the tube also per-mits an increase of resistance to slipping.
The TD 88 ring used on the RASTELLI DIN 2353 pipe-fittings isperfectly inter-changeable with the TN 88 type of edged ring.
When you require the ring with the double cutting ring. simply replace the designation code TN with TD when ordering.
TD88 卡套的双切割环增强抗震性和促进脉冲同时双切口环也起到防滑的作用。
Rastelli DIN2353 接头的 TD88 卡套可以跟 TN88 进行完美互换，在订货时请以代号 TN 和 TD 区分单卡套和双卡套。
Example:
如下:
TN 92-12 LR with one cutting ring TN 88
TN 92-12 LR 表示单卡套
TD 92-12 LR with double cutting ring TD 88
TD 92-12 LR 表示双刃卡套

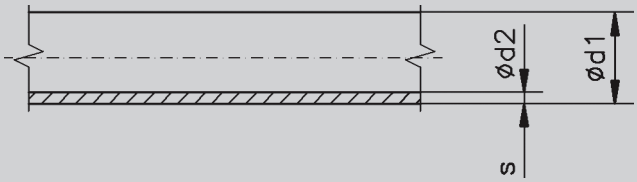

Tubes for oleodynamic plants

公制精密钢管

Dimensions and tolerances according to DIN 2391 – UNI EN ISO 10305-4 (ISO 3304). All our pipes are normalised in controlled atmosphere and submitted to non-destructive controls. i.e. ultrasound tests. (75 HRB max for St. 37.4 – 85 HRB max for stainless steel max).

尺寸和公差按标准 DIN2391 执行，所有钢管经受无氧退火和无损检测。比如，超声波测试。

钢 ST37.5 NBK 正火　硬度：75HBR

不锈钢 316TI　　硬度：85HBR

系列	Ø 订货型号	额定压力	爆破压力	钢管壁厚 /mm	$Ød_1 \times Ød_2$	重量 kg. / m
超轻型 LL	4 LL	522	2850	1	4 × 2	0.074
	5 LL	431	2120	1	5 × 3	0.099
	6 LL	509	1385	1	6 × 4	0.123
	8 LL	367	1000	1	8 × 6	0.173
	10 LL	287	783	1	10 × 8	0.222
	12 LL	367	1000	1.5	12 × 9	0.388
轻型 L	6 L	509	1385	1	6 × 4	0.123
	8 L	367	1000	1	8 × 6	0.173
	10 L	287	783	1	10 × 8	0.222
	10 L	450	1229	1.5	10 × 7	0.314
	12 L	367	1000	1.5	12 × 9	0.388
	15 L	287	783	1.5	15 × 12	0.499
	15 L	394	1075	2	15 × 11	0.641
	18 L	236	643	1.5	18 × 15	0.610
	18 L	322	878	2	18 × 14	0.789
	22 L	259	706	2	22 × 18	0.986
	28 L	200	545	2	28 × 24	1.280
	35 L	243	663	3	35 × 29	2.370
	42 L	200	545	3	42 × 36	2.890
重型 S	6 S	825	2250	1.5	6 × 3	0.166
	8 S	583	1589	1.5	8 × 5	0.240
	8 S	825	2250	2	8 × 4	0.296
	10 S	450	1229	1.5	10 × 7	0.314
	10 S	630	1714	2	10 × 6	0.395
	12 S	508	1385	2	12 × 8	0.493
	12 S	660	1800	2.5	12 × 7	0.586
	14 S	426	1161	2	14 × 10	0.592
	14 S	684	1865	3	14 × 8	0.814
	16 S	367	1000	2	16 × 12	0.691
	16 S	471	1286	2.5	16 × 11	0.832
	20 S	367	1000	2.5	20 × 15	1.080
	20 S	451	1229	3	20 × 14	1.260
	25 S	287	783	2.5	25 × 20	1.390
	25 S	484	1321	4	25 × 17	2.070
	30 S	287	783	3	30 × 24	2.000
	30 S	400	1075	4	30 × 22	2.560
	38 S	388	1059	5	38 × 28	4.070

The measurements in bold type are normally expected to be in stock / 粗体的尺寸有库存

温度范围：钢 ST St. 37.4 DIN 1630　40℃ to +120℃　316Ti　-60℃　to +20℃

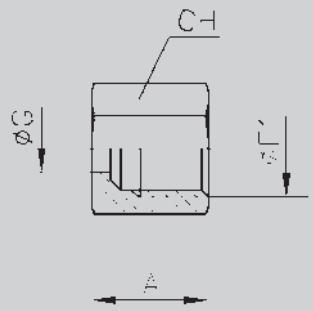

TN 81

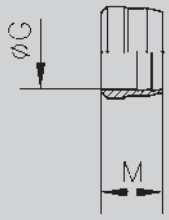

TN/TD 88

TN 81

Nuts
卡套螺母

TN/TD 88

Cutting Rings
卡套

系列	Ø 钢管外径 d_1	公称压力 PN	尺寸 Ø F1	Ø G	A	M	CH	订货型号	重量 kg./100 件	订货型号	重量 kg./100 件
超轻型 LL	4	100	8 × 1	4	11	6	10	TN 81 - 4 LL	0.4	TN 88 - 4 LL	0.05
	5		10 × 1	5	11.5	7	12	TN 81 - 5 LL	0.5	TN 88 - 5 LL	0.07
	6		10 × 1	6	11.5	7	12	TN 81- 6 LL	0.5	TN 88 - 6 LL	0.09
	8		12 × 1	8	12	7	14	TN 81 - 8 LL	0.7	TN 88 - 8 LL	0.11
	10		14 × 1	10	12.5	7	17	TN 81 - 10 LL	1.2	TN 88 - 10 LL	0.14
	12		16 × 1	12	13	7.5	19	TN 81 - 12 LL	1.5	TN 88 - 12 LL	0.16
轻型 L	6	315	12 × 1.5	6	14.5	9.5	14	TN 81 - 6 L	0.9	TD 88 - 6 LS	0.13
	8		14 × 1.5	8	14.5	9.5	17	TN 81 - 8 L	1.2	TD 88 - 8 LS	0.19
	10		16 × 1.5	10	15.5	10	19	TN 81 - 10 L	2.1	TD 88 - 10 LS	0.24
	12		18 × 1.5	12	15.5	10	22	TN 81 - 12 L	2.4	TD 88 - 12 LS	0.31
	15		22 × 1.5	15	17	10	27	TN 81 - 15 L	3.9	TD 88 - 15 L	0.41
	18		26 × 1.5	18	18	10.5	32	TN 81 - 18 L	5.9	TD 88 - 18 L	0.46
	22	160	30 × 2	22	20	11	36	TN 81 - 22 L	7.9	TD 88 - 22 L	0.60
	28		36 × 2	28	21	11	41	TN 81 - 28 L	8.4	TD 88 - 28 L	0.75
	35		45 × 2	35	24	13.5	50	TN 81 - 35 L	12.9	TD 88 - 35 L	1.60
	42		52 × 2	42	24	13.5	60	TN 81 - 42 L	20.9	TD 88 - 42 L	2.10
重型 S	6	630	14 × 1.5	6	16.5	9.5	17	TN 81 - 6 S	1.4	TD 88 - 6 LS	0.13
	8		16 × 1.5	8	16.5	9.5	19	TN 81 - 8 S	1.6	TD 88 - 8 LS	0.19
	10		18 × 1.5	10	17.5	10	22	TN 81 - 10 S	3.1	TD 88 - 10 LS	0.24
	12		20 × 1.5	12	17.5	10	24	TN 81 - 12 S	3.6	TD 88 - 12 LS	0.31
	14		22 × 1.5	14	20.5	10	27	TN 81 - 14 S	5.1	TD 88 - 14 S	0.36
	16	400	24 × 1.5	16	20.5	10.5	30	TN 81 - 16 S	6.1	TD 88 - 16 S	0.41
	20		30 × 2	20	24	13	36	TN 81 - 20 S	9.4	TD 88 - 20 S	0.85
	25		36 × 2	25	27	13	46	TN 81 - 25 S	19.5	TD 88 - 25 S	1.06
	30		42 × 2	30	29	13.5	50	TN 81 - 30 S	21.5	TD 88 - 30 S	1.60
	38	315	52 × 2	38	32.5	13.5	60	TN 81 - 38 S	31.0	TD 88 - 38 S	2.00

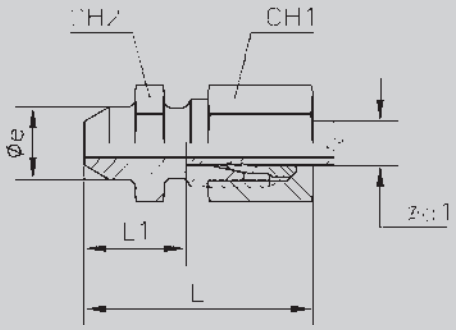

TN 91

Welding Bosses

焊接接头

系列	Ø 钢管外径 d_1	公称压力 PN	尺寸						订货型号	重量 kg./100 件
			L	L1	Ø e	CH1	CH2			
轻型 L	6	315	29	14	10	14	12		TN 91 - 6 L	2.5
	8		31	16	12	17	14		TN 91 - 8 L	3.6
	10		33	18	14	19	17		TN 91 - 10 L	4.7
	12		33	18	16	22	19		TN 91 - 12 L	6.3
	15		37	22	19	27	22		TN 91 - 15 L	8.4
	18		40	23.5	22	32	27		TN 91 - 18 L	13.9
	22	160	45	28.5	27	36	32		TN 91 - 22 L	18.1
	28		47	30.5	32	41	41		TN 91 - 28 L	30.2
	35		54	32.5	40	50	46		TN 91 - 35 L	37.7
	42		58	35	46	60	55		TN 91 - 42 L	64.1
重型 S	6	630	34	19	11	17	14		TN 91 - 6 S	3.2
	8		36	21	13	19	17		TN 91 - 8 S	4.9
	10		39	22.5	15	22	19		TN 91 - 10 S	7.2
	12		41	24.5	17	24	22		TN 91 - 12 S	8.3
	14		45	27	19	27	24		TN 91 - 14 S	10.8
	16	400	45	26.5	21	30	27		TN 91 - 16 S	14.4
	20		51	29.5	26	36	32		TN 91 - 20 S	21.8
	25		56	32	31	46	41		TN 91 - 25 S	37.7
	30		62	35.5	36	50	46		TN 91 - 30 S	44.9
	38	315	69	38	44	60	55		TN 91 - 38 S	68.4

Overall sizes are with closed fitting.
总长为预安装后的长度。

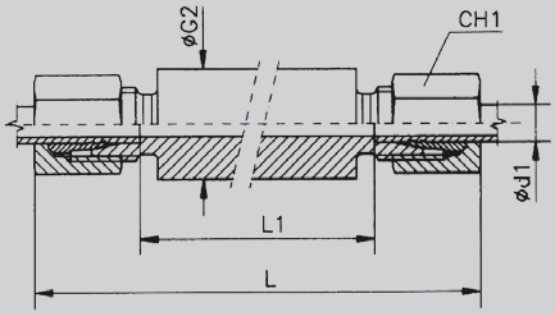

TN 117

Welding Bulkhead Connections
焊接式过壁直通接头

系列	Ø 钢管外径 d_1	公称压力 PN	尺寸					订货型号	重量 kg./100 件
			Ø G2	L	L1	CH1			
轻型 L	6	315	18	85	56	14		TN 117 - 6 L	13.1
	8		20	85	56	17		TN 117 - 8 L	16.2
	10		22	87	58	19		TN 117 - 10 L	19.5
	12		25	87	58	22		TN 117 - 12 L	24.1
	15		28	100	70	27		TN 117 - 15 L	35.3
	18		32	101	69	32		TN 117 - 18 L	46.9
	22	160	36	105	73	36		TN 117 - 22 L	58.2
	28		40	106	73	41		TN 117 - 28 L	66.0
	35		50	114	71	50		TN 117 - 35 L	102.9
	42		60	115	70	60		TN 117 - 42 L	148.1
重型 S	6	630	20	89	60	17		TN 117 - 6 S	16.9
	8		22	89	60	19		TN 117 - 8 S	20.4
	10		25	91	59	22		TN 117 - 10 S	27.0
	12		28	91	59	24		TN 117 - 12 S	33.1
	14		30	107	72	27		TN 117 - 14 S	44.7
	16	400	35	107	71	30		TN 117 - 16 S	57.8
	20		38	114	71	36		TN 117 - 20 S	73.2
	25		45	120	72	46		TN 117 - 25 S	114.6
	30		50	126	73	50		TN 117 - 30 S	134.4
	38	315	60	133	72	60		TN 117 - 38 S	191.3

Overall sizes are with closed fitting.
总长为预安装后的长度。

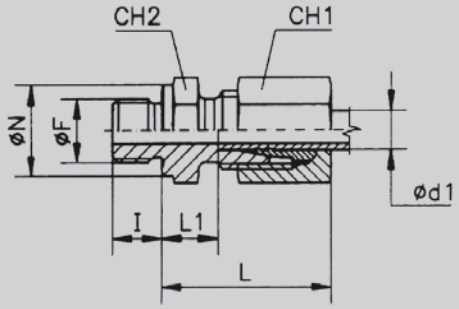

TN 92

Male Stud Couplings
端直通管接头
可连接螺纹形式：英制圆柱螺纹
公制圆柱螺纹
密封形式：DIN 3852第二部分的硬性密封结构

系列	Ø 钢管外径 d_1	PN PE	b) I	L	b) L1	CH1	R				M				重量 kg./100 件
							Ø F	Ø N	CH2	订货型号	Ø F	Ø N	CH2	订货型号	
轻型 L	6	PN 315	8	23	8.5	14	1/8″	14	14	TN 92 - 6 LR	10 × 1	14	14	TN 92 - 6 LM	2.5
	8		12	25	10	17	1/4″	18	19	TN 92 - 8 LR	12 × 1.5	17	17	TN 92 - 8 LM	4.5
	8		12	26	11.5	17	3/8″	22	22	TN 92 - 8 LR 3/8″	–	–	–	–	6.0
	10		12	26	11	19	1/4″	18	19	TN 92 - 10 LR	14 × 1.5	19	19	TN 92 - 10 LM	4.7
	10		12	27	12.5	19	3/8″	22	22	TN 92 - 10 LR 3/8″	–	–	–	–	6.0
	12		12	27	12	22	1/4″	18	19	TN 92 - 12 LR 1/4″	–	–	–	–	6.1
	12		12	27	12.5	22	3/8″	22	22	TN 92 - 12 LR	16 × 1.5	21	22	TN 92 - 12 LM	6.5
	12		14	28	13	22	1/2″	26	27	TN 92 - 12 LR 1/2″	–	–	–	–	9.5
	15		14	29	14	27	1/2″	26	27	TN 92 - 15 LR	18 × 1.5	23	24	TN 92 - 15 LM	11.5
	18		14	31	14.5	32	1/2″	26	27	TN 92 - 18 LR	22 × 1.5	27	27	TN 92 - 18 LM	13.0
	22	PN 160	16	33	16.5	36	3/4″	32	32	TN 92 - 22 LR	26 × 1.5	31	32	TN 92 - 22 LM	18.0
	28		18	34	17.5	41	1″	39	41	TN 92 - 28 LR	33 × 2	39	41	TN 92 - 28 LM	25.0
	35		20	39	17.5	50	1″ 1/4	49	50	TN 92 - 35 LR	42 × 2	49	50	TN 92 - 35 LM	41.0
	42		22	42	19	60	1″ 1/2	55	55	TN 92 - 42 LR	48 × 2	55	55	TN 92 - 42 LM	46.0
重型 S	6	a) PE 630	12	28	13	17	1/4″	18	19	TN 92 - 6 SR	12 × 1.5	17	17	TN 92 - 6 SM	5.2
	8		12	30	15	19	1/4″	18	19	TN 92 - 8 SR	14 × 1.5	19	19	TN 92 - 8 SM	6.0
	10		12	31	15	22	3/8″	22	22	TN 92 - 10 SR	16 × 1.5	21	22	TN 92 - 10 SM	9.0
	12		12	33	17	24	3/8″	22	22	TN 92 - 12 SR	18 × 1.5	23	24	TN 92 - 12 SM	10.2
	12		14	34	17.5	24	1/2″	26	27	TN 92 - 12 SR 1/2″	–	–	–	–	13.5
	14		14	37	19	27	1/2″	26	27	TN 92 - 14 SR	20 × 1.5	25	27	TN 92 - 14 SM	15.2
	16	PE 400	14	37	18.5	30	1/2″	26	27	TN 92 - 16 SR	22 × 1.5	27	27	TN 92 - 16 SM	16.0
	20		16	42	20.5	36	3/4″	32	32	TN 92 - 20 SR	27 × 2	32	32	TN 92 - 20 SM	27.0
	25		18	47	23	46	1″	39	41	TN 92 - 25 SR	33 × 2	39	41	TN 92 - 25 SM	49.0
	30	PE 250	20	50	23.5	50	1″ 1/4	49	50	TN 92 - 30 SR	42 × 2	49	50	TN 92 - 30 SM	66.0
	38		22	57	26	60	1″ 1/2	55	55	TN 92 - 38 SR	48 × 2	55	55	TN 92 - 38 SM	92.0

Overall sizes are with closed fitting.
总长为预安装后的长度。
b) TN 92-15 LM - I=12; L1 = 13.5 b) TN 2-15 LM-I=12; L1=13.5
a) Safety factor=2 (Thread Metric parallel)
安全系数 =2（公制螺纹）

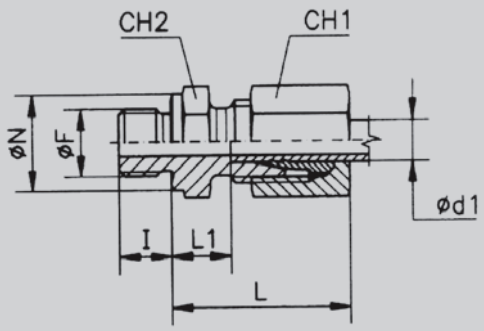

SPECIAL FITTINGS
特制接头

TN 92

Male Stud Couplings
端直通管接头
可连接螺纹形式：英制圆柱螺纹
公制圆柱螺纹
密封形式：DIN 3852第二部分的硬性密封结构

系列	Ø 钢管外径 d_1	PN PE	I	L	L1	CH1	R				M				重量 kg./100 件
							Ø F	Ø N	CH2	订货型号	Ø F	Ø N	CH2	订货型号	
轻型 L	6	PN 315	12	25	10	14	1/4″	18	19	TN 92 - 6 LR 1/4″	–	–	–	–	3.5
	6		12	26	11.5	14	3/8″	22	22	TN 92 - 6 LR 3/8″	–	–	–	–	5.6
	6		14	27	12	14	1/2″	26	27	TN 92 - 6 LR 1/2″	–	–	–	–	7.3
	8		8	24	8.5	17	1/8″	14	14	TN 92 - 8 LR 1/8″	–	–	–	–	3.1
	8		14	27	12	17	1/2″	26	27	TN 92 - 8 LR 1/2″	–	–	–	–	9.0
	8		12	25	10	17	–	–	–	–	14 × 1.5	19	19	TN 92 - 8 LM 14 × 1.5	5.5
	8		12	26	11.5	17	–	–	–	–	16 × 1.5	21	22	TN 92 - 8 LM 16 × 1.5	5.8
	8		12	26	11.5	17	–	–	–	–	18 × 1.5	23	24	TN 92 - 8 LM 18 × 1.5	6.7
	10		8	26	11	19	1/8″	14	17	TN 92 - 10 LR 1/8″	–	–	–	–	4.0
	10		12	27	12	19	–	–	–	–	16 × 1.5	21	22	TN 92 - 10 LM 16 × 1.5	6.0
	10		12	27	12.5	19	–	–	–	–	18 × 1.5	23	24	TN 92 - 10 LM 18 × 1.5	7.0
	10		14	28	13	19	1/2″	26	27	TN 92 - 10 LR 1/2″	22 × 1.5	27	27	TN 92 - 10 LM 22 × 1.5	9.2
	12		16	29	14	22	3/4″	32	32	TN 92 - 12 LR 3/4″	–	–	–	–	14.7
	12		12	26	11	22	–	–	–	–	14 × 1.5	19	19	TN 92 - 12 LM 14 × 1.5	5.7
	12		12	27	12.5	22	–	–	–	–	18 × 1.5	23	24	TN 92 - 12 LM 18 × 1.5	7.4
	12		14	29	14	22	–	–	–	–	22 × 1.5	27	27	TN 92 - 12 LM 22 × 1.5	10.3
	15		12	29	13.5	27	3/8″	22	24	TN 92 - 15 LR 3/8″	16 × 1.5	21	24	TN 92 - 15 LM 16 × 1.5	9.7
	15		16	30	15	27	3/4″	32	32	TN 92 - 15 LR 3/4″	–	–	–	–	16.1
	15		14	30	15	27	–	–	–	–	22 × 1.5	27	27	TN 92 - 15 LM 22 × 1.5	12.1
	18		12	29	14	32	3/8″	22	27	TN 92 - 18 LR 3/8″	18 × 1.5	23	27	TN 92 - 18 LM 18 × 1.5	13.3
	18		16	30	14.5	32	3/4″	32	32	TN 92 - 18 LR 3/4″	–	–	–	–	17.3
	18		16	32	16.5	32	–	–	–	–	26 × 1.5	31	32	TN 92 - 18 LM 26 × 1.5	17.9
	22	PN 160	14	33	16.5	36	1/2″	26	32	TN 92 - 22 LR 1/2″	22 × 1.5	27	32	TN 92 - 22 LM 22 × 1.5	17.7
	22		18	34	17.5	36	1″	39	41	TN 92 - 22 LR 1″	–	–	–	–	27.8
	28		16	34	17.5	41	3/4″	32	41	TN 92 - 28 LR 3/4″	–	–	–	–	25.6
	35		18	39	17.5	50	1″	39	46	TN 92 - 35 LR 1″	–	–	–	–	37.8
重型 S	6	PE 630	14	33	18	17	1/2″	26	27	TN 92 - 6 SR 1/2″	–	–	–	–	10.8
	8		12	30	15.5	19	3/8″	22	22	TN 92 - 8 SR 3/8″	–	–	–	–	8.0
	10		12	31	14.5	22	1/4″	18	19	TN 92 - 10 SR 1/4″	–	–	–	–	7.5
	10		14	34	17.5	22	1/2″	26	27	TN 92 - 10 SR 1/2″	–	–	–	–	12.9
	10		12	31	15.5	22	–	–	–	–	18 × 1.5	23	24	TN 92 - 10 SM 18 × 1.5*	8.6
	12		12	33	16.5	24	1/4″	18	22	TN 92 - 12 SR 1/4″	–	–	–	–	9.3
	12		14	34	17.5	24	–	–	–	–	22 × 1.5	27	27	TN 92 - 12 SM 22 × 1.5*	13.0
	14		12	36	18.5	27	3/8″	22	24	TN 92 - 14 SR 3/8″	–	–	–	–	12.8
	16	PE 400	12	36	18	30	3/8″	22	27	TN 92 - 16 SR 3/8″	18 × 1.5	23	27	TN 92 - 16 SM 18 × 1.5	15.3
	16		16	39	20.5	30	3/4″	32	32	TN 92 - 16 SR 3/4″	–	–	–	–	22.6
	20		14	42	20.5	36	1/2″	26	32	TN 92 - 20 SR 1/2″	–	–	–	–	24.3
	25		16	47	23	46	3/4″	32	41	TN 92 - 25 SR 3/4″	27 × 2	32	41	TN 92 - 25 SM 27 × 2	46.5
	30	PE 250	18	50	23.5	50	1″	39	46	TN 92 - 30 SR 1″	–	–	–	–	57.8
	38		20	57	26	60	1″ 1/4	49	55	TN 92 - 38 SR 1″ 1/4	–	–	–	–	91.9

Overall sizes are with closed fitting.
总长为预安装后的长度。
* Safety factor = 2　　安全系数 =2

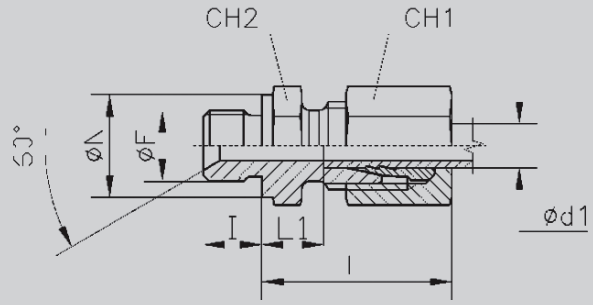

TN 92 SV

Male Stud Couplings SV 60°
英管螺纹60° 锥密封端面管接头
可连接螺纹形式：英制圆柱螺纹
公制圆柱螺纹
密封形式：DIN 3852第二部分硬性密封结构

系列	Ø 钢管外径 d_1	公称压力 PN PE	尺寸				R				M				重量 kg./100 件
			b) l	L	b) L1	CH1	Ø F	Ø N	CH2	订货型号	Ø F	Ø N	CH2	订货型号	
轻型 L	6	PN 315	8	23	8.5	14	1/8″	14	14	TN 92 SV - 6 LR	10 × 1	14	14	TN 92 SV - 6 LM	2.5
	8		12	25	10	17	1/4″	18	19	TN 92 SV - 8 LR	12 × 1.5	17	17	TN 92 SV - 8 LM	4.5
	8		12	26	11.5	17	3/8″	22	22	TN 92 SV - 8 LR 3/8″	–	–	–	–	6.0
	10		12	26	11	19	1/4″	18	19	TN 92 SV - 10 LR	14 × 1.5	19	19	TN 92 SV - 10 LM	4.7
	10		12	27	12.5	19	3/8″	22	22	TN 92 SV - 10 LR 3/8″	–	–	–	–	6.0
	12		12	27	12	22	1/4″	18	19	TN 92 SV - 12 LR 1/4″	–	–	–	–	6.1
	12		12	27	12.5	22	3/8″	22	22	TN 92 SV - 12 LR	16 × 1.5	21	22	TN 92 SV - 12 LM	6.5
	12		14	28	13	22	1/2″	26	27	TN 92 SV - 12 LR 1/2″	–	–	–	–	9.5
	15		14	29	14	27	1/2″	26	27	TN 92 SV - 15 LR	18 × 1.5	23	24	TN 92 SV - 15 LM	11.5
	18		14	31	14.5	32	1/2″	26	27	TN 92 SV - 18 LR	22 × 1.5	27	27	TN 92 SV - 18 LM	13.0
	22	PN 160	16	33	16.5	36	3/4″	32	32	TN 92 SV - 22 LR	26 × 1.5	31	32	TN 92 SV - 22 LM	18.0
	28		18	34	17.5	41	1″	39	41	TN 92 SV - 28 LR	33 × 2	39	41	TN 92 SV - 28 LM	25.0
	35		20	39	7.5	50	1″ 1/4	49	50	TN 92 SV - 35 LR	42 × 2	49	50	TN 92 SV - 35 LM	41.0
	42		22	42	19	60	1″ 1/2	55	55	TN 92 SV - 42 LR	48 × 2	55	55	TN 92 SV - 42 LM	46.0
重型 S	6	a) PE 630	12	28	13	17	1/4″	18	19	TN 92 SV - 6 SR	12 × 1.5	17	17	TN 92 SV - 6 SM	5.2
	8		12	30	15	19	1/4″	18	19	TN 92 SV - 8 SR	14 × 1.5	19	19	TN 92 SV - 8 SM	6.0
	10		12	31	15	22	3/8″	22	22	TN 92 SV - 10 SR	16 × 1.5	21	22	TN 92 SV - 10 SM	9.0
	12		12	33	17	24	3/8″	22	22	TN 92 SV - 12 SR	18 × 1.5	23	24	TN 92 SV - 12 SM	10.2
	12		14	34	17.5	24	1/2″	26	27	TN 92 SV - 12 SR 1/2″	–	–	–	–	13.5
	14		14	37	19	27	1/2″	26	27	TN 92 SV - 14 SR	20 × 1.5	25	27	TN 92 SV - 14 SM	15.2
	16	PE 400	14	37	18.5	30	1/2″	26	27	TN 92 SV - 16 SR	22 × 1.5	27	27	TN 92 SV - 16 SM	16.0
	20		16	42	20.5	36	3/4″	32	32	TN 92 SV - 20 SR	27 × 2	32	32	TN 92 SV - 20 SM	27.0
	25		18	47	23	46	1″	39	41	TN 92 SV - 25 SR	33 × 2	39	41	TN 92 SV - 25 SM	49.0
	30	PE 250	20	50	23.5	50	1″ 1/4	49	50	TN 92 SV - 30 SR	42 × 2	49	50	TN 92 SV - 30 SM	66.0
	38		22	57	26	60	1″ 1/2	55	55	TN 92 SV - 38 SR	48 × 2	55	55	TN 92 SV - 38 SM	92.0

Overall sizes are with closed fitting.
总长为预安装后的长度。
b) TN 92-15 LM - l=12; L1 = 13.5
a) Safety factor = 2 (Thread Metric parallel)
安全系数 =2（公制螺纹）

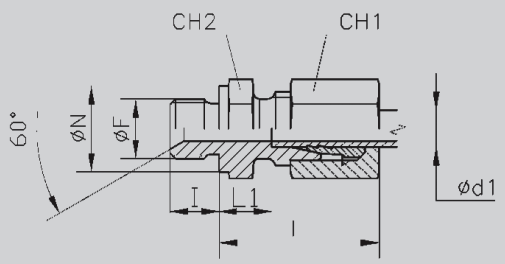

SPECIAL FITTINGS
特制接头

TN 92 SV

Male Stud Couplings SV 60°
英管螺纹60° 锥密封端面管接头
可连接螺纹形式：英制圆柱螺纹
公制圆柱螺纹
密封形式：DIN 3852第二部分硬性密封结构

系列	Ø 钢管外径 d_1	公称压力 PN PE	尺寸 l	L	L1	CH1	R ØF	ØN	CH2	订货型号	M ØF	ØN	CH2	订货型号	重量 kg./100 件
轻型 L	6	PN 315	12	25	10	14	1/4″	18	19	TN 92 SV - 6 LR 1/4″	–	–	–	–	3.5
	6		12	26	11.5	14	3/8″	22	22	TN 92 SV - 6 LR 3/8″	–	–	–	–	5.6
	6		14	27	12	14	1/2″	26	27	TN 92 SV - 6 LR 1/2″	–	–	–	–	7.3
	8		8	24	8.5	17	1/8″	14	14	TN 92 SV - 8 LR 1/8″	–	–	–	–	3.1
	8		14	27	12	17	1/2″	26	27	TN 92 SV - 8 LR 1/2″	–	–	–	–	9.0
	8		12	25	10	17	–	–	–	–	14 × 1.5	19	19	TN 92 SV - 8 LM 14 × 1.5	5.5
	8		12	26	11.5	17	–	–	–	–	16 × 1.5	21	22	TN 92 SV - 8 LM 16 × 1.5	5.8
	8		12	26	11.5	17	–	–	–	–	18 × 1.5	23	24	TN 92 SV - 8 LM 18 × 1.5	6.7
	10		8	26	11	19	1/8″	14	17	TN 92 SV - 10 LR 1/8″	–	–	–	–	4.0
	10		12	27	12	19	–	–	–	–	16 × 1.5	21	22	TN 92 SV - 10 LM 16 × 1.5	6.0
	10		12	27	12.5	19	–	–	–	–	18 × 1.5	23	24	TN 92 SV - 10 LM 18 × 1.5	7.0
	10		14	28	13	19	1/2″	26	27	TN 92 SV - 10 LR 1/2″	22 × 1.5	27	27	TN 92 SV - 10 LM 22 × 1.5	9.2
	12		16	29	14	22	3/4″	32	32	TN 92 SV - 12 LR 3/4″	–	–	–	–	14.7
	12		12	26	11	22	–	–	–	–	14 × 1.5	19	19	TN 92 SV - 12 LM 14 × 1.5	5.7
	12		12	27	12.5	22	–	–	–	–	18 × 1.5	23	24	TN 92 SV - 12 LM 18 × 1.5	7.4
	12		14	29	14	22	–	–	–	–	22 × 1.5	27	27	TN 92 SV - 12 LM 22 × 1.5	10.3
	15		12	29	13.5	27	3/8″	22	24	TN 92 SV - 15 LR 3/8″	16 × 1.5	21	24	TN 92 SV - 15 LM 16 × 1.5	9.7
	15		16	30	15	27	3/4″	32	32	TN 92 SV - 15 LR 3/4″	–	–	–	–	16.1
	15		14	30	15	27	–	–	–	–	22 × 1.5	27	27	TN 92 SV - 15 LM 22 × 1.5	12.1
	18		12	29	14	32	3/8″	22	27	TN 92 SV - 18 LR 3/8″	18 × 1.5	23	27	TN 92 SV - 18 LM 18 × 1.5	13.3
	18		16	30	14.5	32	3/4″	32	32	TN 92 SV - 18 LR 3/4″	–	–	–	–	17.3
	18		16	32	16.5	32	–	–	–	–	26 × 1.5	31	32	TN 92 SV - 18 LM 26 × 1.5	17.9
	22	PN 160	14	33	16.5	36	1/2″	26	32	TN 92 SV - 22 LR 1/2″	22 × 1.5	27	32	TN 92 SV - 22 LM 22 × 1.5	17.7
	22		18	34	17.5	36	1″	39	41	TN 92 SV - 22 LR 1″	–	–	–	–	27.8
	28		16	34	17.5	41	3/4″	32	41	TN 92 SV - 28 LR 3/4″	–	–	–	–	25.6
	35		18	39	17.5	50	1″	39	46	TN 92 SV - 35 LR 1″	–	–	–	–	37.8
重型 S	6	PE 630	14	33	18	17	1/2″	26	27	TN 92 SV - 6 SR 1/2″	–	–	–	–	10.8
	8		12	30	15.5	19	3/8″	22	22	TN 92 SV - 8 SR 3/8″	–	–	–	–	8.0
	10		12	31	14.5	22	1/4″	18	19	TN 92 SV - 10 SR 1/4″	–	–	–	–	7.5
	10		14	34	17.5	22	1/2″	26	27	TN 92 SV - 10 SR 1/2″	–	–	–	–	12.9
	10		12	31	15.5	22	–	–	–	–	18 × 1.5	23	24	TN 92 SV - 10 SM 18 × 1.5*	8.6
	12		12	33	16.5	24	1/4″	18	22	TN 92 SV - 12 SR 1/4″	–	–	–	–	9.3
	12		14	34	17.5	24	–	–	–	–	22 × 1.5	27	27	TN 92 SV - 12 SM 22 × 1.5*	13.0
	14		12	36	18.5	27	3/8″	22	24	TN 92 SV - 14 SR 3/8″	–	–	–	–	12.8
	16	PE 400	12	36	18	30	3/8″	22	27	TN 92 SV - 16 SR 3/8″	18 × 1.5	23	27	TN 92 SV - 16 SM 18 × 1.5	15.3
	16		16	39	20.5	30	3/4″	32	32	TN 92 SV - 16 SR 3/4″	–	–	–	–	22.6
	20		14	42	20.5	36	1/2″	26	32	TN 92 SV - 20 SR 1/2″	–	–	–	–	24.3
	25		16	47	23	46	3/4″	32	41	TN 92 SV - 25 SR 3/4″	27 × 2	32	41	TN 92 SV - 25 SM 27 × 2	46.5
	30	PE 250	18	50	23.5	50	1″	39	46	TN 92 SV - 30 SR 1″	–	–	–	–	57.8
	38		20	57	26	60	1″ 1/4	49	55	TN 92 SV - 38 SR 1″ 1/4	–	–	–	–	91.9

Overall sizes are with closed fitting.
总长为预安装后的长度。
* Safety factor = 2 安全系数 =2

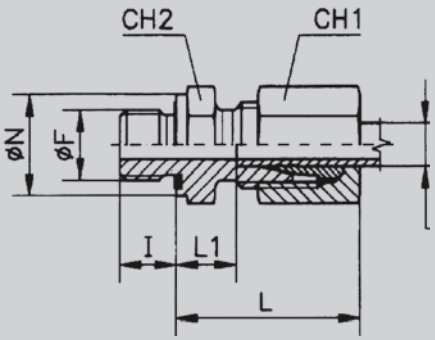

TN 92 GG

Male Stud Couplings rubber seal
外螺纹端面胶垫密封管接头
可连接螺纹形式：英制圆柱螺纹
公制圆柱螺纹
密封形式：DIN 3852第十一部分的带弹性密封体结构

系列	Ø 钢管外径 d_1	公称压力 PN	尺寸				R				M				重量 kg./100 件
			b) I	L	b) L1	CH1	Ø F	Ø N	CH2	订货型号	Ø F	Ø N	CH2	订货型号	
轻型 L	6	315	8	23	8.5	14	1/8"	14	14	TN 92 GG - 6 LR	10 × 1	14	14	TN 92 GG - 6 LM	2.5
	8		12	25	10	17	1/4"	19	19	TN 92 GG - 8 LR	12 × 1.5	17	17	TN 92 GG - 8 LM	4.5
	10		12	26	11	19	1/4"	19	19	TN 92 GG - 10 LR	14 × 1.5	19	19	TN 92 GG - 10 LM	4.7
	12		12	27	12.5	22	3/8"	22	22	TN 92 GG - 12 LR	16 × 1.5	22	22	TN 92 GG - 12 LM	6.5
	15		14	29	14	27	1/2"	27	27	TN 92 GG - 15 LR	18 × 1.5	24	24	TN 92 GG - 15 LM	11.5
	18		14	31	14.5	32	1/2"	27	27	TN 92 GG - 18 LR	22 × 1.5	27	27	TN 92 GG - 18 LM	13.0
	22	160	16	33	16.5	36	3/4"	32	32	TN 92 GG - 22 LR	26 × 1.5	32	32	TN 92 GG - 22 LM	18.0
	28		18	34	17.5	41	1"	40	41	TN 92 GG - 28 LR	33 × 2	40	41	TN 92 GG - 28 LM	25.0
	35		20	39	17.5	50	1" 1/4	50	50	TN 92 GG - 35 LR	42 × 2	50	50	TN 92 GG - 35 LM	41.0
	42		22	42	19	60	1" 1/2	55	55	TN 92 GG - 42 LR	48 × 2	55	55	TN 92 GG - 42 LM	46.0
重型 S	6	630	12	28	13	17	1/4"	19	19	TN 92 GG - 6 SR	12 × 1.5	17	17	TN 92 GG - 6 SM	5.2
	8		12	30	15	19	1/4"	19	19	TN 92 GG - 8 SR	14 × 1.5	19	19	TN 92 GG - 8 SM	6.0
	10		12	31	15	22	3/8"	22	22	TN 92 GG - 10 SR	16 × 1.5	22	22	TN 92 GG - 10 SM	9.0
	12		12	33	17	24	3/8"	22	22	TN 92 GG - 12 SR	18 × 1.5	24	24	TN 92 GG - 12 SM	10.2
	14		14	37	19	27	1/2"	27	27	TN 92 GG - 14 SR	20 × 1.5	26	27	TN 92 GG - 14 SM	15.2
	16	400	14	37	18.5	30	1/2"	27	27	TN 92 GG - 16 SR	22 × 1.5	27	27	TN 92 GG - 16 SM	16.0
	20		16	42	20.5	36	3/4"	32	32	TN 92 GG - 20 SR	27 × 2	32	32	TN 92 GG - 20 SM	27.0
	25		18	47	23	46	1"	40	41	TN 92 GG - 25 SR	33 × 2	40	41	TN 92 GG - 25 SM	49.0
	30		20	50	23.5	50	1" 1/4	50	50	TN 92 GG - 30 SR	42 × 2	50	50	TN 92 GG - 30 SM	66.0
	38	315	22	57	26	60	1" 1/2	55	55	TN 92 GG - 38 SR	48 × 2	55	55	TN 92 GG - 38 SM	92.0

Overall sizes are with closed fitting.
总长为预安装后的长度。
Temperature range without pressure reductions with connections fitted with seals in NBR (standard) and FPM (to order): NBR (Perbunan): from -35 to +100℃ - FPM (Viton): from -25 to +120℃
适合带橡胶垫的零件工作温度范围：NBR 丁晴橡胶 -35° 至 +100℃，PM (Viton): 氟橡胶 -25 t 至 +120℃
b) TN92-15LM - I = 12; L1 = 13.5

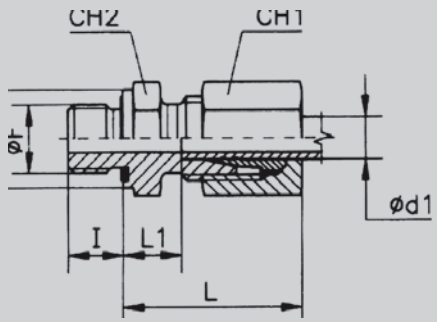

PECIAL FITTINGS
特制接头

TN 92 GG

Male Stud Couplings rubber seal
外螺纹端面胶垫密封管接头
可连接螺纹形式：英制圆柱螺纹
公制圆柱螺纹
密封形式：DIN 3852第十一部分的带弹性密封体结构

系列	Ø 钢管外径 d_1	公称压力 PN	尺寸				R				M				重量 kg./100 件
			I	L	L1	CH1	ØF	ØN	CH2	订货型号	Ø F	ØN	CH2	订货型号	
轻型 L	6	315	12	25	10	14	1/4"	19	19	TN 92 GG - 6 LR 1/4"	–	–	–	–	3.5
	6		12	26	11.5	14	3/8"	22	22	TN 92 GG - 6 LR 3/8"	–	–	–	–	5.6
	8		8	24	8.5	17	1/8"	14	14	TN 92 GG - 8 LR 1/8"	–	–	–	–	3.1
	8		12	26	11.5	17	3/8"	22	22	TN 92 GG - 8 LR 3/8"	–	–	–	–	6.0
	8		14	27	12	17	1/2"	27	27	TN 92 GG - 8 LR 1/2"	–	–	–	–	9.0
	10		8	26	11	19	1/8"	14	17	TN 92 GG - 10 LR 1/8"	–	–	–	–	4.0
	10		12	27	12	19	–	–	–	–	16 × 1.5	22	22	TN 92 GG - 10 LM 16 × 1.5	6.0
	10		12	27	12.5	19	3/8"	22	22	TN 92 GG - 10 LR 3/8"	18 × 1.5	24	24	TN 92 GG - 10 LM 18 × 1.5	7.0
	10		14	28	13	19	1/2"	27	27	TN 92 GG - 10 LR 1/2"	22 × 1.5	27	27	TN 92 GG - 10 LM 22 × 1.5	9.2
	12		12	26	12	22	1/4"	19	19	TN 92 GG - 12 LR 1/4"	14 × 1.5	19	19	TN 92 GG - 12 LM 14 × 1.5	6.1
	12		12	27	12.5	22	–	–	–	–	18 × 1.5	24	24	TN 92 GG - 12 LM 18 × 1.5	7.4
	12		14	28	13	22	1/2"	27	27	TN 92 GG - 12 LR 1/2"	22 × 1.5	27	27	TN 92 GG - 12 LM 22 × 1.5	9.5
	15		12	29	13.5	27	3/8"	22	24	TN 92 GG - 15 LR 3/8"	16 × 1.5	22	24	TN 92 GG - 15 LM 16 × 1.5	9.7
	15		16	30	15	27	3/4"	32	32	TN 92 GG - 15 LR 3/4"	–	–	–	–	16.1
	15		14	30	15	27	–	–	–	–	22 × 1.5	27	27	TN 92 GG - 15 LM 22 × 1.5	12.1
	18		16	30	14.5	32	3/4"	32	32	TN 92 GG - 18 LR 3/4"	–	–	–	–	17.3
	18		12	27	12.5	32	–	–	–	–	18 × 1.5	24	27	TN 92 GG - 18 LM 18 × 1.5	13.2
	22	160	14	33	16.5	36	1/2"	27	32	TN 92 GG - 22 LR 1/2"	22 × 1.5	27	32	TN 92 GG - 22 LM 22 × 1.5	17.7
	22		18	34	17.5	36	1"	40	41	TN 92 GG - 22 LR 1"	–	–	–	–	27.8
	28		16	34	17.5	41	3/4"	32	41	TN 92 GG - 28 LR 3/4"	–	–	–	–	25.6
	35		18	39	17.5	50	1"	40	46	TN 92 GG - 35 LR 1"	–	–	–	–	37.8
重型 S	8	630	12	30	15.5	19	3/8"	22	22	TN 92 GG - 8 SR 3/8"	–	–	–	–	8.0
	10		12	31	14.5	22	1/4"	19	19	TN 92 GG - 10 SR 1/4"	–	–	–	–	7.5
	10		14	34	17.5	22	1/2"	27	27	TN 92 GG - 10 SR 1/2"	–	–	–	–	12.9
	12		12	33	16.5	24	1/4"	19	22	TN 92 GG - 12 SR 1/4"	–	–	–	–	9.3
	12		14	34	17.5	24	1/2"	27	27	TN 92 GG - 12 SR 1/2"	22 × 1.5	27	27	TN 92 GG - 12 SM 22 × 1.5	13.5
	14		12	36	18.5	27	3/8"	22	24	TN 92 GG - 14 SR 3/8"	–	–	–	–	12.8
	16	400	12	36	18	30	3/8"	22	27	TN 92 GG - 16 SR 3/8"	18 × 1.5	24	27	TN 92 GG - 16 SM 18 × 1.5	15.3
	16		16	39	20.5	30	3/4"	32	32	TN 92 GG - 16 SR 3/4"	–	–	–	–	22.6
	20		14	42	20.5	36	1/2"	27	32	TN 92 GG - 20 SR 1/2"	–	–	–	–	24.3
	25		16	47	23	46	3/4"	32	41	TN 92 GG - 25 SR 3/4"	–	–	–	–	46.5
	30		18	50	23.5	50	1"	40	46	TN 92 GG - 30 SR 1"	–	–	–	–	57.8
	38	315	20	57	26	60	1"1/4	50	55	TN 92 GG - 38 SR 1"1/4	–	–	–	–	91.9

Overall sizes are with closed fitting.
总长为预安装后的长度。

Temperature range without pressure reductions with connections fitted with seals in NBR (standard) and FPM (to order): NBR (Perbunan): from -35 to +100℃ - FPM (Viton): from -25 to +120℃
适合带橡胶垫的零件工作温度范围：NBR（丁腈橡胶）- -35 to 至 100℃ FPM（氟橡胶）: -25 至 +120℃

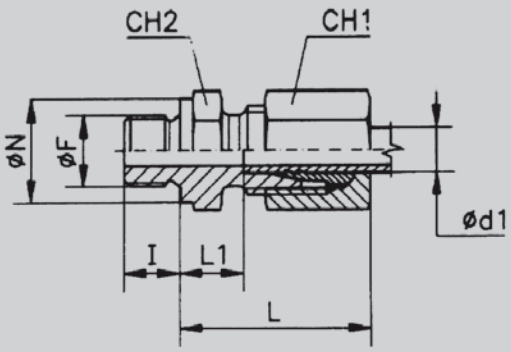

TN 92 A

Male Stud fitting type A
英制管螺纹A型端面管接头
可连接螺纹形式：英制圆柱螺纹
密封形式：DIN 3852第二部分的硬性密封结构

Seal to DIN 7603 Standards 密封件符合DIN7603标准

系列	Ø 钢管外径 d_1	公称压力 PN PE	尺寸 Ø F	Ø N	I	L1	L	CH1	CH2	订货型号	重量 kg./100 件
轻型 L	6	PN 315	1/8"	14	8	8.5	23	14	14	TN 92 - 6 LR - A	2.5
	8		1/4"	18	12	10	25	17	19	TN 92 - 8 LR - A	4.5
	10		1/4"	18	12	11	26	19	19	TN 92 - 10 LR - A	4.7
	12		3/8"	22	12	12.5	27	22	22	TN 92 - 12 LR - A	6.9
	15		1/2"	26	14	14	29	27	27	TN 92 - 15 LR - A	11.5
	18		1/2"	26	14	14.5	31	32	27	TN 92 - 18 LR - A	12.9
	22	PN 160	3/4"	32	16	16.5	33	36	32	TN 92 - 22 LR - A	17.6
	28		1"	39	18	17.5	34	41	41	TN 92 - 28 LR - A	24.7
	35		1"1/4	49	20	17.5	39	50	50	TN 92 - 35 LR - A	40.7
	42		1"1/2	55	22	19	42	60	55	TN 92 - 42 LR - A	45.6
重型 S	6	PE 630	1/4"	18	12	13	28	17	19	TN 92 - 6 SR - A	5.0
	8		1/4"	18	12	15	30	19	19	TN 92 - 8 SR - A	5.5
	10		3/8"	22	12	15	31	22	22	TN 92 - 10 SR - A	8.2
	12		3/8"	22	12	17	33	24	22	TN 92 - 12 SR - A	9.5
	14		1/2"	26	14	19	37	27	27	TN 92 - 14 SR - A	14.8
	16	PE 400	1/2"	26	14	18.5	37	30	27	TN 92 - 16 SR - A	15.4
	20		3/4"	32	16	20.5	42	36	32	TN 92 - 20 SR - A	25.3
	25		1"	39	18	23	47	46	41	TN 92 - 25 SR - A	48.5
	30	PE 250	1"1/4	49	20	23.5	50	50	50	TN 92 - 30 SR - A	64.4
	38		1"1/2	55	22	26	57	60	55	TN 92 - 38 SR - A	88.9

SPECIAL FITTINGS 特制接头

轻型 L	6	PN 315	1/4"	18	12	10	25	14	19	TN 92 - 6 LR - 1/4" - A	4.0
	8		1/8"	14	8	9.5	24	17	14	TN 92 - 8 LR - 1/8" - A	3.1
	8		3/8"	22	12	11.5	26	17	22	TN 92 - 8 LR - 3/8" - A	6.0
	10		3/8"	22	12	12.5	27	19	22	TN 92 - 10 LR - 3/8" - A	6.2
	10		1/2"	26	14	13	28	19	27	TN 92 - 10 LR - 1/2" - A	9.5
	12		1/4"	18	12	12	27	22	19	TN 92 - 12 LR - 1/4" - A	6.0
	12		1/2"	26	14	13	28	22	27	TN 92 - 12 LR - 1/2" - A	9.5
	15		3/8"	22	12	13.5	29	27	24	TN 92 - 15 LR - 3/8" - A	9.7
重型 S	6	PE 630	1/8"	14	8	13	28	17	14	TN 92 - 6 SR - 1/8" - A	3.1
	10		1/4"	18	12	14.5	31	22	19	TN 92 - 10 SR - 1/4" - A	7.3
	12		1/4"	18	12	16.5	33	24	22	TN 92 - 12 SR - 1/4" - A	9.3
	12		1/2"	26	14	17.5	34	24	27	TN 92 - 12 SR - 1/2" - A	13.5
	16	PE 400	3/8"	22	12	18	36	30	27	TN 92 - 16 SR - 3/8" - A	15.2
	20		1/2"	26	14	20.5	42	36	32	TN 92 - 20 SR - 1/2" - A	25.3
	25		3/4"	32	16	23	47	46	41	TN 92 - 25 SR - 3/4" - A	46.5
	30	PE 250	3/4"	32	16	23.5	50	50	46	TN 92 - 30 SR - 3/4" - A	54.0
	30		1"	39	18	23.5	50	50	46	TN 92 - 30 SR - 1" - A	58.0
	38		1"	39	18	26	57	60	55	TN 92 - 38 SR - 1" - A	90.5
	38		1" 1/4	49	20	26	57	60	55	TN 92 - 38 SR - 1"1/4 - A	92.0

Overall sizes are with closed fitting. 总长为预安装后的长度。
AVAILABLE WHILE - STOCKS LAST 特制接头库存量随订单而变化，交期另行通知

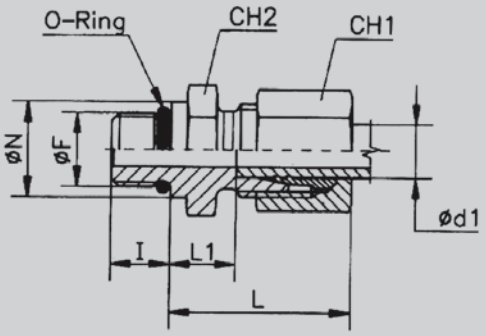

TN 92 UNF/UN

Male Stud couplings UNF/UN UNF/UN
UNF/UN端面直通接头
可连接螺纹形式：UNF/UN

系列	Ø 钢管外径 d_1	公称压力 PN	尺寸 Ø F	Ø N	I	L1	L	CH2	CH1	O 型圈尺寸	MT Nm	订货型号	重量 kg./100 件
轻型 L	8	315	7/16 - 20 UNF	14.4	9	10	25	17	17	8.92 × 1.83	15	TN 92 - 8 L - 7/16 - 20 UNF	3.2
	10		7/16 - 20 UNF	14.4	9	11	26	17	19	8.92 × 1.83	15	TN 92 - 10 L - 7/16 - 20 UNF	4.0
	12		9/16 - 18 UNF	17.6	10	11	26	19	22	11.9 × 1.98	25	TN 92 - 12 L - 9/16 - 18 UNF	5.0
	12		3/4 - 16 UNF	22.3	11	13	28	24	22	16.36 × 2.20	30	TN 92 - 12 L - 3/4 - 16 UNF	7.0
	12		7/8 - 14 UNF	25.5	12.7	14.3	29	27	22	19.18 × 2.46	50	TN 92 - 12 L - 7/8 - 14 UNF	7.5
	15		3/4 - 16 UNF	22.3	11	14	29	24	27	16.36 × 2.20	30	TN 92 - 15 L - 3/4 - 16 UNF	9.5
	18		3/4 - 16 UNF	22.3	11	14.5	31	27	32	16.36 × 2.20	30	TN 92 - 18 L - 3/4 - 16 UNF	12.5
	18		7/8 - 14 UNF	25.5	12.7	14.8	31	27	32	19.18 × 2.46	50	TN 92 - 18 L - 7/8 - 14 UNF	13.2
	22	160	7/8 - 14 UNF	25.5	12.7	16.8	33	32	36	19.18 × 2.46	50	TN 92 - 22 L - 7/8 - 14 UNF	17.2
	22		1"1/16 - 12 UN	31.9	15	16.5	33	32	36	23.47 × 2.95	60	TN 92 - 22 L - 1"1/16 - 12 UN	18.5
	22		1"5/16 - 12 UN	38.2	15	17.5	34	41	36	29.74 × 2.95	130	TN 92 - 22 L - 1"5/16 - 12 UN	23.5
	28		1"1/16 - 12 UN	31.9	15	17.5	34	41	41	23.47 × 2.95	60	TN 92 - 28 L - 1"1/16 - 12 UN	24.2
	28		1"5/16 - 12 UN	38.2	15	17.5	34	41	41	29.74 × 2.95	130	TN 92 - 28 L - 1"5/16 - 12 UN	25.0
	35		1"5/16 - 12 UN	38.2	15	17.5	39	46	50	29.74 × 2.95	130	TN 92 - 35 L - 1"5/16 - 12 UN	36.2
	35		1"5/8 - 12 UN	47.7	15	17.5	39	50	50	37.46 × 3	150	TN 92 - 35 L - 1"5/8 - 12 UN	40.0
	42		1"5/8 - 12 UN	47.7	15	19	42	55	60	37.46 × 3	150	TN 92 - 42 L - 1"5/8 - 12 UN	56.0
重型 S	8	630	7/16 - 20 UNF	16	9	15	30	17	19	8.92 × 1.83	20	TN 92 - 8 S - 7/16 - 20 UNF	5.0
	10		9/16 - 18 UNF	17.6	10	14.5	31	19	22	11.9 × 1.98	35	TN 92 - 10 S - 9/16 - 18 UNF	6.5
	12		9/16 - 18 UNF	17.6	10	14.5	31	22	24	11.9 × 1.98	35	TN 92 - 12 S - 9/16 - 18 UNF	8.0
	12		3/4 - 16 UNF	22.3	11	17.5	34	24	24	16.36 × 2.20	70	TN 92 - 12 S - 3/4 - 16 UNF	10.0
	16	400	3/4 - 16 UNF	22.3	11	15.5	34	24	30	16.36 × 2.20	70	TN 92 - 16 S - 3/4 - 16 UNF	13.0
	16		7/8 - 14 UNF	25.5	12.7	18.8	37	27	30	19.18 × 2.46	100	TN 92 - 16 S - 7/8 - 14 UNF	15.0
	20		3/4 - 16 UNF	22.3	11	20.5	42	32	36	16.36 × 2.20	70	TN 92 - 20 S - 3/4 - 16 UNF	22.0
	20		7/8 - 14 UNF	25.5	12.7	20.8	42	32	36	19.18 × 2.46	100	TN 92 - 20 S - 7/8 - 14 UNF	23.0
	20		1"1/16 - 12 UN	31.9	15	20.5	42	32	36	23.47 × 2.95	170	TN 92 - 20 S - 1"1/16 - 12 UN	25.0
	25		1"1/16 - 12 UN	31.9	15	23	47	36	46	23.47 × 2.95	170	TN 92 - 25 S - 1"1/16 - 12 UN	40.0
	25		1"5/16 - 12 UN	38.2	15	23	47	41	46	29.74 × 2.95	270	TN 92 - 25 S - 1"5/16 - 12 UN	46.0
	30		1"5/16 - 12 UN	38.2	15	23.5	50	46	50	29.74 × 2.95	270	TN 92 - 30 S - 1"5/16 - 12 UN	53.0
	30		1"5/8 - 12 UN	47.7	15	23.5	50	50	50	37.46 × 3	280	TN 92 - 30 S - 1"5/8 - 12 UN	62.0
	38	315	1"5/8 - 12 UN	47.7	15	26	57	55	60	37.46 × 3	280	TN 92 - 38 S - 1"5/8 - 12 UN	85.2

Overall sizes are with closed fitting.
总长为预安装后的长度。

Temperature range without pressure reductions with connections fitted with O-Ring in NBR (standard) and FPM (to order):

NBR (Perbunan): from -35 to +100℃ - FPM (Viton): from -25 to +120℃

适合带橡胶垫的零件的工作温度范围值：NBR(丁晴橡胶)-35° 至 +100°，FPM（氟橡胶） -25 至 +120℃

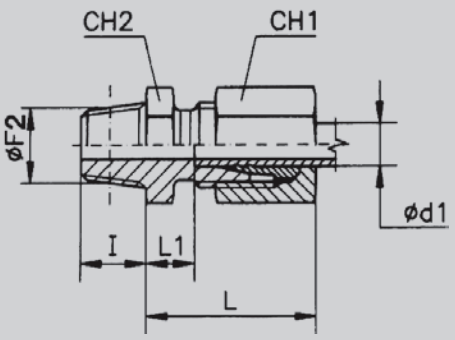

TN 93

Male Stud Couplings
终端直通接头/锥螺纹系列
可连接螺纹形式：B.S.P.锥螺纹
公制锥螺纹
美制锥螺纹

系列	Ø 钢管外径 d_1	公称压力 PN	Ø F2 螺纹尺寸			尺寸							订货型号			重量 kg./100 件
						I			L	L1	CH1	CH2				
			R	M	NPT	R	M	NPT					R	M	NPT	
超轻型 LL	4	100	1/8"	8×1	1/8"	8	8	10	18	8	10	11	TN 93 - 4LLR	TN 93 - 4LLM	TN 93 - 4 LLNPT	1.5
	5		1/8"	8×1	1/8"	8	8	10	18	6.5	12	11	TN 93 - 5LLR	TN 93 - 5LLM ●	TN 93 - 5 LLNPT	1.5
	6		1/8"	10×1	1/8"	8	8	10	18	6.5	12	11	TN 93 - 6LLR	TN 93 - 6LLM	TN 93 - 6 LLNPT	1.7
	8		1/8"	10×1	1/8"	8	8	10	20	8.5	14	12	TN 93 - 8LLR	TN 93 - 8LLM	TN 93 - 8 LLNPT	1.9
	8		1/4"	–	–	12	–	–	20	8.5	14	14	TN 93 - 8LLR 1/4"	–	–	2.0
	10		1/4"	–	–	12	–	–	20	8.5	17	14	TN 93 - 10LLR	–	–	3.0
	12		1/4"	–	–	12	–	–	20	8	19	17	TN 93 - 12LLR	–	–	4.2
	12		3/8"	–	–	12	–	–	20	8	19	17	TN 93 - 12LLR 3/8"	–	–	4.5
轻型 L	6	315	1/8"	10×1	1/8"	10	10	10	23	7	14	12	TN 93 - 6LR	TN 93 - 6LM	TN 93 - 6 LNPT	2.4
	6		1/4"	–	1/4"	13	–	15	24	8	14	17	TN 93 - 6LR 1/4"	–	TN 93 - 6 LNPT 1/4"	3.9
	8		1/4"	12×1.5	1/4"	13	12	15	25	8	17	17	TN 93 - 8LR	TN 93 - 8LM	TN 93 - 8 LNPT	4.2
	8		3/8"	–	3/8"	13	–	15	26	9	17	19	TN 93 - 8LR 3/8"	–	TN 93 - 8 LNPT 3/8"	6.0
	10		1/4"	14×1.5	1/4"	13	12	15	26	9	19	17	TN 93 - 10LR	TN 93 - 10LM ●	TN 93 - 10 LNPT	4.7
	10		3/8"	–	3/8"	13	–	15	27	10	19	19	TN 93 - 10LR 3/8"	–	TN 93 - 10 LNPT 3/8"	6.0
	12		1/4"	–	1/4"	13	–	15	27	10	22	19	TN 93 - 12LR 1/4"	–	TN 93 - 12 LNPT 1/4"	5.9
	12		3/8"	16×1.5	3/8"	13	12	15	27	10	22	19	TN 93 - 12LR	TN 93 - 12LM ●	TN 93 - 12 LNPT	6.5
	12		1/2"	–	1/2"	16	–	20	27	10	22	22	TN 93 - 12LR 1/2"	–	TN 93 - 12 LNPT 1/2"	9.0
	15		1/2"	18×1.5	1/2"	16	12	20	29	11	27	24	TN 93 - 15LR	TN 93 - 15LM ●	TN 93 - 15 LNPT	10.8
	18		1/2"	22×1.5	1/2"	16	14	20	31	11.5	32	27	TN 93 - 18LR	TN 93 - 18LM ●	TN 93 - 18 LNPT	14.3
	22	160	3/4"	26×1.5	3/4"	18	18	20	33	13.5	36	32	TN 93 - 22LR	TN 93 - 22LM ●	TN 93 - 22 LNPT	19.5
	28		1"	33×2	1"	20	20	25	34	14.5	41	41	TN 93 - 28LR	TN 93 - 28LM ●	TN 93 - 28 LNPT	30.0
	35		1"1/4	42×2	1"1/4	21	21	26	39	14.5	50	46	TN 93 - 35LR	TN 93 - 35LM ●	TN 93 - 35 LNPT	44.0
	42		1"1/2	48×2	1"1/2	22	22	26	42	16	60	55	TN 93 - 42LR	TN 93 - 42LM ●	TN 93 - 42 LNPT	58.3
重型 S	6	630	1/4"	12×1.5	1/4"	13	12	15	28	12	17	17	TN 93 - 6SR	TN 93 - 6SM	TN 93 - 6 SNPT	5.4
	8		1/4"	14×1.5	1/4"	13	12	15	30	13	19	17	TN 93 - 8SR	TN 93 - 8SM	TN 93 - 8 SNPT	6.0
	10		1/4"	–	1/4"	13	–	15	31	12.5	22	19	TN 93 - 10SR 1/4"	–	TN 93 - 10 SNPT 1/4"	7.5
	10		3/8"	16×1.5	3/8"	13	12	15	31	12.5	22	19	TN 93 - 10SR	TN 93 - 10SM	TN 93 - 10 SNPT	8.0
	12		1/4"	–	1/4"	13	–	15	33	14.5	24	22	TN 93 - 12SR 1/4"	–	TN 93 - 12 SNPT 1/4"	9.0
	12		3/8"	18×1.5	3/8"	13	12	15	33	14.5	24	22	TN 93 - 12SR	TN 93 - 12SM	TN 93 - 12 SNPT	9.9
	12		1/2"	–	1/2"	16	–	20	33	14.5	24	22	TN 93 - 12SR 1/2"	–	TN 93 - 12 SNPT 1/2"	12.0
	14		1/2"	20×1.5	1/2"	16	14	20	37	16	27	24	TN 93 - 14SR	TN 93 - 14SM	TN 93 - 14 SNPT	14.4
	16	400	1/2"	22×1.5	1/2"	16	14	20	37	17.5	30	27	TN 93 - 16SR	TN 93 - 16SM	TN 93 - 16 SNPT	16.5
	20		3/4"	27×2	3/4"	18	18	20	42	17.5	36	32	TN 93 - 20SR	TN 93 - 20SM	TN 93 - 20 SNPT	26.0
	25		1"	33×2	1"	20	20	25	47	18	46	41	TN 93 - 25SR	TN 93 - 25SM	TN 93 - 25 SNPT	49.5
	30		1"1/4	42×2	1"1/4	21	21	26	50	19.5	50	46	TN 93 - 30SR	TN 93 - 30SM	TN 93 - 30 SNPT	63.8
	38	315	1"1/2	48×2	1"1/2	22	22	26	57	22	60	55	TN 93 - 38SR	TN 93 - 38SM	TN 93 - 38 SNPT	91.3

Overall sizes are with closed fitting. 总长为预安装后的长度。
N.B. - Wrench CH 2 of TN 93 - 4 LLM is of 10 mm TN93-4LLM CH2=10
注意：TN93-4LLM CH2=10
TN 93M AVAILABLE WHILE - STOCKS LAST
TN 93M 库存量随订单而变化，交期另行通知

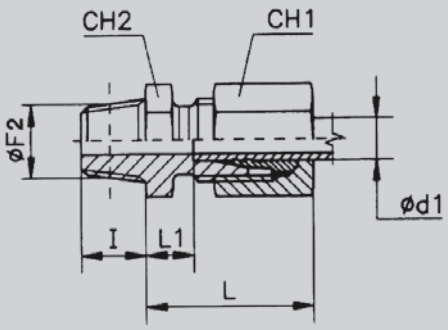

SPECIAL FITTINGS
特制接头

TN 93

Male Stud Couplings
终端直通接头/锥螺纹系列
可连接螺纹形式：B.S.P.锥螺纹
美制锥螺纹

系列	Ø 钢管外径 d_1	公称压力 PN	Ø F2 螺纹尺寸		尺寸							订货型号		重量 kg./100 件
					I		L	L1		CH1	CH2	R	NPT	
			R	NPT	R	NPT								
轻型 L	8	315	1/8”	–	10	–	25	8		17	14	TN 93 - 8 LR 1/8”	–	3.0
	8		1/2”	–	16	–	26	9		17	22	TN 93 - 8 LR 1/2”	–	8.0
	10		1/8”	–	10	–	26	9		19	17	TN 93 - 10 LR 1/8”	–	4.5
	10		1/2”	1/2”	16	20	27	10		19	22	TN 93 - 10 LR 1/2”	TN 93 - 10 LNPT 1/2”	8.3
	15		3/8”	3/8”	13	15	29	11		27	24	TN 93 - 15 LR 3/8”	TN 93 - 15 LNPT 3/8”	9.3
	18		3/8”	–	13	–	31	11.5		32	27	TN 93 - 18 LR 3/8”	–	13.5
	18	160	3/4”	3/4”	18	20	32	11.5		32	32	TN 93 - 18 LR 3/4”	TN 93 - 18 LNPT 3/4”	17.3
	35		1”	–	20	–	39	14.5		50	46	TN 93 - 35 LR 1”	–	42.5
重型 S	14	630	3/8”	–	13	–	37	16		27	24	TN 93 - 14 SR 3/8”	–	13.0
	16	400	3/8”	–	13	–	37	17.5		30	27	TN 93 - 16 SR 3/8”	–	15.7
	30		1”	–	20	–	50	19.5		50	46	TN 93 - 30 SR 1”	–	56.1
	38	315	1” 1/4	–	21	–	57	22		60	55	TN 93 - 38 SR 1” 1/4	–	89.5

Overall sizes are with closed fitting.
总长为预安装后的长度。

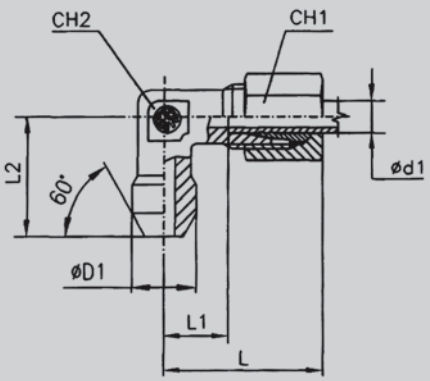

TN 94W

Welding Elbows
焊接式直角接头

系列	Ø 钢管外径 d_1	公称压力 PN	尺寸							订货型号	重量 kg./100 件
			Ø D1	L	L1	L2	CH1	CH 2			
轻型 L	6	315	10	27	12	19	14	12		TN 94 W - 6 L	3.1
	8		12	29	14	23	17	12		TN 94 W - 8 L	4.1
	10		14	30	15	24	19	14		TN 94 W - 10 L	5.4
	12		16	32	17	25	22	17		TN 94 W - 12 L	7.2
	15		19	36	21	30	27	19		TN 94 W - 15 L	12.6
	18		22	40	23.5	33	32	24		TN 94 W - 18 L	18.0
	22	160	27	44	27.5	37	36	27		TN 94 W - 22 L	23.9
	28		32	47	30.5	42	41	36		TN 94 W - 28 L	37.2
	35		40	56	34.5	49	50	41		TN 94 W - 35 L	57.0
	42		46	63	40	57	60	50		TN 94 W - 42 L	65.4
重型 S	6	630	11	31	16	23	17	12		TN 94 W - 6 S	4.9
	8		13	32	17	24	19	14		TN 94 W - 8 S	6.6
	10		15	34	17.5	25	22	17		TN 94 W - 10 S	9.1
	12		17	38	21.5	29	24	17		TN 94 W - 12 S	11.5
	14		19	40	22	30	27	19		TN 94 W - 14 S	15.3
	16	400	21	43	24.5	33	30	24		TN 94 W - 16 S	20.3
	20		26	48	26.5	37	36	27		TN 94 W - 20 S	30.3
	25		31	54	30	42	46	36		TN 94 W - 25 S	56.4
	30		36	62	35.5	49	50	41		TN 94 W - 30 S	76.0
	38	315	44	72	41	57	60	50		TN 94 W - 38 S	112.2

Overall sizes are with closed fitting.
总长为预安装后的长度。
Materials = 9SMn28 DIN 1651 (11SMn30 UNI EN 10277-3).
材料：DIN1651 易切削钢

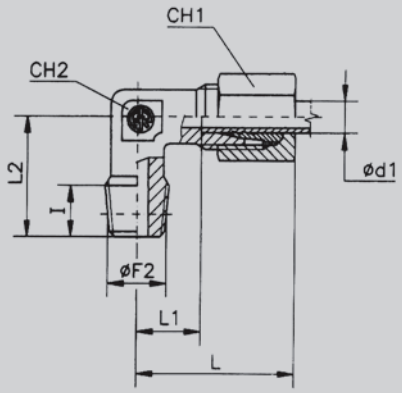

SPECIAL FITTINGS
特制接头

TN 94

Stud Elbows
终端直角接头/锥螺纹系列
可连接螺纹形式：B.S.P.锥螺纹
美制锥螺纹

系列	Ø 钢管外径 d_1	公称压力 PN	Ø F2 螺纹尺寸		尺寸							订货型号		重量 kg./100 件
					I		L	L1	L2	CH1	CH2			
			R	NPT	R	NPT						R	NPT	
轻型 L	6	315	1/4”	1/4”	12	12	29	14	26	14	12	TN 94 - 6 LR 1/4”	TN 94 - 6 LNPT 1/4”	3.6
	8		1/8”	–	8	–	29	14	26	17	12	TN 94 - 8 LR 1/8”	–	3.6
	8		3/8”	3/8”	12	12	32	17	28	17	17	TN 94 - 8 LR 3/8”	TN 94 - 8 LNPT 3/8”	6.2
	10		3/8”	3/8”	12	12	32	17	28	19	17	TN 94 - 10 LR 3/8”	TN 94 - 10 LNPT 3/8”	7.3
	10		1/2”	–	14	–	36	21	34	19	19	TN 94 - 10 LR 1/2”	–	11.3
	12		1/4”	1/4”	12	12	32	17	28	22	17	TN 94 - 12 LR 1/4”	TN 94 - 12 LNPT 1/4”	7.3
	12		1/2”	1/2”	14	14	36	21	34	22	19	TN 94 - 12 LR 1/2”	TN 94 - 12 LNPT 1/2”	11.5
	15		3/8”	–	12	–	36	21	34	27	19	TN 94 - 15 LR 3/8”	–	12.5
重型 S	12	630	1/2”	1/2”	14	14	39	22.5	32	24	19	TN 94 - 12 SR 1/2”	TN 94 - 12 SNPT 1/2”	13.9
	16	400	3/8”	–	12	–	43	24.5	32	30	24	TN 94 - 16 SR 3/8”	–	20.1
	20		1/2”	–	14	–	48	26.5	42	36	27	TN 94 - 20 SR 1/2”	–	30.8

Overall sizes are with closed fitting.
总长为预安装后的长度。

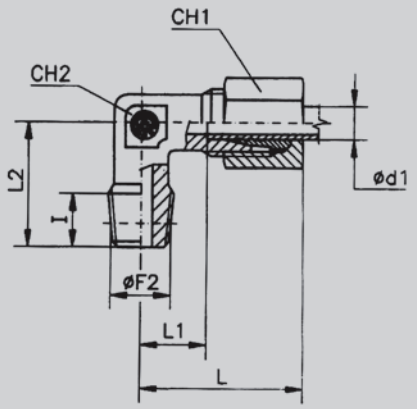

TN 94

Stud Elbows

终端直角接头/锥螺纹系列

可连接螺纹形式：B.S.P.锥螺纹
公制锥螺纹
美制锥螺纹

系列	Ø 钢管外径 d_1	公称压力 PN	Ø F2 螺纹尺寸			尺寸						订货型号			重量 kg./100 件
			R	M	NPT	a) I	L	L1	a) L2	CH1	CH2	R	M	NPT	
超轻型 LL	4	100	1/8”	8 × 1	1/8”	8	21	11	17	10	9	TN 94 - 4 LLR	TN 94 - 4 LLM	TN 94 - 4 LLNPT	2.0
	5		1/8”	8 × 1	1/8”	8	21	9.5	17	12	9	TN 94 - 5 LLR	TN 94 - 5 LLM	TN 94 - 5 LLNPT	2.0
	6		1/8”	10 × 1	1/8”	8	21	9.5	17	12	9	TN 94 - 6 LLR	TN 94 - 6 LLM	TN 94 - 6 LLNPT	2.0
	8		1/8”	10 × 1	1/8”	8	23	11.5	20	14	12	TN 94 - 8 LLR	TN 94 - 8 LLM	TN 94 - 8 LLNPT	2.5
	10		1/4”	–	–	12	27	15	25	17	14	TN 94 - 10 LLR	–	–	3.5
	12		1/4”	–	–	12	25	13	23	19	17	TN 94 - 12 LLR	–	–	5.0
轻型 L	6	315	1/8”	10 × 1	1/8”	8	27	12	20	14	12	TN 94 - 6 LR	TN 94 - 6 LM	TN 94 - 6 LNPT	3.5
	8		1/4”	12 × 1.5	1/4”	12	29	14	26	17	12	TN 94 - 8 LR	TN 94 - 8 LM	TN 94 - 8 LNPT	5.0
	10		1/4”	14 × 1.5	1/4”	12	30	15	27	19	14	TN 94 - 10 LR	TN 94 - 10 LM	TN 94 - 10 LNPT	6.0
	12		3/8”	16 × 1.5	3/8”	12	32	17	28	22	17	TN 94 - 12 LR	TN 94 - 12 LM	TN 94 - 12 LNPT	8.5
	15		1/2”	18 × 1.5	1/2”	14	36	21	34	27	19	TN 94 - 15 LR	TN 94 - 15 LM	TN 94 - 15 LNPT	14.5
	18		1/2”	22 × 1.5	1/2”	14	40	23.5	36	32	24	TN 94 - 18 LR	TN 94 - 18 LM	TN 94 - 18 LNPT	17.0
	22	160	3/4”	–	3/4”	16	44	27.5	42	36	27	TN 94 - 22 LR	–	TN 94 - 22 LNPT	23.5
	28		1”	–	1”	18	47	30.5	48	41	36	TN 94 - 28 LR	–	TN 94 - 28 LNPT	37.5
	35		1”1/4	–	1”1/4	20	56	34.5	54	50	41	TN 94 - 35 LR	–	TN 94 - 35 LNPT	57.0
	42		1”1/2	–	1”1/2	22	63	40	61	60	50	TN 94 - 42 LR	–	TN 94 - 42 LNPT	83.0
重型 S	6	630	1/4”	12 × 1.5	1/4”	12	31	16	26	17	12	TN 94 - 6 SR	TN 94 - 6 SM	TN 94 - 6 SNPT	5.5
	8		1/4”	14 × 1.5	1/4”	12	32	17	27	19	14	TN 94 - 8 SR	TN 94 - 8 SM	TN 94 - 8 SNPT	7.2
	10		3/8”	16 × 1.5	3/8”	12	34	17.5	28	22	17	TN 94 - 10 SR	TN 94 - 10 SM	TN 94 - 10 SNPT	10.3
	12		3/8”	18 × 1.5	3/8”	12	38	21.5	31	24	17	TN 94 - 12 SR	TN 94 - 12 SM	TN 94 - 12 SNPT	11.0
	14		1/2”	20 × 1.5	1/2”	14	40	22	32	27	19	TN 94 - 14 SR	TN 94 - 14 SM	TN 94 - 14 SNPT	16.0
	16	400	1/2”	22 × 1.5	1/2”	14	43	24.5	32	30	24	TN 94 - 16 SR	TN 94 - 16 SM	TN 94 - 16 SNPT	19.5
	20		3/4”	–	3/4”	16	48	26.5	42	36	27	TN 94 - 20 SR	–	TN 94 - 20 SNPT	30.3
	25		1”	–	1”	18	54	30	48	46	36	TN 94 - 25 SR	–	TN 94 - 25 SNPT	57.0
	30		1”1/4	–	1”1/4	20	62	35.5	54	50	41	TN 94 - 30 SR	–	TN 94 - 30 SNPT	83.0
	38	315	1”1/2	–	1”1/2	22	72	41	61	60	50	TN 94 - 38 SR	–	TN 94 - 38 SNPT	117.0

Overall sizes are with closed fitting.
总长为预安装后的长度。
a) TN 94 – 15 LM L2 = 32
TN 94 – 14 SNPT L2 = 34; I = 16
TN 94 – 16 SNPT L2 = 36; I = 16

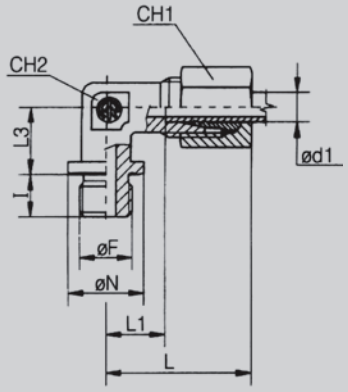

TN 95

Stud Elbows
终端直角接头/直螺纹系列
可连接螺纹形式：英制圆柱螺纹
公制圆柱螺纹
密封形式：DIN 3852第二部分的硬性密封结构

系列	Ø 钢管外径 d_1	公称压力 PN PE	尺寸						R			M			重量 kg./100 件
			I	L	L1	L3	CH1	CH2	Ø F	Ø N	订货型号	Ø F	Ø N	订货型号	
轻型 L	22	PN 160	16	44	27.5	26	36	27	3/4"	32	TN 95 - 22 LR	26 × 1.5	31	TN 95 - 22 LM	24.6
	28		18	47	30.5	30	41	36	1"	39	TN 95 - 28 LR	33 × 2	39	TN 95 - 28 LM	34.7
	35		20	56	34.5	34	50	41	1"1/4	49	TN 95 - 35 LR	42 × 2	49	TN 95 - 35 LM	61.2
	42		22	63	40	39	60	50	1"1/2	55	TN 95 - 42 LR	48 × 2	55	TN 95 - 42 LM	84.6
重型 S	20	PE 400	16	48	26.5	26	36	27	3/4"	32	TN 95 - 20 SR	27 × 2	32	TN 95 - 20 SM	30.3
	25		18	54	31	30	46	36	1"	39	TN 95 - 25 SR	33 × 2	39	TN 95 - 25 SM	58.0
	30	PE 250	20	62	35.5	34	50	41	1"1/4	49	TN 95 - 30 SR	42 × 2	49	TN 95 - 30 SM	74.4
	38		22	72	41	39	60	50	1"1/2	55	TN 95 - 38 SR	48 × 2	55	TN 95 - 38 SM	98.9

Overall sizes are with closed fitting.
总长为预安装后的长度。

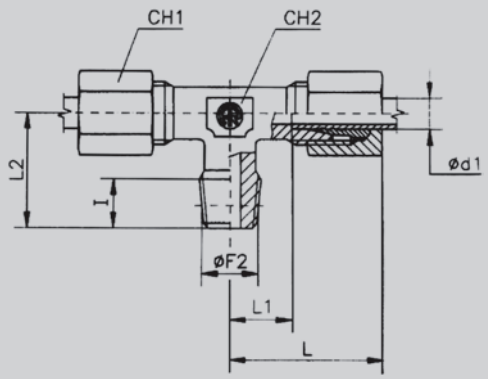

TN 96

Stud Branch Tees
终端三通接头/锥螺纹系列
可连接螺纹形式：B.S.P.锥螺纹
公制锥螺纹

系列	Ø 钢管外径 d_1	公称压力 PN	Ø F2 螺纹尺寸			尺寸						订货型号			重量 kg./100 件
			R	M	NPT	a) I	L	L1	a) L2	CH1	CH2	R	M	NPT	
超轻型 LL	4	100	1/8″	8 × 1	1/8″	8	21	11	17	10	9	TN 96 - 4 LLR	TN 96 - 4 LLM	TN 96 - 4 LLNPT	2.5
	5		1/8″	8 × 1	1/8″	8	21	9.5	17	12	9	TN 96 - 5 LLR	TN 96 - 5 LLM	TN 96 - 5 LLNPT	2.7
	6		1/8″	10 × 1	1/8″	8	21	9.5	17	12	9	TN 96 - 6 LLR	TN 96 - 6 LLM	TN 96 - 6 LLNPT	2.8
	8		1/8″	10 × 1	1/8″	8	23	11.5	20	14	12	TN 96 - 8 LLR	TN 96 - 8 LLM	TN 96 - 8 LLNPT	4.2
	10		1/4″	–	–	12	27	15	25	17	14	TN 96 - 10 LLR	–	–	6.9
	12		1/4″	–	–	12	25	13	23	19	17	TN 96 - 12 LLR	–	–	9.0
轻型 L	6	315	1/8″	10 × 1	1/8″	8	27	12	20	14	12	TN 96 - 6 LR	TN 96 - 6 LM	TN 96 - 6 LNPT	5.5
	8		1/4″	12 × 1.5	1/4″	12	29	14	26	17	12	TN 96 - 8 LR	TN 96 - 8 LM	TN 96 - 8 LNPT	7.5
	10		1/4″	14 × 1.5	1/4″	12	30	15	27	19	14	TN 96 - 10 LR	TN 96 - 10 LM	TN 96 - 10 LNPT	10.6
	12		3/8″	16 × 1.5	3/8″	12	32	17	28	22	17	TN 96 - 12 LR	TN 96 - 12 LM	TN 96 - 12 LNPT	13.0
	15		1/2″	18 × 1.5	1/2″	14	36	21	34	27	19	TN 96 - 15 LR	TN 96 - 15 LM	TN 96 - 15 LNPT	22.0
	18		1/2″	22 × 1.5	1/2″	14	40	23.5	36	32	24	TN 96 - 18 LR	TN 96 - 18 LM	TN 96 - 18 LNPT	32.0
	22	160	3/4″	–	3/4″	16	44	27.5	42	36	27	TN 96 - 22 LR	–	TN 96 - 22 LNPT	40.0
	28		1″	–	1″	18	47	30.5	48	41	36	TN 96 - 28 LR	–	TN 96 - 28 LNPT	56.0
	35		1″ 1/4	–	1″ 1/4	20	56	34.5	54	50	41	TN 96 - 35 LR	–	TN 96 - 35 LNPT	90.0
	42		1″ 1/2	–	1″ 1/2	22	63	40	61	60	50	TN 96 - 42 LR	–	TN 96 - 42 LNPT	135.0
重型 S	6	630	1/4″	12 × 1.5	1/4″	12	31	16	26	17	12	TN 96 - 6 SR	TN 96 - 6 SM	TN 96 - 6 SNPT	9.5
	8		1/4″	14 × 1.5	1/4″	12	32	17	27	19	14	TN 96 - 8 SR	TN 96 - 8 SM	TN 96 - 8 SNPT	12.1
	10		3/8″	16 × 1.5	3/8″	12	34	17.5	28	22	17	TN 96 - 10 SR	TN 96 - 10 SM	TN 96 - 10 SNPT	16.0
	12		3/8″	18 × 1.5	3/8″	12	38	21.5	31	24	17	TN 96 - 12 SR	TN 96 - 12 SM	TN 96 - 12 SNPT	20.3
	14		1/2″	20 × 1.5	1/2″	14	40	22	32	27	19	TN 96 - 14 SR	TN 96 - 14 SM	TN 96 - 14 SNPT	25.1
	16	400	1/2″	22 × 1.5	1/2″	14	43	24.5	32	30	24	TN 96 - 16 SR	TN 96 - 16 SM	TN 96 - 16 SNPT	32.4
	20		3/4″	–	3/4″	16	48	26.5	42	36	27	TN 96 - 20 SR	–	TN 96 - 20 SNPT	48.0
	25		1″	–	1″	18	54	30	48	46	36	TN 96 - 25 SR	–	TN 96 - 25 SNPT	92.0
	30		1″ 1/4	–	1″ 1/4	20	62	35.5	54	50	41	TN 96 - 30 SR	–	TN 96 - 30 SNPT	127.0
	38	315	1″ 1/2	–	1″ 1/2	22	72	41	61	60	50	TN 96 - 38 SR	–	TN 96 - 38 SNPT	189.0

Overall sizes are with closed fitting.
总长为预安装后的长度

a) TN 96 – 15 LM L2 = 32
TN 96 – 14 SNPT L2 = 34; I = 16
TN 96 – 16 SNPT L2 = 36; I = 16

AVAILABLE WHILE STOCKS LAST
库存量随订单而变化，交期另行通知

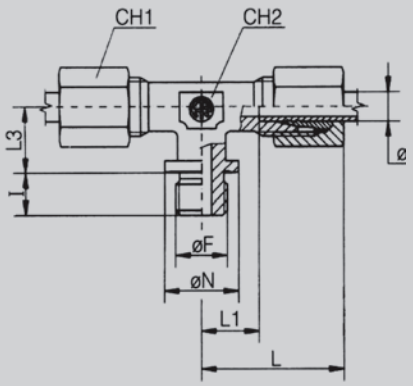

TN 97

Stud Branch Tees
终端三通接头/直螺纹系列
可连接螺纹形式：英制圆柱螺纹
公制圆柱螺纹
密封形式：DIN 3852第二部分的硬性密封结构

系列	Ø 钢管外径 d_1	公称压力 PN PE	尺寸						R			M			重量 kg./100 件
			l	L	L1	L3	CH1	CH2	Ø F	Ø N	订货型号	Ø F	Ø N	订货型号	
轻型 L	22	PN 160	16	44	27.5	26	36	27	3/4″	32	TN 97 - 22 LR	26 × 1.5	31	TN 97 - 22 LM	38.5
	28		18	47	30.5	30	41	36	1″	39	TN 97 - 28 LR	33 × 2	39	TN 97 - 28 LM	64.5
	35		20	56	34.5	34	50	41	1″ 1/4	49	TN 97 - 35 LR	42 × 2	49	TN 97 - 35 LM	109.0
	42		22	63	40	39	60	50	1″ 1/2	55	TN 97 - 42 LR	48 × 2	55	TN 97 - 42 LM	153.3
重型 S	20	PE 400	16	48	26.5	26	36	27	3/4″	32	TN 97 - 20 SR	27 × 2	32	TN 97 - 20 SM	48.8
	25		18	54	31	30	46	36	1″	39	TN 97 - 25 SR	33 × 2	39	TN 97 - 25 SM	83.0
	30	PE 250	20	62	35.5	34	50	41	1″ 1/4	49	TN 97 - 30 SR	42 × 2	49	TN 97 - 30 SM	116.9
	38		22	72	41	39	60	50	1″ 1/2	55	TN 97 - 38 SR	48 × 2	55	TN 97 - 38 SM	166.9

Overall sizes are with closed fitting.
总长为预安装后的长度。

AVAILABLE WHILE STOCKS LAST
库存量随订单而变化，交期另行通知

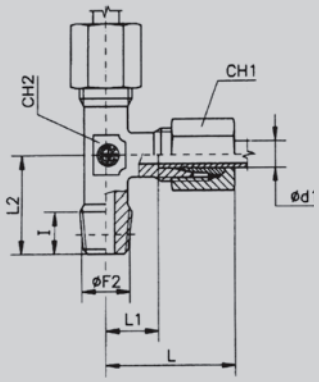

TN 127

Stud Barrel Tees

终端三通接头/锥螺纹系列

可连接螺纹形式：B.S.P.锥螺纹
公制锥螺纹
美制锥螺纹

系列	Ø 钢管外径 d_1	公称压力 PN	Ø F2 螺纹尺寸 R	M	NPT	尺寸 a) I	L	L1	a) L2	CH1	CH2	订货型号 R	M	NPT	重量 kg./100 件
超轻型 LL	4	100	1/8″	8 × 1	1/8″	8	21	11	17	10	9	TN 127 - 4 LLR	TN 127 - 4 LLM	TN 127 - 4 LLNPT	3.0
	5		1/8″	8 × 1	1/8″	8	21	9.5	17	12	9	TN 127 - 5 LLR	TN 127 - 5 LLM	TN 127 - 5 LLNPT	3.0
	6		1/8″	10 × 1	1/8″	8	21	9.5	17	12	9	TN 127 - 6 LLR	TN 127 - 6 LLM	TN 127 - 6 LLNPT	3.0
	8		1/8″	10 × 1	1/8″	8	23	11.5	20	14	12	TN 127 - 8 LLR	TN 127 - 8 LLM	TN 127 - 8 LLNPT	4.0
	10		1/4″	–	–	12	27	15	25	17	14	TN 127 - 10 LLR	–	–	6.6
	12		1/4″	–	–	12	25	13	23	19	17	TN 127 - 12 LLR	–	–	8.7
轻型 L	6	315	1/8″	10 × 1	1/8″	8	27	12	20	14	12	TN 127 - 6 LR	TN 127 - 6 LM	TN 127 - 6 LNPT	5.5
	8		1/4″	12 × 1.5	1/4″	12	29	14	26	17	12	TN 127 - 8 LR	TN 127 - 8 LM	TN 127 - 8 LNPT	7.5
	10		1/4″	14 × 1.5	1/4″	12	30	15	27	19	14	TN 127 - 10 LR	TN 127 - 10 LM	TN 127 - 10 LNPT	11.0
	12		3/8″	16 × 1.5	3/8″	12	32	17	28	22	17	TN 127 - 12 LR	TN 127 - 12 LM	TN 127 - 12 LNPT	13.0
	15		1/2″	18 × 1.5	1/2″	14	36	21	34	27	19	TN 127 - 15 LR	TN 127 - 15 LM	TN 127 - 15 LNPT	22.0
	18		1/2″	22 × 1.5	1/2″	14	40	23.5	36	32	24	TN 127 - 18 LR	TN 127 - 18 LM	TN 127 - 18 LNPT	32.0
	22	160	3/4″	–	3/4″	16	44	27.5	42	36	27	TN 127 - 22 LR	–	TN 127 - 22 LNPT	40.0
	28		1″	–	1″	18	47	30.5	48	41	36	TN 127 - 28 LR	–	TN 127 - 28 LNPT	56.0
	35		1″ 1/4	–	1″ 1/4	20	56	34.5	54	50	41	TN 127 - 35 LR	–	TN 127 - 35 LNPT	90.0
	42		1″ 1/2	–	1″ 1/2	22	63	40	61	60	50	TN 127 - 42 LR	–	TN 127 - 42 LNPT	135.0
重型 S	6	630	1/4″	12 × 1.5	1/4″	12	31	16	26	17	12	TN 127 - 6 SR	TN 127 - 6 SM	TN 127 - 6 SNPT	10.0
	8		1/4″	14 × 1.5	1/4″	12	32	17	27	19	14	TN 127 - 8 SR	TN 127 - 8 SM	TN 127 - 8 SNPT	12.0
	10		3/8″	16 × 1.5	3/8″	12	34	17.5	28	22	17	TN 127 - 10 SR	TN 127 - 10 SM	TN 127 - 10 SNPT	16.0
	12		3/8″	18 × 1.5	3/8″	12	38	21.5	31	24	17	TN 127 - 12 SR	TN 127 - 12 SM	TN 127 - 12 SNPT	20.0
	14		1/2″	20 × 1.5	1/2″	14	40	22	32	27	19	TN 127 - 14 SR	TN 127 - 14 SM	TN 127 - 14 SNPT	25.0
	16	400	1/2″	22 × 1.5	1/2″	14	43	24.5	32	30	24	TN 127 - 16 SR	TN 127 - 16 SM	TN 127 - 16 SNPT	32.0
	20		3/4″	–	3/4″	16	48	26.5	42	36	27	TN 127 - 20 SR	–	TN 127 - 20 SNPT	48.0
	25		1″	–	1″	18	54	30	48	46	36	TN 127 - 25 SR	–	TN 127 - 25 SNPT	92.0
	30		1″ 1/4	–	1″ 1/4	20	62	35.5	54	50	41	TN 127 - 30 SR	–	TN 127 - 30 SNPT	130.0
	38	315	1″ 1/2	–	1″ 1/2	22	72	41	61	60	50	TN 127 - 38 SR	–	TN 127 - 38 SNPT	190.0

Overall sizes are with closed fitting.
总长为预安装后的长度。

a) TN 127 – 15 LM L2 = 32
TN 127 – 14 SNPT L2 = 34; I = 16
TN 127 – 16 SNPT L2 = 36; I = 16

AVAILABLE WHILE STOCKS LAST
库存量随订单而变化，交期另行通知

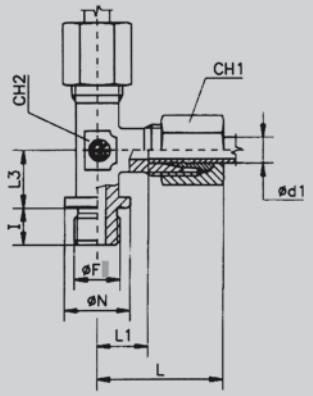

TN 129

Stud Barrel Tees
终端三通接头/直螺纹系列
可连接螺纹形式：英制圆柱螺纹
公制圆柱螺纹
密封形式：DIN 3852第二部分的硬性密封结构

系列	Ø 钢管外径 d_1	公称压力 PN PE	尺寸						R			M			重量 kg./100 件
			I	L	L1	L3	CH1	CH2	Ø F	Ø N	订货型号	Ø F	Ø N	订货型号	
轻型 L	22	PN 160	16	44	27.5	26	36	27	3/4″	32	TN 129 - 22 LR	26 × 1.5	31	TN 129 - 22 LM	42.7
	28		18	47	30.5	30	41	36	1″	39	TN 129 - 28 LR	33 × 2	39	TN 129 - 28 LM	75.0
	35		20	56	34.5	34	50	41	1″ 1/4	49	TN 129 - 35 LR	42 × 2	49	TN 129 - 35 LM	108.9
	42		22	63	40	39	60	50	1″ 1/2	55	TN 129 - 42 LR	48 × 2	55	TN 129 - 42 LM	163.3
重型 S	20	PE 400	16	48	26.5	26	36	27	3/4″	32	TN 129 - 20 SR	27 × 2	32	TN 129 - 20 SM	50.2
	25		18	54	31	30	46	36	1″	39	TN 129 - 25 SR	33 × 2	39	TN 129 - 25 SM	87.1
	30	PE 250	20	62	35.5	34	50	41	1″ 1/4	49	TN 129 - 30 SR	42 × 2	49	TN 129 - 30 SM	118.4
	38		22	72	41	39	60	50	1″ 1/2	55	TN 129 - 38 SR	48 × 2	55	TN 129 - 38 SM	168.8

Overall sizes are with closed fitting.
总长为预安装后的长度。

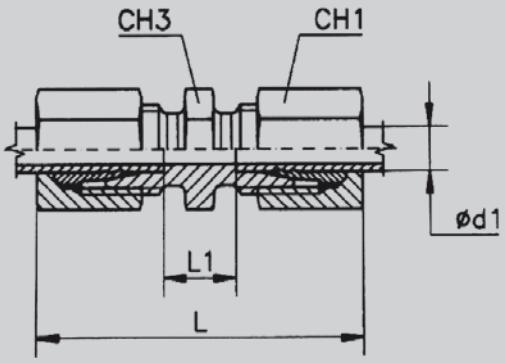

TN 98

Straight couplings
中间连接直接头

系列	Ø 钢管外径 d_1	公称压力 PN	尺寸					订货型号	重量 kg./100 件
			L	L1	CH1	CH3			
超轻型 LL	4	100	31	12	10	9		TN 98 - 4 LL	1.5
	5		32	9	12	11		TN 98 - 5 LL	2.0
	6		32	9	12	11		TN 98 - 6 LL	2.2
	8		35	12	14	12		TN 98 - 8 LL	2.8
	10		35	12	17	14		TN 98 - 10 LL	4.5
	12		35	11	19	17		TN 98 - 12 LL	6.0
轻型 L	6	315	39	10	14	12		TN 98 - 6 L	3.6
	8		40	11	17	14		TN 98 - 8 L	5.0
	10		42	13	19	17		TN 98 - 10 L	7.0
	12		43	14	22	19		TN 98 - 12 L	8.7
	15		46	16	27	24		TN 98 - 15 L	14.0
	18		48	16	32	27		TN 98 - 18 L	20.0
	22	160	52	20	36	32		TN 98 - 22 L	26.5
	28		54	21	41	41		TN 98 - 28 L	32.0
	35		63	20	50	46		TN 98 - 35 L	50.0
	42		66	21	60	55		TN 98 - 42 L	74.1
重型 S	6	630	45	16	17	14		TN 98 - 6 S	4.1
	8		47	18	19	17		TN 98 - 8 S	6.1
	10		49	17	22	19		TN 98 - 10 S	8.0
	12		51	19	24	22		TN 98 - 12 S	11.5
	14		57	22	27	24		TN 98 - 14 S	18.0
	16	400	57	21	30	27		TN 98 - 16 S	23.0
	20		66	23	36	32		TN 98 - 20 S	35.0
	25		74	26	46	41		TN 98 - 25 S	68.0
	30		80	27	50	46		TN 98 - 30 S	83.0
	38	315	90	29	60	55		TN 98 - 38 S	121.0

Overall sizes are with closed fitting.
总长为预安装后的长度。

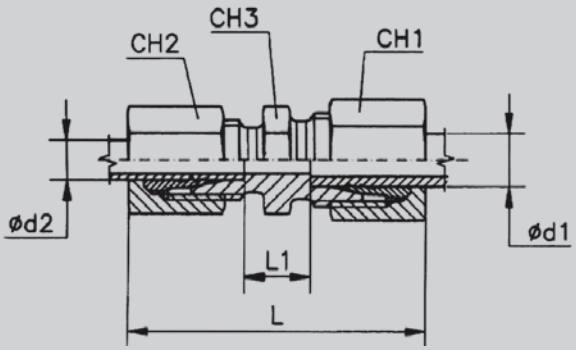

TN 98 R

Reduced straight coupling
变径中间连接直接头

系列	Ø 钢管外径 d_1	Ø T 钢管外径 d_2	公称压力 PN	尺寸 L	L1	CH1	CH2	CH3		订货型号	重量 kg./100 件
轻型 L	8	6	315	39.5	11	17	14	14		TN 98 R - 8/6 L	4.3
	10	6		40.5	11.5	19	14	17		TN 98 R - 10/6 L	5.3
	10	8		41	11.5	19	17	17		TN 98 R - 10/8 L	6.0
	12	6		41	12.5	22	14	19		TN 98 R - 12/6 L	6.2
	12	8		41.5	12.5	22	17	19		TN 98 R - 12/8 L	6.9
	12	10		42.5	13.5	22	19	19		TN 98 R - 12/10 L	7.9
	15	10		44	14.5	27	19	24		TN 98 R - 15/10 L	10.5
	15	12		44.5	14.5	27	22	24		TN 98 R - 15/12 L	11.4
	18	10		45	15	32	19	27		TN 98 R - 18/10 L	13.5
	18	12		45.5	15	32	22	27		TN 98 R - 18/12 L	14.4
	18	15		47	16.5	32	27	27		TN 98 R - 18/15 L	17.0
	22	12	160	47.5	17	36	22	32		TN 98 R - 22/12 L	17.6
	22	15		49	18.5	36	27	32		TN 98 R - 22/15 L	20.3
	22	18		50	18	36	32	32		TN 98 R - 22/18 L	23.3
	28	18		51	19	41	32	41		TN 98 R - 28/18 L	26.0
	28	22		53	21	41	36	41		TN 98 R - 28/22 L	29.3
	35	22		57.5	21	50	36	46		TN 98 R - 35/22 L	38.3
	35	28		58.5	21	50	41	46		TN 98 R - 35/28 L	41.0
重型 S	8	6	630	46	18	19	17	17		TN 98 R - 8/6 S	5.1
	10	6		47	17.5	22	17	19		TN 98 R - 10/6 S	6.0
	10	8		48	17.5	22	19	19		TN 98 R - 10/8 S	7.0
	12	6		48	18.5	24	17	22		TN 98 R - 12/6 S	7.8
	12	8		49	18.5	24	19	22		TN 98 R - 12/8 S	8.8
	12	10		50	18	24	22	22		TN 98 R - 12/10 S	9.8
	14	10		53	20.5	27	22	24		TN 98 R - 14/10 S	13.0
	14	12		54	20.5	27	24	24		TN 98 R - 14/12 S	14.8
	16	12	400	54	21	30	24	27		TN 98 R - 16/12 S	17.3
	16	14		57	22.5	30	27	27		TN 98 R - 16/14 S	20.5
	20	10		57.5	23	36	22	32		TN 98 R - 20/10 S	21.5
	20	12		58.5	23	36	24	32		TN 98 R - 20/12 S	23.3
	20	14		61.5	24	36	27	32		TN 98 R - 20/14 S	26.5
	20	16		61.5	24	36	30	32		TN 98 R - 20/16 S	29.0
	25	16		65.5	27.5	46	30	41		TN 98 R - 25/16 S	45.5
	25	20		70	25.5	46	36	41		TN 98 R - 25/20 S	51.5
	30	20		73	28	50	36	46		TN 98 R - 30/20 S	59.0
	30	25		77	28.5	50	46	46		TN 98 R - 30/25 S	75.5
	38	25	315	82	30	60	46	55		TN 98 R - 38/25 S	94.5
	38	30		85	30.5	60	50	55		TN 98 R - 38/30 S	102.0

Overall sizes are with closed fitting.
总长为预安装后的长度。

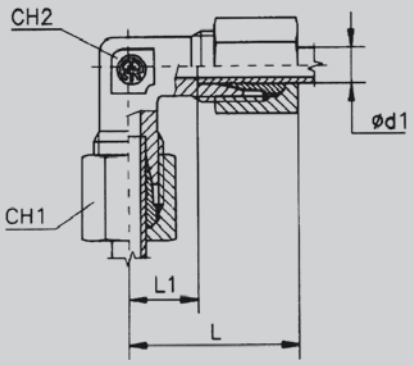

TN 99

Equal Elbows

中间连接直角接头

系列	Ø 钢管外径 d_1	公称压力 PN	尺寸					订货型号	重量 kg./100 件
			L	L1	CH1	CH2			
超轻型 LL	4	100	21	11	10	9		TN 99 - 4 LL	2.0
	5		21	9.5	12	9		TN 99 - 5 LL	2.0
	6		21	9.5	12	9		TN 99 - 6 LL	2.2
	8		23	11.5	14	12		TN 99 - 8 LL	3.9
	10		27	15	17	14		TN 99 - 10 LL	5.2
	12		25	13	19	17		TN 99 - 12 LL	7.0
轻型 L	6	315	27	12	14	12		TN 99 - 6 L	4.2
	8		29	14	17	12		TN 99 - 8 L	5.8
	10		30	15	19	14		TN 99 - 10 L	7.7
	12		32	17	22	17		TN 99 - 12 L	9.8
	15		36	21	27	19		TN 99 - 15 L	16.0
	18		40	23.5	32	24		TN 99 - 18 L	24.0
	22	160	44	27.5	36	27		TN 99 - 22 L	32.0
	28		47	30.5	41	36		TN 99 - 28 L	42.4
	35		56	34.5	50	41		TN 99 - 35 L	76.5
	42		63	40	60	50		TN 99 - 42 L	109.0
重型 S	6	630	31	16	17	12		TN 99 - 6 S	7.1
	8		32	17	19	14		TN 99 - 8 S	8.1
	10		34	17.5	22	17		TN 99 - 10 S	12.9
	12		38	21.5	24	17		TN 99 - 12 S	15.0
	14		40	22	27	19		TN 99 - 14 S	21.0
	16	400	43	24.5	30	24		TN 99 - 16 S	26.0
	20		48	26.5	36	27		TN 99 - 20 S	42.0
	25		54	30	46	36		TN 99 - 25 S	78.0
	30		62	35.5	50	41		TN 99 - 30 S	99.0
	38	315	72	41	60	50		TN 99 - 38 S	133.0

Overall sizes are with closed fitting.

总长为预安装后的长度。

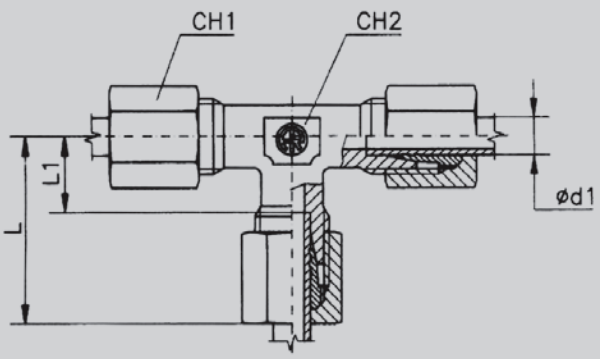

TN 100

Equal Tees

中间连接三通接头

系列	Ø 钢管外径 d_1	公称压力 PN	尺寸					订货型号	重量 kg./100 件
			L	L1	CH1	CH2			
超轻型 LL	4	100	21	11	10	9		TN 100 - 4 LL	2.9
	5		21	9.5	12	9		TN 100 - 5 LL	3.5
	6		21	9.5	12	9		TN 100 - 6 LL	3.5
	8		23	11.5	14	12		TN 100 - 8 LL	4.5
	10		27	15	17	14		TN 100 - 10 LL	7.2
	12		25	13	19	17		TN 100 - 12 LL	9.5
轻型 L	6	315	27	12	14	12		TN 100 - 6 L	6.3
	8		29	14	17	12		TN 100 - 8 L	8.5
	10		30	15	19	14		TN 100 - 10 L	11.5
	12		32	17	22	17		TN 100 - 12 L	15.0
	15		36	21	27	19		TN 100 - 15 L	24.5
	18		40	23.5	32	24		TN 100 - 18 L	35.8
	22	160	44	27.5	36	27		TN 100 - 22 L	47.9
	28		47	30.5	41	36		TN 100 - 28 L	74.5
	35		56	34.5	50	41		TN 100 - 35 L	100.0
	42		63	40	60	50		TN 100 - 42 L	150.0
重型 S	6	630	31	16	17	12		TN 100 - 6 S	11.0
	8		32	17	19	14		TN 100 - 8 S	14.2
	10		34	17.5	22	17		TN 100 - 10 S	19.1
	12		38	21.5	24	17		TN 100 - 12 S	24.3
	14		40	22	27	19		TN 100 - 14 S	30.2
	16	400	43	24.5	30	24		TN 100 - 16 S	39.8
	20		48	26.5	36	27		TN 100 - 20 S	60.0
	25		54	30	46	36		TN 100 - 25 S	112.0
	30		62	35.5	50	41		TN 100 - 30 S	146.0
	38	315	72	41	60	50		TN 100 - 38 S	206.0

Overall sizes are with closed fitting.

总长为预安装后的长度。

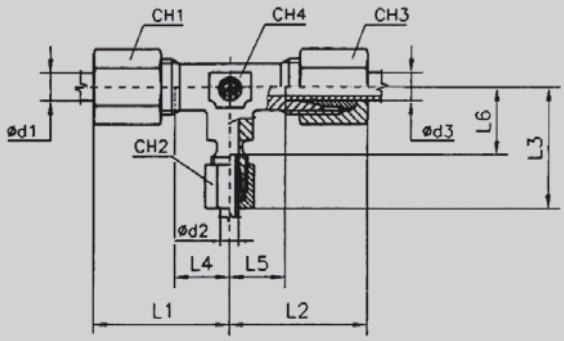

TN 100 R

Reduced-Tee

中间连接三通变径接头

系列	Ø 钢管外径 d_1	Ø 钢管外径 d_2	Ø 钢管外径 d_3	公称压力 PN	尺寸										订货型号
					L1	L2	L3	L4	L5	L6	CH1	CH2	CH3	CH4	
轻型 L	6	8	6	315	29	29	29	12	12	12	14	17	14	12	TN 100 R - 6 - 8 - 6 L
	8	6	8		29	29	29	12	12	12	17	14	17	12	TN 100 R - 8 - 6 - 8 L
	6	10	6		30	30	30	15	15	15	14	19	14	14	TN 100 R - 6 - 10 - 6 L
	8	10	8		30	30	30	15	15	15	17	19	17	14	TN 100 R - 8 - 10 - 8 L
	10	6	10		30	30	30	15	15	15	19	14	19	14	TN 100 R - 10 - 6 - 10 L
	10	8	10		30	30	30	15	15	15	19	17	19	14	TN 100 R - 10 - 8 - 10 L
	10	10	6		30	30	30	15	15	15	19	19	14	14	TN 100 R - 10 - 10 - 6 L
	8	12	8		32	32	32	17	17	17	17	22	17	17	TN 100 R - 8 - 12 - 8 L
	12	6	12		32	32	32	17	17	17	22	14	22	17	TN 100 R - 12 - 6 - 12 L
	12	8	8		32	32	32	17	17	17	22	17	17	17	TN 100 R - 12 - 8 - 8 L
	12	8	12		32	32	32	17	17	17	22	17	22	17	TN 100 R - 12 - 8 - 12 L
	12	10	10		32	32	32	17	17	17	22	19	19	17	TN 100 R - 12 - 10 - 10 L
	12	10	12		32	32	32	17	17	17	22	19	22	17	TN 100 R - 12 - 10 - 12 L
	12	12	10		32	32	32	17	17	17	22	22	19	17	TN 100 R - 12 - 12 - 10 L
	10	15	10		36	36	36	21	21	21	19	27	19	19	TN 100 R - 10 - 15 - 10 L
	12	15	12		36	36	36	21	21	21	22	27	22	19	TN 100 R - 12 - 15 - 12 L
	15	6	15		36	36	36	21	21	21	27	14	27	19	TN 100 R - 15 - 6 - 15 L
	15	10	15		36	36	36	21	21	21	27	19	27	19	TN 100 R - 15 - 10 - 15 L
	15	12	12		36	36	36	21	21	21	27	22	22	19	TN 100 R - 15 - 12 - 12 L
	15	12	15		36	36	36	21	21	21	27	22	27	19	TN 100 R - 15 - 12 - 15 L
	15	15	12		36	36	36	21	21	21	27	27	22	19	TN 100 R - 15 - 15 - 12 L
	12	18	12		38.5	40	38.5	23.5	23.5	23.5	22	32	22	24	TN 100 R - 12 - 18 - 12 L
	18	10	10		40	38.5	38.5	23.5	23.5	23.5	32	19	19	24	TN 100 R - 18 - 10 - 10 L
	18	10	18		40	38.5	40	23.5	23.5	23.5	32	19	32	24	TN 100 R - 18 - 10 - 18 L
	18	12	18		40	38.5	40	23.5	23.5	23.5	32	22	32	24	TN 100 R - 18 - 12 - 18 L
	18	15	18		40	38.5	40	23.5	23.5	23.5	32	27	32	24	TN 100 R - 18 - 15 - 18 L
	18	18	10		40	40	38.5	23.5	23.5	23.5	32	32	19	24	TN 100 R - 18 - 18 - 10 L
	22	10	22	160	44	42.5	44	27.5	27.5	27.5	36	19	36	27	TN 100 R - 22 - 10 - 22 L
	22	12	22		44	42.5	44	27.5	27.5	27.5	36	22	36	27	TN 100 R - 22 - 12 - 22 L
	22	15	15		44	42.5	42.5	27.5	27.5	27.5	36	27	27	27	TN 100 R - 22 - 15 - 15 L
	22	15	22		44	42.5	44	27.5	27.5	27.5	36	27	36	27	TN 100 R - 22 - 15 - 22 L
	22	18	18		44	44	44	27.5	27.5	27.5	36	32	32	27	TN 100 R - 22 - 18 - 18 L
	22	18	22		44	44	44	27.5	27.5	27.5	36	32	36	27	TN 100 R - 22 - 18 - 22 L
	22	22	18		44	44	44	27.5	27.5	27.5	36	36	32	27	TN 100 R - 22 - 22 - 18 L
	28	10	28		47	45.5	47	30.5	30.5	30.5	41	19	41	36	TN 100 R - 28 - 10 - 28 L
	28	12	28		47	45.5	47	30.5	30.5	30.5	41	22	41	36	TN 100 R - 28 - 12 - 28 L
	28	15	28		47	45.5	47	30.5	30.5	30.5	41	27	41	36	TN 100 R - 28 - 15 - 28 L
	28	18	28		47	47	47	30.5	30.5	30.5	41	32	41	36	TN 100 R - 28 - 18 - 28 L
	28	22	22		47	47	47	30.5	30.5	30.5	41	36	36	36	TN 100 R - 28 - 22 - 22 L
	28	22	28		47	47	47	30.5	30.5	30.5	41	36	41	36	TN 100 R - 28 - 22 - 28 L

Overall sizes are with closed fitting.

总长为预安装后的长度。

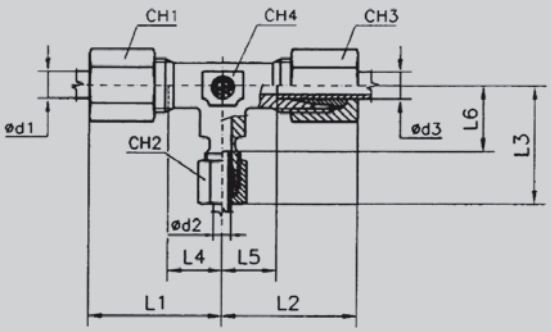

TN 100 R

Reduced-Tee

变径中间连接三通接头

系列	Ø 钢管外径 d_1	Ø 钢管外径 d_2	Ø 钢管外径 d_3	公称压力 PN	尺寸										订货型号
					L1	L2	L3	L4	L5	L6	CH1	CH2	CH3	CH4	
重型 S	10	6	10	630	34	32.5	34	17.5	17.5	17.5	22	17	22	17	TN 100 R - 10 - 6 - 10 S
	12	8	8		38	36.5	36.5	21.5	21.5	21.5	24	19	19	17	TN 100 R - 12 - 8 - 8 S
	12	8	12		38	36.5	38	21.5	21.5	21.5	24	19	24	17	TN 100 R - 12 - 8 - 12 S
	12	10	12		38	38	38	21.5	21.5	21.5	24	22	24	17	TN 100 R - 12 - 10 - 12 S
	12	16	12	400	41	43	41	24.5	24.5	24.5	24	30	24	24	TN 100 R - 12 - 16 - 12 S
	16	6	16		43	40	43	24.5	24.5	24.5	30	17	30	24	TN 100 R - 16 - 6 - 16 S
	16	8	16		43	40	43	24.5	24.5	24.5	30	19	30	24	TN 100 R - 16 - 8 - 16 S
	16	10	16		43	41	43	24.5	24.5	24.5	30	22	30	24	TN 100 R - 16 - 10 - 16 S
	16	12	16		43	41	43	24.5	24.5	24.5	30	24	30	24	TN 100 R - 16 - 12 - 16 S
	16	20	16		45	48	45	26.5	26.5	26.5	30	36	30	27	TN 100 R - 16 - 20 - 16 S
	20	10	20		48	43	48	26.5	26.5	26.5	36	22	36	27	TN 100 R - 20 - 10 - 20 S
	20	12	20		48	43	48	26.5	26.5	26.5	36	24	36	27	TN 100 R - 20 - 12 - 20 S
	20	16	20		48	45	48	26.5	26.5	26.5	36	30	36	27	TN 100 R - 20 - 16 - 20 S
	20	25	20		51.5	54	51.5	30	30	30	36	46	36	36	TN 100 R - 20 - 25 - 20 S
	25	16	25		54	49	54	30	30	30	46	30	46	36	TN 100 R - 25 - 16 - 25 S
	25	20	25		54	52	54	30	30	30	46	36	46	36	TN 100 R - 25 - 20 - 25 S
	25	30	25		60	62	60	35.5	35.5	35.5	46	50	46	41	TN 100 R - 25 - 30 - 25 S

Overall sizes are with closed fitting.

总长为预安装后的长度。

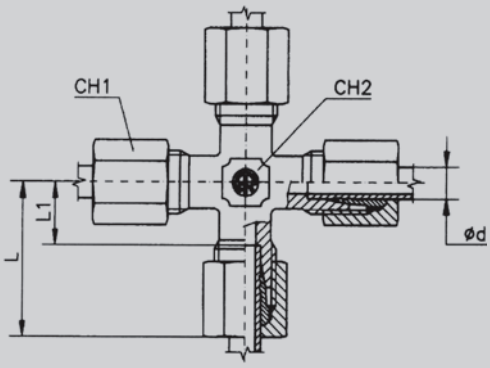

TN 101

Equal Crosses

中间连接四通接头

系列	Ø 钢管外径 d_1	公称压力 PN	尺寸					订货型号	重量 kg./100 件
			L	L1	CH1	CH2			
超轻型 LL	4	100	21	11	10	9		TN 101 - 4 LL	3.0
	5		21	9.5	12	9		TN 101 - 5 LL	4.0
	6		21	9.5	12	9		TN 101 - 6 LL	4.0
	8		23	11.5	14	12		TN 101 - 8 LL	6.0
轻型 L	6	315	27	12	14	12		TN 101 - 6 L	7.8
	8		29	14	17	12		TN 101 - 8 L	11.0
	10		30	15	19	14		TN 101 - 10 L	15.7
	12		32	17	22	17		TN 101 - 12 L	19.5
	15		36	21	27	19		TN 101 - 15 L	31.5
	18		40	23.5	32	24		TN 101 - 18 L	48.7
	22	160	44	27.5	36	27		TN 101 - 22 L	73.0
	28		47	30.5	41	36		TN 101 - 28 L	101.5
	35		56	34.5	50	41		TN 101 - 35 L	123.5
	42		63	40	60	50		TN 101 - 42 L	176.5
重型 S	6	630	31	16	17	12		TN 101 - 6 S	13.0
	8		32	17	19	14		TN 101 - 8 S	17.0
	10		34	17.5	22	17		TN 101 - 10 S	24.2
	12		38	21.5	24	17		TN 101 - 12 S	30.1
	14		40	22	27	19		TN 101 - 14 S	39.0
	16	400	43	24.5	30	24		TN 101 - 16 S	49.0
	20		48	26.5	36	27		TN 101 - 20 S	76.0
	25		54	30	46	36		TN 101 - 25 S	138.0
	30		62	35.5	50	41		TN 101 - 30 S	172.0
	38	315	72	41	60	50		TN 101 - 38 S	269.0

Overall sizes are with closed fitting.
总长为预安装后的长度。

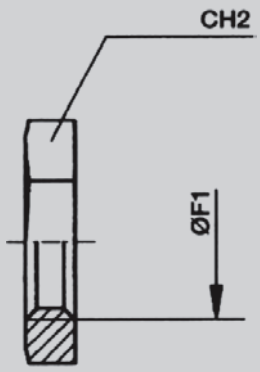

TN 102/118

Bulkhead nut

过壁螺母

可连接螺纹形式：公制螺纹

* Hexagonal wrench to DIN 80705 – UNI EN ISO 8434-1 Standard
六角扳手符合 DIN80705-UNI EN ISO8434-1 标准

系列	Ø 钢管外径 d_1	系列	Ø 钢管外径 d_1	尺寸			订货型号	重量 kg./100 件
				Ø F1	CH2*			
轻型 L	6	重型 S	–	12 × 1.5	17		TN 102/118 - 6 L	0.7
	8		6	14 × 1.5	19		TN 102/118 - 8 L/6 S	0.8
	10		8	16 × 1.5	22		TN 102/118 - 10 L/8 S	1.1
	12		10	18 × 1.5	24		TN 102/118 - 12 L/10 S	1.2
	–		12	20 × 1.5	27		TN 102/118 - 12 S	1.6
	15		14	22 × 1.5	30		TN 102/118 - 15 L/14 S	2.3
	–		16	24 × 1.5	32		TN 102/118 - 16 S	2.5
	18		–	26 × 1.5	36		TN 102/118 - 18 L	4.0
	22		20	30 × 2	41		TN 102/118 - 22 L/20 S	5.0
	28		25	36 × 2	46		TN 102/118 - 28 L/25 S	6.2
	–		30	42 × 2	50		TN 102/118 - 30 S	5.9
	35		–	45 × 2	55		TN 102/118 - 35 L	7.7
	42		38	52 × 2	65		TN 102/118 - 42 L/38 S	11.2

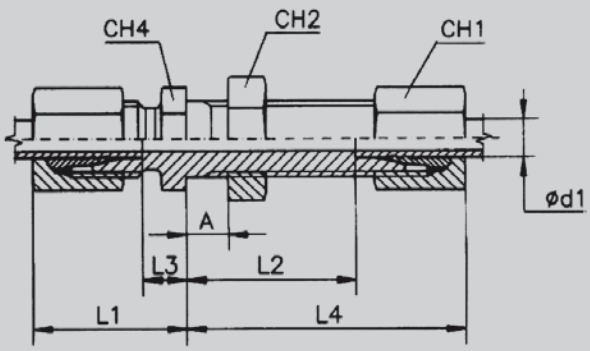

TN 102

Bulkhead Connections
过壁式直通接头

A = 16 mm max.　　A = 最大不能超过 16mm
* Hexagonal wrench to DIN 80705 – UNI EN ISO 8434-1 Standard
六角扳手符合 DIN80705-UNI EN ISO 8434-1 标准

系列	Ø 钢管外径 d_1	公称压力 PN	尺寸								订货型号	重量 kg./100 件
			L1	L2	L3	L4	CH1	CH2*	CH4			
轻型 L	6	315	22	27	7	42	14	17	17		TN 102 - 6 L	7.0
	8		23	27	8	42	17	19	19		TN 102 - 8 L	8.5
	10		25	28	10	43	19	22	22		TN 102 - 10 L	12.7
	12		25	29	10	44	22	24	24		TN 102 - 12 L	15.0
	15		27	31	12	46	27	30	27		TN 102 - 15 L	23.0
	18		30	32.5	13.5	49	32	36	32		TN 102 - 18 L	33.0
	22	160	33	34.5	16.5	51	36	41	36		TN 102 - 22 L	41.0
	28		35	35.5	18.5	52	41	46	41		TN 102 - 28 L	53.0
	35		40	36.5	18.5	58	50	55	50		TN 102 - 35 L	80.0
	42		42	36	19	59	60	65	60		TN 102 - 42 L	120.0
重型 S	6	630	27	29	12	44	17	19	19		TN 102 - 6 S	10.0
	8		28	29	13	44	19	22	22		TN 102 - 8 S	13.0
	10		31	29.5	14.5	46	22	24	24		TN 102 - 10 S	19.0
	12		31	30.5	14.5	47	24	27	27		TN 102 - 12 S	22.0
	14		35	32	17	50	27	30	30		TN 102 - 14 S	27.0
	16	400	35	31.5	16.5	50	30	32	32		TN 102 - 16 S	32.0
	20		39	33.5	17.5	55	36	41	41		TN 102 - 20 S	55.0
	25		44	35	20	59	46	46	46		TN 102 - 25 S	91.0
	30		48	37.5	21.5	64	50	50	50		TN 102 - 30 S	110.0
	38	315	53	37	22	68	60	65	65		TN 102 - 38 S	150.0

Overall sizes are with closed fitting.
总长为预安装后的长度。

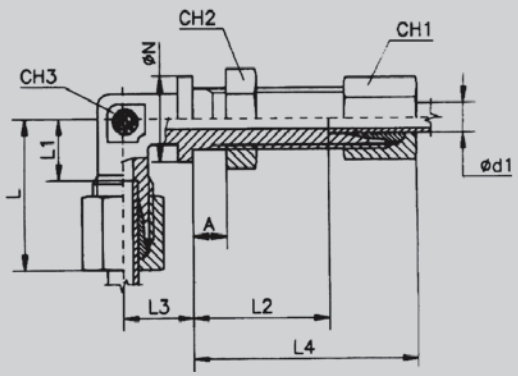

TN 118

Bulkhead Elbows
过壁式角通接头

A = 16 mm max.　　A= 最大不能超过 16mm
* Hexagonal wrench to DIN 80705 – UNI EN ISO 8434-1 Standard
六角扳手符合 DIN80705-UNI EN ISO8434-1 标准

系列	Ø 钢管外径 d_1	公称压力 PN	尺寸										订货型号	重量 kg./100 件
			L	L1	L2	L3	L4	Ø N	CH1	CH2*	CH3			
轻型 L	6	315	27	12	27	14	42	17	14	17	12		TN 118 - 6 L	7
	8		29	14	27	17	42	19	17	19	12		TN 118 - 8 L	10
	10		30	15	28	18	43	22	19	22	14		TN 118 - 10 L	13
	12		32	17	29	20	44	24	22	24	17		TN 118 - 12 L	19
	15		36	21	31	23	46	27	27	30	19		TN 118 - 15 L	28
	18		40	23.5	32.5	24	49	32	32	36	24		TN 118 - 18 L	38
	22	160	44	27.5	34.5	30	51	36	36	41	27		TN 118 - 22 L	49
	28		47	30.5	35.5	34	52	42	41	46	36		TN 118 - 28 L	70
	35		56	34.5	36.5	39	58	50	50	55	41		TN 118 - 35 L	103
	42		63	40	36	43	59	60	60	65	50		TN 118 - 42 L	160
重型 S	6	630	31	16	29	17	44	19	17	19	12		TN 118 - 6 S	10
	8		32	17	29	18	44	22	19	22	14		TN 118 - 8 S	13
	10		34	17.5	29.5	20	46	24	22	24	17		TN 118 - 10 S	20
	12		38	21.5	30.5	21	47	27	24	27	17		TN 118 - 12 S	24
	14		40	22	32	23	50	27	27	30	19		TN 118 - 14 S	30
	16	400	43	24.5	31.5	24	50	30	30	32	24		TN 118 - 16 S	37
	20		48	26.5	33.5	30	55	36	36	41	27		TN 118 - 20 S	60
	25		54	30	35	34	59	42	46	46	36		TN 118 - 25 S	108
	30		62	35.5	37.5	39	64	50	50	50	41		TN 118 - 30 S	120
	38	315	72	41	37	43	68	60	60	65	50		TN 118 - 38 S	180

Overall sizes are with closed fitting.
总长为预安装后的长度。

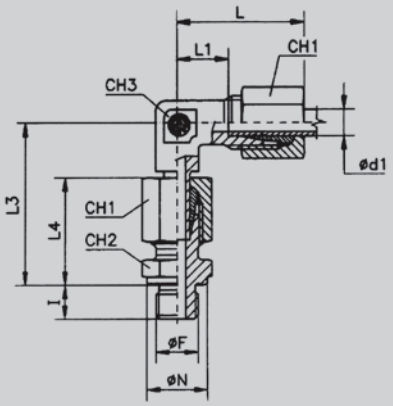

TN 114

Swivel Elbows
可调式直角接头（带接头体）
可连接螺纹形式：B.S.P.标准螺纹
公制外螺纹
密封形式：DIN 3852第二部分的硬性密封结构

系列	Ø 钢管外径 d_1	公称压力 PN PE	尺寸							R				M				重量 kg./100 件
			I	L	L1	b) L3	L4	CH1	CH3	CH2	ØF	ØN	订货型号	CH2	Ø F	Ø N	订货型号	
轻型 L	6	PN 315	8	27	12	34.5	23	14	12	14	1/8″	14	TN 114 - 6 LR	14	10 × 1	14	TN 114 - 6 LM	5.4
	8		12	29	14	37.5	25	17	12	19	1/4″	18	TN 114 - 8 LR	17	12 × 1.5	17	TN 114 - 8 LM	7.5
	10		12	30	15	40	26	19	14	19	1/4″	18	TN 114 - 10 LR	19	14 × 1.5	19	TN 114 - 10 LM	9.2
	12		12	32	17	42	27	22	17	22	3/8″	22	TN 114 - 12 LR	22	16 × 1.5	21	TN 114 - 12 LM	13.2
	15		14	36	21	46.5	29	27	19	27	1/2″	26	TN 114 - 15 LR	24	18 × 1.5	23	TN 114 - 15 LM	22.0
	18		14	40	23.5	50	31	32	24	27	1/2″	26	TN 114 - 18 LR	27	22 × 1.5	27	TN 114 - 18 LM	28.0
	22	PN 160	16	44	27.5	55	33	36	27	32	3/4″	32	TN 114 - 22 LR	32	26 × 1.5	31	TN 114 - 22 LM	37.5
	28		18	47	30.5	59	34	41	36	41	1″	39	TN 114 - 28 LR	41	33 × 2	39	TN 114 - 28 LM	55.8
	35		20	56	34.5	68.5	39	50	41	50	1″ 1/4	49	TN 114 - 35 LR	50	42 × 2	49	TN 114 - 35 LM	90.8
	42		22	63	40	79	42	60	50	55	1″ 1/2	55	TN 114 - 42 LR	55	48 × 2	55	TN 114 - 42 LM	121.0
重型 S	6	a) PE 630	12	31	16	40	28	17	12	19	1/4″	18	TN 114 - 6 SR	17	12 × 1.5	17	TN 114 - 6 SM	8.3
	8		12	32	17	42.5	30	19	14	19	1/4″	18	TN 114 - 8 SR	19	14 × 1.5	19	TN 114 - 8 SM	10.8
	10		12	34	17.5	45	31	22	17	22	3/8″	22	TN 114 - 10 SR	22	16 × 1.5	21	TN 114 - 10 SM	14.9
	12		12	38	21.5	48	33	24	17	22	3/8″	22	TN 114 - 12 SR	24	18 × 1.5	23	TN 114 - 12 SM	19.2
	14		14	40	22	54	37	27	19	27	1/2″	26	TN 114 - 14 SR	27	20 × 1.5	25	TN 114 - 14 SM	25.8
	16	PE 400	14	43	24.5	55	37	30	24	27	1/2″	26	TN 114 - 16 SR	27	22 × 1.5	27	TN 114 - 16 SM	31.9
	20		16	48	26.5	65	42	36	27	32	3/4″	32	TN 114 - 20 SR	32	27 × 2	32	TN 114 - 20 SM	48.2
	25		18	54	30	73	47	46	36	41	1″	39	TN 114 - 25 SR	41	33 × 2	39	TN 114 - 25 SM	92.7
	30	PE 250	20	62	35.5	78.5	50	50	41	50	1″ 1/4	49	TN 114 - 30 SR	50	42 × 2	49	TN 114 - 30 SM	137.0
	38		22	72	41	90.5	57	60	50	55	1″ 1/2	55	TN 114 - 38 SR	55	48 × 2	55	TN 114 - 38 SM	196.7

Overall sizes are with closed fitting.
总长为预安装后的长度。
a) Safety factor = 2 (Thread Metric Parallel)
安全系数 =2 （公制螺纹）
b) TN 114-15 LM L3 = 46

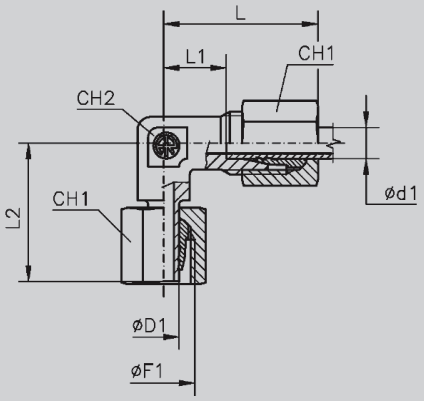

TN 119

Angular rotary fitting

可调向直角接头（不带接头体）

系列	Ø 钢管外径 d_1	公称压力 PN	尺寸								订货型号	重量 kg./100 件
			L	L1	L2	ØD1	ØF1	CH1	CH2			
轻型 L	6	315	27	12	26	6	12 × 1.5	14	12		TN 119 - 6 L	4.0
	8		29	14	27.5	8	14 × 1.5	17	12		TN 119 - 8 L	4.6
	10		30	15	29	10	16 × 1.5	19	14		TN 119 - 10 L	6.5
	12		32	17	29.5	12	18 × 1.5	22	17		TN 119 - 12 L	9.0
	15		36	21	32.5	15	22 × 1.5	27	19		TN 119 - 15 L	14.9
	18		40	23.5	35.5	18	26 × 1.5	32	24		TN 119 - 18 L	21.5
	22	160	44	27.5	38.5	22	30 × 2	36	27		TN 119 - 22 L	28.5
	28		47	30.5	41.5	28	36 × 2	41	36		TN 119 - 28 L	41.0
	35		56	34.5	51	35	45 × 2	50	41		TN 119 - 35 L	65.5
	42		63	40	60	42	52 × 2	60	50		TN 119 - 42 L	99.0
重型 S	6	630	31	16	27	6	14 × 1.5	17	12		TN 119 - 6 S	5.1
	8		32	17	27.5	8	16 × 1.5	19	14		TN 119 - 8 S	7.4
	10		34	17.5	30	10	18 × 1.5	22	17		TN 119 - 10 S	10.0
	12		38	21.5	31	12	20 × 1.5	24	17		TN 119 - 12 S	13.3
	14		40	22	35	14	22 × 1.5	27	19		TN 119 - 14 S	16.5
	16	400	43	24.5	36.5	16	24 × 1.5	30	24		TN 119 - 16 S	23.5
	20		48	26.5	44.5	20	30 × 2	36	27		TN 119 - 20 S	34.0
	25		54	30	50	25	36 × 2	46	36		TN 119 - 25 S	68.0
	30		62	35.5	55	30	42 × 2	50	41		TN 119 - 30 S	97.0
	38	315	72	41	64.5	38	52 × 2	60	50		TN 119 - 38 S	142.0

Overall sizes are with closed fitting.

总长为预安装后的长度。

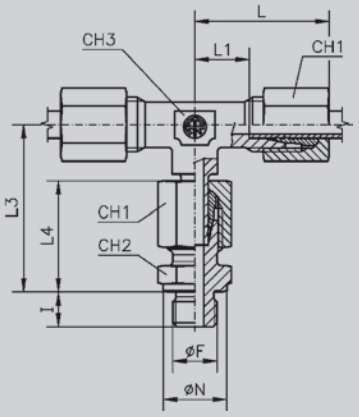

TN 115

Swivel Branch Tees
可调向T型三通接头（带接头体）
可连接螺纹形式：英制圆柱螺纹
公制圆柱螺纹
密封形式：DIN 3852第二部分的硬性密封结构

系列	Ø 钢管外径 d_1	公称压力 PN PE	尺寸							R				M				重量 kg./100 件
			l	L	L1	b) L3	L4	CH1	CH3	CH2	ØF	ØN	订货型号	CH2	Ø F	ØN	订货型号	
轻型 L	6	PN 315	8	27	12	34.5	23	14	12	14	1/8″	14	TN 115 - 6 LR	14	10 × 1	14	TN 115 - 6 LM	7.0
	8		12	29	14	37.5	25	17	12	19	1/4″	18	TN 115 - 8 LR	17	12 × 1.5	17	TN 115 - 8 LM	9.5
	10		12	30	15	40	26	19	14	19	1/4″	18	TN 115 - 10 LR	19	14 × 1.5	19	TN 115 - 10 LM	11.7
	12		12	32	17	42	27	22	17	22	3/8″	22	TN 115 - 12 LR	22	16 × 1.5	21	TN 115 - 12 LM	17.2
	15		14	36	21	46.5	29	27	19	27	1/2″	26	TN 115 - 15 LR	24	18 × 1.5	23	TN 115 - 15 LM	28.0
	18		14	40	23.5	50	31	32	24	27	1/2″	26	TN 115 - 18 LR	27	22 × 1.5	27	TN 115 - 18 LM	38.5
	22	PN 160	16	44	27.5	55	33	36	27	32	3/4″	32	TN 115 - 22 LR	32	26 × 1.5	31	TN 115 - 22 LM	51.0
	28		18	47	30.5	59	34	41	36	41	1″	39	TN 115 - 28 LR	41	33 × 2	39	TN 115 - 28 LM	74.8
	35		20	56	34.5	68.5	39	50	41	50	1″ 1/4	49	TN 115 - 35 LR	50	42 × 2	49	TN 115 - 35 LM	117.8
	42		22	63	40	79	42	60	50	55	1″ 1/2	55	TN 115 - 42 LR	55	48 × 2	55	TN 115 - 42 LM	127.8
重型 S	6	a) PE 630	12	31	16	40	28	17	12	19	1/4″	18	TN 115 - 6 SR	17	12 × 1.5	17	TN 115 - 6 SM	11.3
	8		12	32	17	42.5	30	19	14	19	1/4″	18	TN 115 - 8 SR	19	14 × 1.5	19	TN 115 - 8 SM	15.3
	10		12	34	17.5	45	31	22	17	22	3/8″	22	TN 115 - 10 SR	22	16 × 1.5	21	TN 115 - 10 SM	18.9
	12		12	38	21.5	48	33	24	17	22	3/8″	22	TN 115 - 12 SR	24	18 × 1.5	23	TN 115 - 12 SM	25.7
	14		14	40	22	54	37	27	19	27	1/2″	26	TN 115 - 14 SR	27	20 × 1.5	25	TN 115 - 14 SM	36.3
	16	PE 400	14	43	24.5	55	37	30	24	27	1/2″	26	TN 115 - 16 SR	27	22 × 1.5	27	TN 115 - 16 SM	44.9
	20		16	48	26.5	65	42	36	27	32	3/4″	32	TN 115 - 20 SR	32	27 × 2	32	TN 115 - 20 SM	68.2
	25		18	54	30	73	47	46	36	41	1″	39	TN 115 - 25 SR	41	33 × 2	39	TN 115 - 25 SM	126.7
	30	PE 250	20	62	35.5	78.5	50	50	41	50	1″ 1/4	49	TN 115 - 30 SR	50	42 × 2	49	TN 115 - 30 SM	173.0
	38		22	72	41	90.5	57	60	50	55	1″ 1/2	55	TN 115 - 38 SR	55	48 × 2	55	TN 115 - 38 SM	264.7

Overall sizes are with closed fitting.
总长为预安装后的长度。
a) Safety factor = 2 (Thread Metric Parallel)
安全系数 =2（公制螺纹）
b) TN 115-15 LM L3=46

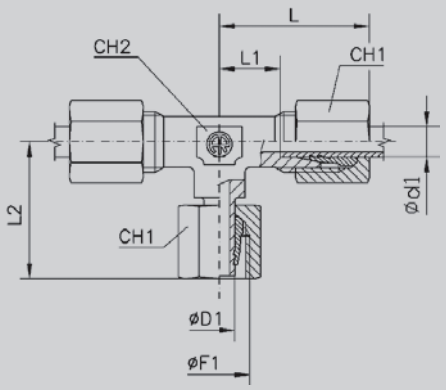

TN 120

Rotary fitting a Tees

可调向T型三通接头（不带接头体）

系列	Ø 钢管外径 d_1	公称压力 PN	尺寸								订货型号	重量 kg./100 件
			L	L1	L2	Ø D1	Ø F1	CH1	CH2			
轻型 L	6	315	27	12	26	6	12 × 1.5	14	12		TN 120 - 6 L	5.6
	8		29	14	27.5	8	14 × 1.5	17	12		TN 120 - 8 L	6.6
	10		30	15	29	10	16 × 1.5	19	14		TN 120 - 10 L	9.0
	12		32	17	29.5	12	18 × 1.5	22	17		TN 120 - 12 L	13.0
	15		36	21	32.5	15	22 × 1.5	27	19		TN 120 - 15 L	20.9
	18		40	23.5	35.5	18	26 × 1.5	32	24		TN 120 - 18 L	32.0
	22	160	44	27.5	38.5	22	30 × 2	36	27		TN 120 - 22 L	42.0
	28		47	30.5	41.5	28	36 × 2	41	36		TN 120 - 28 L	60.0
	35		56	34.5	51	35	45 × 2	50	41		TN 120 - 35 L	92.5
	42		63	40	60	42	52 × 2	60	50		TN 120 - 42 L	136.0
重型 S	6	630	31	16	27	6	14 × 1.5	17	12		TN 120 - 6 S	8.6
	8		32	17	27.5	8	16 × 1.5	19	14		TN 120 - 8 S	11.9
	10		34	17.5	30	10	18 × 1.5	22	17		TN 120 - 10 S	14.0
	12		38	21.5	31	12	20 × 1.5	24	17		TN 120 - 12 S	19.8
	14		40	22	35	14	22 × 1.5	27	19		TN 120 - 14 S	27.0
	16	400	43	24.5	36.5	16	24 × 1.5	30	24		TN 120 - 16 S	36.5
	20		48	26.5	44.5	20	30 × 2	36	27		TN 120 - 20 S	54.0
	25		54	30	50	25	36 × 2	46	36		TN 120 - 25 S	102.0
	30		62	35.5	55	30	42 × 2	50	41		TN 120 - 30 S	133.0
	38	315	72	41	64.5	38	52 × 2	60	50		TN 120 - 38 S	210.0

Overall sizes are with closed fitting.

总长为预安装后的长度。

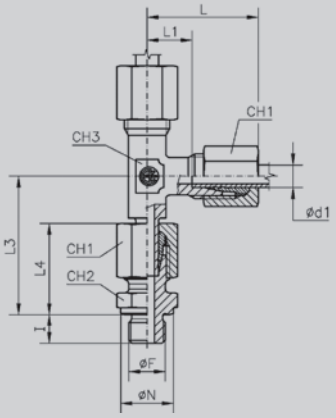

TN 116

Swivel Barrel Tees可调向L型三通接头（带接头体）
可连接螺纹形式：英制圆柱螺纹
公制圆柱螺纹
密封形式：DIN 3852第二部分的硬性密封结构

系列	Ø 钢管外径 d_1	公称压力 PN PE	尺寸							R				M				重量 kg./100 件
			I	L	L1	b) L3	L4	CH1	CH3	CH2	Ø F	Ø N	订货型号	CH2	Ø F	Ø N	订货型号	
轻型 L	6	PN 315	8	27	12	34.5	23	14	12	14	1/8″	14	TN 116 - 6 LR	14	10 × 1	14	TN 116 - 6 LM	6.9
	8		12	29	14	37.5	25	17	12	19	1/4″	18	TN 116 - 8 LR	17	12 × 1.5	17	TN 116 - 8 LM	10.0
	10		12	30	15	40	26	19	14	19	1/4″	18	TN 116 - 10 LR	19	14 × 1.5	19	TN 116 - 10 LM	12.2
	12		12	32	17	42	27	22	17	22	3/8″	22	TN 116 - 12 LR	22	16 × 1.5	21	TN 116 - 12 LM	16.7
	15		14	36	21	46.5	29	27	19	27	1/2″	26	TN 116 - 15 LR	24	18 × 1.5	23	TN 116 - 15 LM	27.0
	18		14	40	23.5	50	31	32	24	27	1/2″	26	TN 116 - 18 LR	27	22 × 1.5	27	TN 116 - 18 LM	36.5
	22	PN 160	16	44	27.5	55	33	36	27	32	3/4″	32	TN 116 - 22 LR	32	26 × 1.5	31	TN 116 - 22 LM	49.0
	28		18	47	30.5	59	34	41	36	41	1″	39	TN 116 - 28 LR	41	33 × 2	39	TN 116 - 28 LM	69.3
	35		20	56	34.5	68.5	39	50	41	50	1″ 1/4	49	TN 116 - 35 LR	50	42 × 2	49	TN 116 - 35 LM	124.8
	42		22	63	40	79	42	60	50	55	1″ 1/2	55	TN 116 - 42 LR	55	48 × 2	55	TN 116 - 42 LM	157.0
重型 S	6	a) PE 630	12	31	16	40	28	17	12	19	1/4″	18	TN 116 - 6 SR	17	12 × 1.5	17	TN 116 - 6 SM	10.8
	8		12	32	17	42.5	30	19	14	19	1/4″	18	TN 116 - 8 SR	19	14 × 1.5	19	TN 116 - 8 SM	14.3
	10		12	34	17.5	45	31	22	17	22	3/8″	22	TN 116 - 10 SR	22	16 × 1.5	21	TN 116 - 10 SM	20.9
	12		12	38	21.5	48	33	24	17	22	3/8″	22	TN 116 - 12 SR	24	18 × 1.5	23	TN 116 - 12 SM	25.2
	14		14	40	22	54	37	27	19	27	1/2″	26	TN 116 - 14 SR	27	20 × 1.5	25	TN 116 - 14 SM	34.3
	16	PE 400	14	43	24.5	55	37	30	24	27	1/2″	26	TN 116 - 16 SR	27	22 × 1.5	27	TN 116 - 16 SM	42.9
	20		16	48	26.5	65	42	36	27	32	3/4″	32	TN 116 - 20 SR	32	27 × 2	32	TN 116 - 20 SM	64.7
	25		18	54	30	73	47	46	36	41	1″	39	TN 116 - 25 SR	41	33 × 2	39	TN 116 - 25 SM	121.7
	30	PE 250	20	62	35.5	78.5	50	50	41	50	1″ 1/4	49	TN 116 - 30 SR	50	42 × 2	49	TN 116 - 30 SM	172.0
	38		22	72	41	90.5	57	60	50	55	1″ 1/2	55	TN 116 - 38 SR	55	48 × 2	55	TN 116 - 38 SM	246.2

Overall sizes are with closed fitting.
总长为预安装后的长度。
a) Safety factor = 2 (Thread Metric Parallel)
安全系数 =2（公制螺纹）
b) TN 116-15 LM L3 = 46

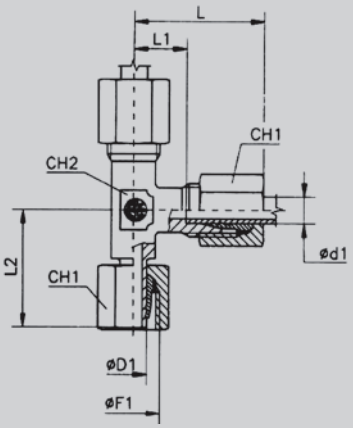

TN 121

Rotary fitting a L

可调向L型三通接头（不带接头体）

系列	Ø 钢管外径 d_1	公称压力 PN	尺寸								订货型号	重量 kg./100 件
			L	L1	L2	Ø D1	Ø F1	CH1	CH2			
轻型 L	6	315	27	12	26	6	12 × 1.5	14	12		TN 121 - 6 L	5.5
	8		29	14	27.5	8	14 × 1.5	17	12		TN 121 - 8 L	7.1
	10		30	15	29	10	16 × 1.5	19	14		TN 121 - 10 L	9.5
	12		32	17	29.5	12	18 × 1.5	22	17		TN 121 - 12 L	12.5
	15		36	21	32.5	15	22 × 1.5	27	19		TN 121 - 15 L	19.9
	18		40	23.5	35.5	18	26 × 1.5	32	24		TN 121 - 18 L	30.0
	22	160	44	27.5	38.5	22	30 × 2	36	27		TN 121 - 22 L	40.0
	28		47	30.5	41.5	28	36 × 2	41	36		TN 121 - 28 L	54.5
	35		56	34.5	51	35	45 × 2	50	41		TN 121 - 35 L	90.5
	42		63	40	60	42	52 × 2	60	50		TN 121 - 42 L	135.0
重型 S	6	630	31	16	27	6	14 × 1.5	17	12		TN 121 - 6 S	7.6
	8		32	17	27.5	8	16 × 1.5	19	14		TN 121 - 8 S	10.9
	10		34	17.5	30	10	18 × 1.5	22	17		TN 121 - 10 S	16.0
	12		38	21.5	31	12	20 × 1.5	24	17		TN 121 - 12 S	19.3
	14		40	22	35	14	22 × 1.5	27	19		TN 121 - 14 S	25.0
	16	400	43	24.5	36.5	16	24 × 1.5	30	24		TN 121 - 16 S	34.5
	20		48	26.5	44.5	20	30 × 2	36	27		TN 121 - 20 S	50.5
	25		54	30	50	25	36 × 2	46	36		TN 121 - 25 S	97.0
	30		62	35.5	55	30	42 × 2	50	41		TN 121 - 30 S	132.0
	38	315	72	41	64.5	38	52 × 2	60	50		TN 121 - 38 S	191.5

Overall sizes are with closed fitting.

总长为预安装后的长度。

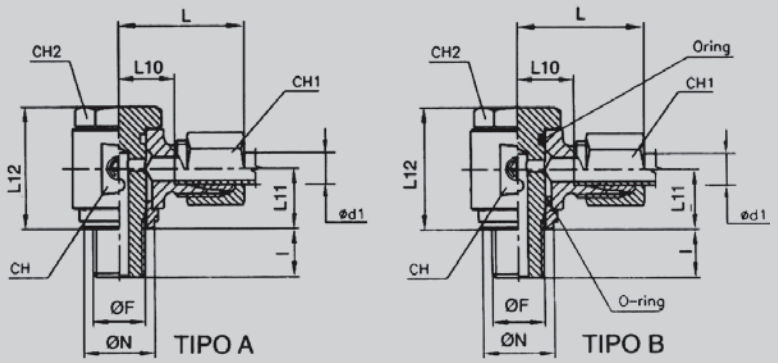

TN 111 R

Banjos
铰接式接头
可连接螺纹形式：英制圆柱螺纹
O型圈密封

* FITTINGS WITH ROUND BODY = ● = 圆柱体
* FITTINGS WITH SQUARE BODY = ■ = 方块体

系列	Ø 钢管外径 d_1	公称压力 PE	尺寸									订货型号	重量 kg./100 件	*	Tipo A= 圆柱体 B= 方块体
			l	L	L10	L12	Ø N	CH1	CH2	CH	Ø F				
超轻型 LL	4	100	6	24.5	13	22	14	10	14	18	1/8″	TN 111 - 4 LLR	4.7	■	A
	5		6	25	11.5	22	14	12	14	18	1/8″	TN 111 - 5 LLR	4.8	■	A
	6		6	25	11.5	22	14	12	14	18	1/8″	TN 111 - 6 LLR	4.9	■	A
	8		6	26	12.5	22	14	14	14	18	1/8″	TN 111 - 8 LLR	5.1	■	A
轻型 L	6	315	8	29	13	27	15	14	17	19	1/8″	TN 111 - 6 LR	7.4	●	A
	8		12	30.5	14.5	30.5	18	17	19	22	1/4″	TN 111 - 8 LR	11.0	●	A
	10		12	32	15.5	30.5	18	19	19	22	1/4″	TN 111 - 10 LR	11.6	●	A
	12		12	36	19.5	38.5	22	22	24	30	3/8″	TN 111 - 12 LR	20.9	●	A
	15		14	39	22.5	48	26	27	27	32	1/2″	TN 111 - 15 LR	32.7	●	A
	18		14	40	22	48	26	32	27	36	1/2″	TN 111 - 18 LR	36.1	●	A
	22	160	16	47	28	56	32	36	32	41	3/4″	TN 111 - 22 LR	55.5	●	A
	28		18	51	31.5	69.5	39	41	41	50	1″	TN 111 - 28 LR	95.6	●	B
	35		20	60	35.5	80.5	49	50	50	60	1″ 1/4	TN 111 - 35 LR	154.2	●	B
	42		22	66.5	41.5	93	55	60	55	70	1″ 1/2	TN 111 - 42 LR	238.7	●	B
重型 S	6	400	12	33	16.5	30.5	18	17	19	22	1/4″	TN 111 - 6 SR	11.7	●	A
	8		12	32.5	16.5	30.5	18	19	19	22	1/4″	TN 111 - 8 SR	12.2	●	A
	10		12	38	20	38.5	22	22	24	30	3/8″	TN 111 - 10 SR	23.0	●	A
	12		12	38	20	38.5	22	24	24	30	3/8″	TN 111 - 12 SR	23.7	●	A
	14		14	42.5	23.5	48	26	27	27	36	1/2″	TN 111 - 14 SR	36.9	●	A
	16		14	43	23	48	26	30	27	36	1/2″	TN 111 - 16 SR	38.6	●	A
	20		16	51.5	27	56	32	36	32	41	3/4″	TN 111 - 20 SR	61.9	●	A
	25	250	18	58	31	69.5	39	46	41	50	1″	TN 111 - 25 SR	111.9	●	B
	30		20	66	36.5	80.5	49	50	50	60	1″ 1/4	TN 111 - 30 SR	177.0	●	B
	38		22	75.5	42.5	93	55	60	55	70	1″ 1/2	TN 111 - 38 SR	273.4	●	B

Overall sizes are with closed fitting.
总长为预安装后的长度。
For fittings made of stainless steel the shape of the body is round.
不锈钢材质的为圆柱体结构。

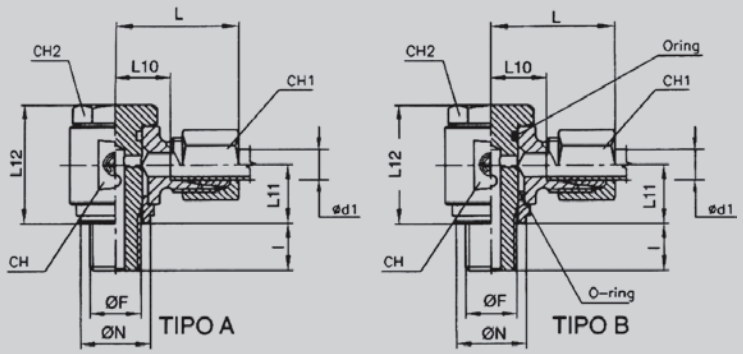

TN 111 M

Banjos
铰接式带ED圈接头
可连接螺纹形式：公制圆柱螺纹

* FITTINGS WITH ROUND BODY = ● = 圆柱体
* FITTINGS WITH SQUARE BODY = ■ = 方块体

系列	Ø 钢管外径 d_1	公称压力 PE	尺寸										订货型号	重量 kg./100 件	*	Tipo A= 圆柱体 B= 方块体
			l	L	L10	L11	L12	Ø N	CH1	CH2	CH	Ø F				
超轻型 LL	4	100	6	24.5	13	10	22	14	10	14	18	8 × 1	TN 111 - 4 LLM	4.6	■	A
	5		6	25	11.5	10	22	14	12	14	18	8 × 1	TN 111 - 5 LLM	4.8	■	A
	6		6	25	11.5	10	22	14	12	14	18	10 × 1	TN 111 - 6 LLM	4.9	■	A
	8		6	26	12.5	10	22	14	14	14	18	10 × 1	TN 111 - 8 LLM	5.1	■	A
轻型 L	6	315	8	29	13	12.5	27	15	14	17	19	10 × 1	TN 111 - 6 LM	7.3	●	A
	8		12	30.5	14.5	15	30.5	17	17	19	22	12 × 1.5	TN 111 - 8 LM	11.0	●	A
	10		12	32	15.5	15	30.5	18	19	19	22	14 × 1.5	TN 111 - 10 LM	11.8	●	A
	12		12	36	19.5	19	38.5	22	22	24	30	16 × 1.5	TN 111 - 12 LM	21.3	●	A
	15		14	39	22.5	21.5	44.5	22	27	24	32	18 × 1.5	TN 111 - 15 LM	29.6	●	A
	18		14	40	22	23	48	26	32	27	36	22 × 1.5	TN 111 - 18 LM	36.0	●	A
	22	160	16	47	28	26	56	32	36	32	41	26 × 1.5	TN 111 - 22 LM	55.5	●	A
	28		18	51	31.5	32	69.5	39	41	41	50	33 × 2	TN 111 - 28 LM	95.2	●	B
	35		20	60	35.5	37	80.5	49	50	50	60	42 × 2	TN 111 - 35 LM	154.9	●	B
	42		22	66.5	41.5	43.5	93	55	60	55	70	48 × 2	TN 111 - 42 LM	239.4	●	B
重型 S	6	400	12	33	16.5	15	30.5	17	17	19	22	12 × 1.5	TN 111 - 6 SM	11.6	●	A
	8		12	32.5	16.5	15	30.5	18	19	19	22	14 × 1.5	TN 111 - 8 SM	12.4	●	A
	10		12	38	20	19	38.5	22	22	24	30	16 × 1.5	TN 111 - 10 SM	22.4	●	A
	12		12	38	20	18	37.5	22	24	24	30	18 × 1.5	TN 111 - 12 SM	24.0	●	A
	14		14	42.5	23.5	23	48	26	27	27	36	20 × 1.5	TN 111 - 14 SM	36.7	●	A
	16		14	43	23	23	48	26	30	27	36	22 × 1.5	TN 111 - 16 SM	39.8	●	A
	20		16	51.5	27	26	56	32	36	32	41	27 × 2	TN 111 - 20 SM	62.4	●	A
	25	250	18	58	31	32	69.5	39	46	41	50	32 × 2	TN 111 - 25 SM	113.2	●	B
	30		20	66	36.5	37	80.5	49	50	50	60	42 × 2	TN 111 - 30 SM	177.5	●	B
	38		22	75.5	42.5	43.5	93	55	60	55	70	48 × 2	TN 111 - 38 SM	273.7	●	B

Overall sizes are with closed fitting.
总长为预安装后的长度。
For fittings made of stainless steel the shape of the body is round.
不锈钢材质为圆柱体结构。

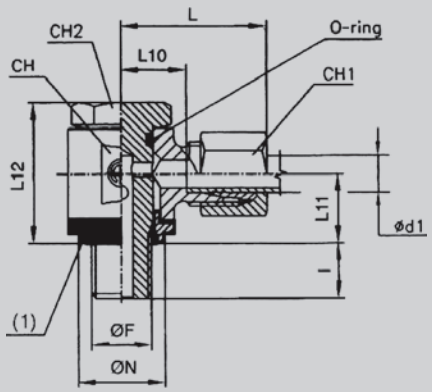

TN 111 GG R

Banjos
铰接式带ED圈接头
可连接螺纹形式：英制圆柱螺纹

系列	Ø 钢管外径 d_1	公称压力 PE	尺寸										订货型号	重量 kg./100 件
			I	L	L10	L11	L12	Ø N	CH1	CH2	CH	Ø F		
轻型 L	6	315	8	29	13	12.5	27	15	14	17	19	1/8″	TN 111 GG - 6 LR	7.4
	8		12	30.5	14.5	15	30.5	19	17	19	22	1/4″	TN 111 GG - 8 LR	11.0
	10		12	32	15.5	15	30.5	19	19	19	22	1/4″	TN 111 GG - 10 LR	11.6
	12		12	36	19.5	19	38.5	22	22	24	30	3/8″	TN 111 GG - 12 LR	20.9
	15		14	39	22.5	23	48	27	27	27	36	1/2″	TN 111 GG - 15 LR	32.7
	18		14	40	22	23	48	27	32	27	36	1/2″	TN 111 GG - 18 LR	36.1
	22	160	16	47	28	26	56	33	36	32	41	3/4″	TN 111 GG - 22 LR	55.5
	28		18	51	31.5	32	69.5	40	41	41	50	1″	TN 111 GG - 28 LR	95.6
	35		20	60	35.5	37	80.5	50	50	50	60	1″ 1/4	TN 111 GG - 35 LR	154.2
	42		22	66.5	41.5	43.5	93	56	60	55	70	1″ 1/2	TN 111 GG - 42 LR	238.7
重型 S	6	400	12	33	16.5	15	30.5	19	17	19	22	1/4″	TN 111 GG - 6 SR	11.7
	8		12	32.5	16.5	15	30.5	19	19	19	22	1/4″	TN 111 GG - 8 SR	12.2
	10		12	38	20	19	38.5	22	22	24	30	3/8″	TN 111 GG - 10 SR	23.0
	12		12	38	20	19	38.5	22	24	24	30	3/8″	TN 111 GG - 12 SR	23.7
	14		14	42.5	23.5	23	48	27	27	27	36	1/2″	TN 111 GG - 14 SR	36.9
	16		14	43	23	23	48	27	30	27	36	1/2″	TN 111 GG - 16 SR	38.6
	20		16	51.5	27	26	56	33	36	32	41	3/4″	TN 111 GG - 20 SR	61.9
	25	250	18	58	31	32	69.5	40	46	41	50	1″	TN 111 GG - 25 SR	111.9
	30		20	66	36.5	37	80.5	50	50	50	60	1″ 1/4	TN 111 GG - 30 SR	177.0
	38		22	75.5	42.5	43.5	93	56	60	55	70	1″ 1/2	TN 111 GG - 38 SR	273.4

Overall sizes are with closed fitting.
总长为预安装后的长度。

Temperature range without pressure reductions with connections fitted with O-Rings in NBR (Perbunan): from -35 to +100℃
适合带橡胶垫的零件工作温度范围：NBR 丁晴橡胶 -35° 至 +100℃

(1) Vulcanized ring
新型的设计在“I”处改为配硫化环。

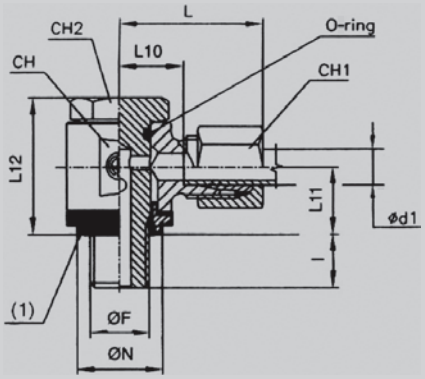

TN 111 GG M

Banjos铰接式带ED圈接头
可连接螺纹形式：公制圆柱螺纹

系列	Ø 钢管外径 d_1	公称压力 PE	尺寸										订货型号	重量 kg./100 件
			l	L	L10	L11	L12	Ø N	CH1	CH2	CH	Ø F		
轻型 L	6	315	8	29	13	12.5	27	15	14	17	19	10 × 1	TN 111 GG - 6 LM	7.3
	8		12	30.5	14.5	15	30.5	18	17	19	22	12 × 1.5	TN 111 GG - 8 LM	11.0
	10		12	32	15.5	15	30.5	19	19	19	22	14 × 1.5	TN 111 GG - 10 LM	11.9
	12		12	36	19.5	19	38.5	22	22	24	30	16 × 1.5	TN 111 GG - 12 LM	21.3
	15		14	39	22.5	21.5	44.5	24	27	24	36	18 × 1.5	TN 111 GG - 15 LM	29.6
	18		14	40	22	23	48	27	32	27	36	22 × 1.5	TN 111 GG - 18 LM	36.0
	22	160	16	47	28	26	56	33	36	32	41	26 × 1.5	TN 111 GG - 22 LM	55.5
	28		18	51	31.5	32	69.5	40	41	41	50	33 × 2	TN 111 GG - 28 LM	95.2
	35		20	60	35.5	37	80.5	50	50	50	60	42 × 2	TN 111 GG - 35 LM	154.9
	42		22	66.5	41.5	43.5	93	56	60	55	70	48 × 2	TN 111 GG - 42 LM	239.4
重型 S	6	400	12	33	16.5	15	30.5	18	17	19	22	12 × 1.5	TN 111 GG - 6 SM	11.6
	8		12	32.5	16.5	15	30.5	19	19	19	22	14 × 1.5	TN 111 GG - 8 SM	12.4
	10		12	38	20	19	38.5	22	22	24	30	16 × 1.5	TN 111 GG - 10 SM	22.4
	12		12	38	20	18	37.5	24	24	24	30	18 × 1.5	TN 111 GG - 12 SM	24.0
	14		14	42.5	23.5	23	48	27	27	27	36	20 × 1.5	TN 111 GG - 14 SM	36.7
	16		14	43	23	23	48	27	30	27	36	22 × 1.5	TN 111 GG - 16 SM	39.8
	20		16	51.5	27	26	56	33	36	32	41	27 × 2	TN 111 GG - 20 SM	62.4
	25	250	18	58	31	32	69.5	40	46	41	50	32 × 2	TN 111 GG - 25 SM	113.2
	30		20	66	36.5	37	80.5	50	50	50	60	42 × 2	TN 111 GG - 30 SM	177.5
	38		22	75.5	42.5	43.5	93	56	60	55	70	48 × 2	TN 111 GG - 38 SM	273.7

Overall sizes are with closed fitting.
总长为装配后的长度

Temperature range without pressure reductions with connections fitted with O-Rings in NBR (Perbunan): from -35 to +100℃
适合带橡胶垫的零件工作温度范围：NBR 丁晴橡胶 -35° 至 +100℃

(1) Vulcanized ring
新型的设计在“l”处改为配硫化环。

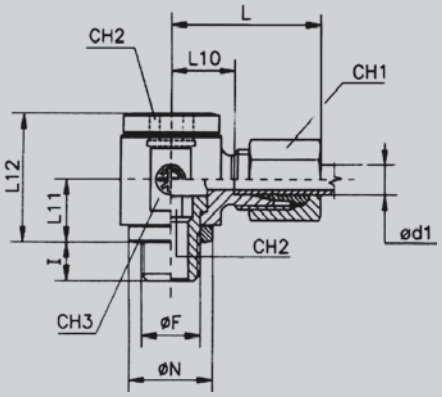

TN 130 R

Rotary fitting without neck
可旋转铰接式接头
可连接螺纹形式：英制圆柱螺纹

系列	Ø 钢管外径 d_1	公称压力 PE	尺寸										订货型号	重量 kg./100 件
			Ø F	Ø N	I	L	L10	L11	L12	CH1	CH2	CH3		
轻型 L	6	250	1/8″	14	8	27	12.5	12	24	14	6	19	TN 130 - 6 LR	5.9
	8		1/4″	18	12	29	14.5	16	30	17	8	22	TN 130 - 8 LR	10.5
	10		1/4″	18	12	30	15.5	16	30	19	8	22	TN 130 - 10 LR	11.3
	12		3/8″	22	12	33	18	18	37	22	10	27	TN 130 - 12 LR	18.0
	15		1/2″	26	14	37	22	21	42	27	12	32	TN 130 - 15 LR	24.7
	18	100	1/2″	26	14	38	21.5	23	46	32	12	36	TN 130 - 18 LR	26.9
	22		3/4″	32	16	45	28.5	28	58	36	17	46	TN 130 - 22 LR	54.6
	28		1″	39	18	48	31.5	32	64	41	22	50	TN 130 - 28 LR	83.0
	35		1″ 1/4	49	20	57	35.5	37	76	50	27	60	TN 130 - 35 LR	117.3
	42		1″ 1/2	55	22	63	40	42	85	60	32	70	TN 130 - 42 LR	224.4
重型 S	6	* 400	1/4″	18	12	31	16.5	16	30	17	8	22	TN 130 - 6 SR	10.9
	8		1/4″	18	12	31	16.5	16	30	19	8	22	TN 130 - 8 SR	11.4
	10		3/8″	22	12	35	18.5	18	37	22	10	27	TN 130 - 10 SR	19.0
	12		3/8″	22	12	35	18.5	18	37	24	10	27	TN 130 - 12 SR	19.6
	14		1/2″	26	14	41	23	21	42	27	12	32	TN 130 - 14 SR	29.7
	16		1/2″	26	14	41	22.5	23	46	30	12	36	TN 130 - 16 SR	30.7
	20		3/4″	32	16	49	27.5	28	58	36	17	46	TN 130 - 20 SR	75.3
	25	* 250	1″	39	18	55	31	32	64	46	22	50	TN 130 - 25 SR	101.9
	30		1″ 1/4	49	20	63	36.5	37	76	50	27	60	TN 130 - 30 SR	158.0
	38		1″ 1/2	55	22	72	41	42	85	60	32	70	TN 130 - 38 SR	243.2

* Safety factor 1.6
安全系数 1.6

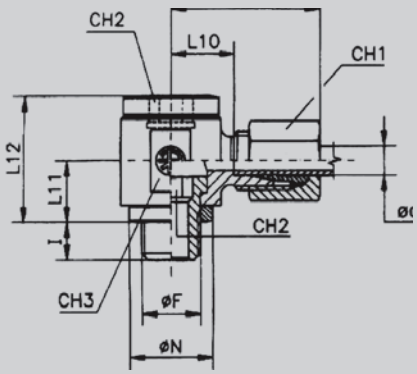

TN 130 M

Rotary fitting without neck
可旋转铰接式接头
可连接螺纹形式：公制圆柱螺纹

系列	Ø 钢管外径 d_1	公称压力 PE	尺寸										订货型号	重量 kg./100 件
			Ø F	Ø N	I	L	L10	L11	L12	CH1	CH2	CH3		
轻型 L	6	250	M 10 × 1	14	8	27	12.5	12	24	14	6	19	TN 130 - 6 LM	6.2
	8		M 12 × 1.5	17	12	29	14.5	15	30	17	6	22	TN 130 - 8 LM	10.0
	10		M 14 × 1.5	19	12	30	15.5	16	30	19	8	22	TN 130 - 10 LM	11.4
	12		M 16 × 1.5	21	12	33	18	18	37	22	10	27	TN 130 - 12 LM	17.9
	15		M 18 × 1.5	23	12	36	21	20	40	27	12	30	TN 130 - 15 LM	24.1
	18	100	M 22 × 1.5	27	14	38	21.5	23	46	32	14	36	TN 130 - 18 LM	30.1
	22		M 26 × 1.5	31	16	42	26	25	51	36	17	41	TN 130 - 22 LM	39.9
	28		M 33 × 2	39	18	48	31.5	32	64	41	22	50	TN 130 - 28 LM	82.5
	35		M 42 × 2	49	20	57	35.5	37	76	50	27	60	TN 130 - 35 LM	116.1
	42		M 48 × 2	55	22	63	40	42	85	60	32	70	TN 130 - 42 LM	224.0
重型 S	6	* 400	M 12 × 1.5	17	12	31	16.5	15	30	17	6	22	TN 130 - 6 SM	9.2
	8		M 14 × 1.5	19	12	31	16.5	16	30	19	8	22	TN 130 - 8 SM	11.6
	10		M 16 × 1.5	21	12	35	18.5	18	37	22	10	27	TN 130 - 10 SM	18.9
	12		M 18 × 1.5	23	12	37	20.5	20	41	24	12	30	TN 130 - 12 SM	24.0
	14		M 20 × 1.5	25	14	41	23	21	42	27	12	32	TN 130 - 14 SM	30.2
	16		M 22 × 1.5	27	14	41	22.5	23	46	30	14	36	TN 130 - 16 SM	38.9
	20		M 27 × 2	32	16	49	27.5	28	58	36	17	46	TN 130 - 20 SM	75.8
	25	* 250	M 33 × 2	39	18	55	31	32	64	46	22	50	TN 130 - 25 SM	101.4
	30		M 42 × 2	49	20	63	36.5	37	76	50	27	60	TN 130 - 30 SM	156.8
	38		M 48 × 2	55	22	72	41	42	85	60	32	70	TN 130 - 38 SM	242.8

* Safety factor 1.6
安全系数 1.6

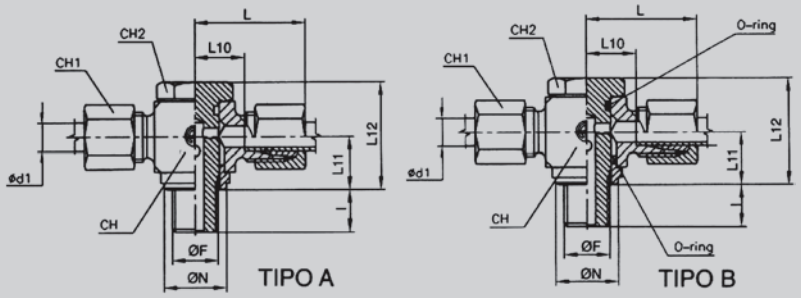

TN 136 R

Double orientable fitting
双向铰接式接头
可连接螺纹形式：英制圆柱螺纹

系列	Ø 钢管外径 d_1	公称压力 PE	尺寸										系列	重量 kg./100 件	形式
			I	L	L10	L11	L12	Ø N	CH1	CH2	CH	Ø F			
超轻型 LL	4	100	6	24.5	13	10	22	14	10	14	18	1/8″	TN 136 - 4 LLR *	5.3	A
	5		6	25	11.5	10	22	14	12	14	18	1/8″	TN 136 - 5 LLR *	5.8	A
	6		6	25	11.5	10	22	14	12	14	18	1/8″	TN 136 - 6 LLR *	6.7	A
	8		6	26	12.5	10	22	14	14	14	18	1/8″	TN 136 - 8 LLR *	6.6	A
轻型 L	6	315	8	29	13	12.5	27	15	14	17	20	1/8″	TN 136 - 6 LR	9.8	A
	8		12	30	14	15	30.5	18	17	19	22	1/4″	TN 136 - 8 LR	13.6	A
	10		12	31.5	15	15	30.5	18	19	19	22	1/4″	TN 136 - 10 LR	14.7	A
	12		12	34	17.5	19	38.5	22	22	24	27	3/8″	TN 136 - 12 LR	23.4	A
	15		14	36.5	20	23	48	26	27	27	36	1/2″	TN 136 - 15 LR	38.4	A
	18		14	39	21	23	48	26	32	27	36	1/2″	TN 136 - 18 LR	44.0	A
	22	160	16	46	27	26	56	32	36	32	41	3/4″	TN 136 - 22 LR	73.8	A
	28		18	51	31.5	32	69.5	39	41	41	50	1″	TN 136 - 28 LR	114.5	B
	35		20	60	35.5	37	80.5	49	50	50	60	1″ 1/4	TN 136 - 35 LR	194.1	B
	42		22	65	40	43.5	93	55	60	55	70	1″ 1/2	TN 136 - 42 LR	275.4	B
重型 S	6	400	12	32.5	16	15	30.5	18	17	19	22	1/4″	TN 136 - 6 SR	14.9	A
	8		12	32	16	15	30.5	18	19	19	22	1/4″	TN 136 - 8 SR	15.9	A
	10		12	36	18	19	38.5	22	22	24	27	3/8″	TN 136 - 10 SR	26.6	A
	12		12	36	18	19	38.5	22	24	24	27	3/8″	TN 136 - 12 SR	27.9	A
	14		14	41	22	23	48	26	27	27	36	1/2″	TN 136 - 14 SR	42.0	A
	16		14	41.5	21.5	23	48	26	30	27	36	1/2″	TN 136 - 16 SR	45.3	A
	20		16	52.5	28	26	56	32	36	32	45	3/4″	TN 136 - 20 SR	92.5	A
	25	250	18	58	31	32	69.5	39	46	41	50	1″	TN 136 - 25 SR	149.9	B
	30		20	66	36.5	37	80.5	49	50	50	60	1″ 1/4	TN 136 - 30 SR	227.4	B
	38		22	74	41	43.5	93	55	60	55	70	1″ 1/2	TN 136 - 38 SR	324.9	B

Overall sizes are with closed fitting.
总长为预安装后的长度。
Temperature range without pressure reductions with connections fitted with O-Rings in NBR (Perbunan): from -35 to +100℃
适合带橡胶垫的零件工作温度范围：NBR 丁晴橡胶 -35° 至 +100℃
* AVAILABLE WHILE STOCKS LAST
库存量随订单而变化，交期另行通知

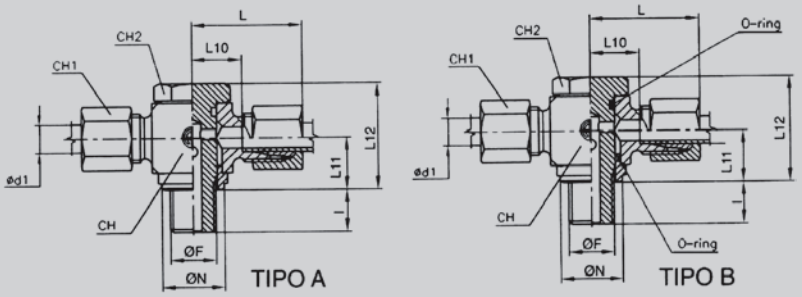

TN 136 M

Double orientable fitting
双向铰接式接头
可连接螺纹形式：公制圆柱螺纹

系列	Ø 钢管外径 d_1	公称压力 PE	尺寸										订货型号	重量 kg./100 件	形式
			l	L	L10	L11	L12	Ø N	CH1	CH2	CH	Ø F			
超轻型 LL	4	100	6	24.5	13	10	22	14	10	14	18	8 × 1	TN 136 - 4 LLM *	5.2	A
	5		6	25	11.5	10	22	14	12	14	18	8 × 1	TN 136 - 5 LLM *	5.6	A
	6		6	25	11.5	10	22	14	12	14	18	10 × 1	TN 136 - 6 LLM *	5.6	A
	8		6	26	12.5	10	22	14	14	14	18	10 × 1	TN 136 - 8 LLM *	6.7	A
轻型 L	6	315	8	29	13	12.5	27	15	14	17	20	10 × 1	TN 136 - 6 LM	9.7	A
	8		12	30	14	15	30.5	17	17	19	22	12 × 1.5	TN 136 - 8 LM	13.4	A
	10		12	31.5	15	15	30.5	18	19	19	22	14 × 1.5	TN 136 - 10 LM	15.0	A
	12		12	34	17.5	19	38.5	22	22	24	27	16 × 1.5	TN 136 - 12 LM	23.8	A
	15		14	36.5	20	21.5	44.5	22	27	24	36	18 × 1.5	TN 136 - 15 LM	35.1	A
	18		14	39	21	23	48	26	32	27	36	22 × 1.5	TN 136 - 18 LM	44.7	A
	22	160	16	46	27	26	56	32	36	32	41	26 × 1.5	TN 136 - 22 LM	73.8	A
	28		18	51	31.5	32	69.5	39	41	41	50	33 × 2	TN 136 - 28 LM	114.1	B
	35		20	60	35.5	37	80.5	49	50	50	60	42 × 2	TN 136 - 35 LM	194.8	B
	42		22	65	40	43.5	93	55	60	55	70	48 × 2	TN 136 - 42 LM	276.1	B
重型 S	6	400	12	32.5	16	15	30.5	17	17	19	22	12 × 1.5	TN 136 - 6 SM	14.7	A
	8		12	32	16	15	30.5	18	19	19	22	14 × 1.5	TN 136 - 8 SM	16.2	A
	10		12	36	18	19	38.5	22	22	24	27	16 × 1.5	TN 136 - 10 SM	26.1	A
	12		12	36	18	18	37.5	22	24	24	27	18 × 1.5	TN 136 - 12 SM	28.4	A
	14		14	41	22	23	48	26	27	27	36	20 × 1.5	TN 136 - 14 SM	43.6	A
	16		14	41.5	21.5	23	48	26	30	27	36	22 × 1.5	TN 136 - 16 SM	48.5	A
	20		16	52.5	28	26	56	32	36	32	45	27 × 2	TN 136 - 20 SM	93.0	A
	25	250	18	58	31	32	69.5	39	46	41	50	32 × 2	TN 136 - 25 SM	151.2	B
	30		20	66	36.5	37	80.5	49	50	50	60	42 × 2	TN 136 - 30 SM	227.8	B
	38		22	74	41	43.5	93	55	60	55	70	48 × 2	TN 136 - 38 SM	325.0	B

Overall sizes are with closed fitting.
总长为预安装后的长度。

Temperature range without pressure reductions with connections fitted with O-Rings in NBR (Perbunan): from -35 to +100℃
适合带橡胶垫的零件工作温度范围：NBR 丁晴橡胶 -35° 至 +100℃

* AVAILABLE WHILE STOCKS LAST
库存量随订单而变化，交期另行通知

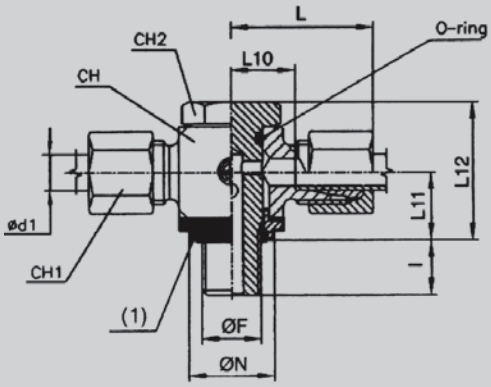

TN 136 GG R

Double orientable fitting
双向带ED圈铰接式接头
可连接螺纹形式：英制直螺纹

系列	Ø 钢管外径 d_1	公称压力 PE	尺寸										订货型号	重量 kg./100 件
			I	L	L10	L11	L12	Ø N	CH1	CH2	CH	Ø F		
轻型 L	6	315	8	29	13	12.5	27	15	14	17	20	1/8″	TN 136 GG - 6 LR	9.8
	8		12	30	14	15	30.5	19	17	19	22	1/4″	TN 136 GG - 8 LR	13.6
	10		12	31.5	15	15	30.5	19	19	19	22	1/4″	TN 136 GG - 10 LR	14.7
	12		12	34	17.5	19	38.5	22	22	24	27	3/8″	TN 136 GG - 12 LR	23.4
	15		14	36.5	20	23	48	27	27	27	36	1/2″	TN 136 GG - 15 LR	38.4
	18		14	39	21	23	48	27	32	27	36	1/2″	TN 136 GG - 18 LR	44.0
	22	160	16	46	27	26	56	33	36	32	41	3/4″	TN 136 GG - 22 LR	73.8
	28		18	51	31.5	32	69.5	40	41	41	50	1″	TN 136 GG - 28 LR	114.5
	35		20	60	35.5	37	80.5	50	50	50	60	1″ 1/4	TN 136 GG - 35 LR	194.1
	42		22	65	40	43.5	93	56	60	55	70	1″ 1/2	TN 136 GG - 42 LR	275.4
重型 S	6	400	12	32.5	16	15	30.5	19	17	19	22	1/4″	TN 136 GG - 6 SR	14.9
	8		12	32	16	15	30.5	19	19	19	22	1/4″	TN 136 GG - 8 SR	15.9
	10		12	36	18	19	38.5	22	22	24	27	3/8″	TN 136 GG - 10 SR	26.6
	12		12	36	18	19	38.5	22	24	24	27	3/8″	TN 136 GG - 12 SR	27.9
	14		14	41	22	23	48	27	27	27	36	1/2″	TN 136 GG - 14 SR	42.0
	16		14	41.5	21.5	23	48	27	30	27	36	1/2″	TN 136 GG - 16 SR	45.3
	20		16	52.5	28	26	56	33	36	32	45	3/4″	TN 136 GG - 20 SR	92.5
	25	250	18	58	31	32	69.5	40	46	41	50	1″	TN 136 GG - 25 SR	149.9
	30		20	66	36.5	37	80.5	50	50	50	60	1″ 1/4	TN 136 GG - 30 SR	227.4
	38		22	74	41	43.5	93	56	60	55	70	1″ 1/2	TN 136 GG - 38 SR	324.9

Overall sizes are with closed fitting.
总长为预安装后的长度。

Temperature range without pressure reductions with connections fitted with O-Rings in NBR (Perbunan): from -35 to +100℃

适合带橡胶垫的零件工作温度范围：NBR 丁晴橡胶 -35° 至 +100℃

(1) Vulcanized ring
新型的设计在“I”处改为配硫化环。

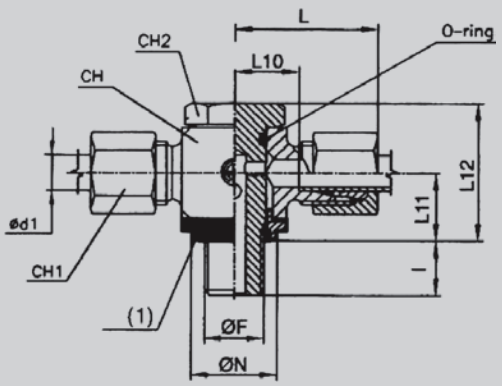

TN 136 GG M

Double orientable fitting
双向带ED圈铰接式接头
可连接螺纹形式：公制圆柱螺纹

系列	Ø 钢管外径 d_1	公称压力 PE	尺寸										订货型号	重量 kg./100 件
			I	L	L10	L11	L12	Ø N	CH1	CH2	CH	Ø F		
轻型 L	6	315	8	29	13	12.5	27	15	14	17	20	10 × 1	TN 136 GG - 6 LM	9.7
	8		12	30	14	15	30.5	18	17	19	22	12 × 1.5	TN 136 GG - 8 LM	13.4
	10		12	31.5	15	15	30.5	19	19	19	22	14 × 1.5	TN 136 GG - 10 LM	15.0
	12		12	34	17.5	19	38.5	22	22	24	27	16 × 1.5	TN 136 GG - 12 LM	23.8
	15		14	36.5	20	21.5	44.5	24	27	24	36	18 × 1.5	TN 136 GG - 15 LM	35.1
	18		14	39	21	23	48	27	32	27	36	22 × 1.5	TN 136 GG - 18 LM	44.7
	22	160	16	46	27	26	56	33	36	32	41	26 × 1.5	TN 136 GG - 22 LM	73.8
	28		18	51	31.5	32	69.5	40	41	41	50	33 × 2	TN 136 GG - 28 LM	114.1
	35		20	60	35.5	37	80.5	50	50	50	60	42 × 2	TN 136 GG - 35 LM	194.8
	42		22	65	40	43.5	93	56	60	55	70	48 × 2	TN 136 GG - 42 LM	276.1
重型 S	6	400	12	32.5	16	15	30.5	18	17	19	22	12 × 1.5	TN 136 GG - 6 SM	14.7
	8		12	32	16	15	30.5	19	19	19	22	14 × 1.5	TN 136 GG - 8 SM	16.2
	10		12	36	18	19	38.5	22	22	24	27	16 × 1.5	TN 136 GG - 10 SM	26.1
	12		12	36	18	18	37.5	24	24	24	27	18 × 1.5	TN 136 GG - 12 SM	28.4
	14		14	41	22	23	48	27	27	27	36	20 × 1.5	TN 136 GG - 14 SM	43.6
	16		14	41.5	21.5	23	48	27	30	27	36	22 × 1.5	TN 136 GG - 16 SM	48.5
	20		16	52.5	28	26	56	33	36	32	45	27 × 2	TN 136 GG - 20 SM	93.0
	25	250	18	58	31	32	69.5	40	46	41	50	32 × 2	TN 136 GG - 25 SM	151.2
	30		20	66	36.5	37	80.5	50	50	50	60	42 × 2	TN 136 GG - 30 SM	227.8
	38		22	74	41	43.5	93	56	60	55	70	48 × 2	TN 136 GG - 38 SM	325.0

Overall sizes are with closed fitting.
总长为预安装后的长度。

Temperature range without pressure reductions with connections fitted with O-Rings in NBR (Perbunan): from -35 to +100℃
适合带橡胶垫的零件工作温度范围：NBR 丁晴橡胶 -35° 至 +100℃

(1) Vulcanized ring
新型的设计在“I”处改为配硫化环。

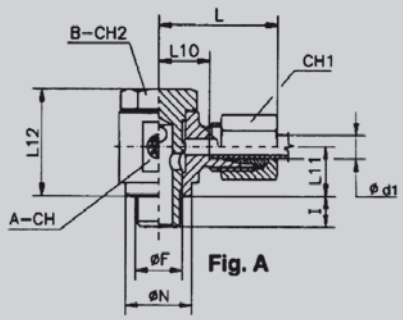

Fig. A

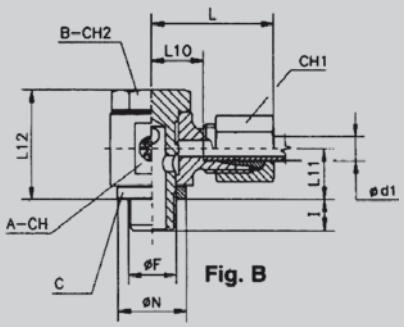

Fig. B

TN 131 R

Banjos
铰接式接头
可连接螺纹形式：英制螺纹

Up to the pipe 15 L. the fittings are supplied as per above shown figure (without ring – Fig. A)
15L 以下尺寸的铰接式接头形式如 A 图所示（不带金属密封圈）
As of pipe 16 S. the fittings are supplied as per above shown figure (with ring – Fig. B)
16S 以上尺寸的铰接式接头形式如 B 图所示（带金属密封圈）

系列	Ø 钢管外径 d_1	公称压力 PE	尺寸										订货型号				重量 kg./100 件
			CH	CH1	CH2	I	Ø F	Ø N	L	L10	L11	L12	Complete fitting	Body A	Pin B	C RingC	
超轻型 LL	4	100	14	10	14	6	1/8"	14.5	20	13	10	21.5	TN 131 - 4 LLR	TN 131A - 4 LLR	TN 131B - 4 LLR	–	3.0
	5		14	12	14	6	1/8"	14.5	20	11.5	10	21.5	TN 131 - 5 LLR	TN 131A - 5 LLR	TN 131B - 5 LLR	–	3.3
	6		14	12	14	6	1/8"	14.5	20	11.5	10	21.5	TN 131 - 6 LLR	TN 131A - 6 LLR	TN 131B - 6 LLR	–	3.4
	8		14	14	14	6	1/8"	14.5	21	12.5	10	21.5	TN 131 - 8 LLR	TN 131A - 8 LLR	TN 131B - 8 LLR	–	3.7
轻型 L	6	250	14	14	14	6	1/8"	14.5	26	11	10	21.5	TN 131 - 6 LR	TN 131A - 6 LR	TN 131B - 6 LR	–	4.2
	8		19	17	19	9	1/4"	18.5	28	14	13	27.5	TN 131 - 8 LR	TN 131A - 8 LR	TN 131B - 8 LR	–	7.8
	10		19	19	19	9	1/4"	18.5	29	13.5	13	27.5	TN 131 - 10 LR	TN 131A - 10 LR	TN 131B - 10 LR	–	8.5
	12		22	22	22	9	3/8"	22.5	30	16	16	34	TN 131 - 12 LR	TN 131A - 12 LR	TN 131B - 12 LR	–	14.5
	15		30	27	27	11	1/2"	26.5	34	19.5	22	45	TN 131 - 15 LR	TN 131A - 15 LR	TN 131B - 15 LR	–	19.5
	18	160	30	32	27	11	1/2"	26	36	19.5	21	44	TN 131 - 18 LR	TN 131A - 18 LR	TN 131B - 18 LR	TN 131C - 18 LR	21.0
	22		36	36	32	13	3/4"	32	42	25.5	23	48	TN 131 - 22 LR	TN 131A - 22 LR	TN 131B - 22 LR	TN 131C - 22 LR	39.0
重型 S	6	250	19	17	19	9	1/4"	18.5	30	14.5	13	27.5	TN 131 - 6 SR	TN 131A - 6 SR	TN 131B - 6 SR	–	8.0
	8		19	19	19	9	1/4"	18.5	30	14.5	13	27.5	TN 131 - 8 SR	TN 131A - 8 SR	TN 131B - 8 SR	–	9.7
	10		22	22	22	9	3/8"	22.5	33	15.5	16	34	TN 131 - 10 SR	TN 131A - 10 SR	TN 131B - 10 SR	–	12.5
	12		22	24	22	9	3/8"	22.5	33	15.5	16	34	TN 131 - 12 SR	TN 131A - 12 SR	TN 131B - 12 SR	–	14.5
	14		30	27	27	11	1/2"	26.5	38	19.5	22	45	TN 131 - 14 SR	TN 131A - 14 SR	TN 131B - 14 SR	–	21.6
	16	160	30	30	27	11	1/2"	26	39	19	21	44	TN 131 - 16 SR	TN 131A - 16 SR	TN 131B - 16 SR	TN 131C - 16 SR	28.0
	20		36	36	32	13	3/4"	32	45	22.5	23	48	TN 131 - 20 SR	TN 131A - 20 SR	TN 131B - 20 SR	TN 131C - 20 SR	43.0

Overall sizes are with closed fitting.
总长为预安装后的长度。

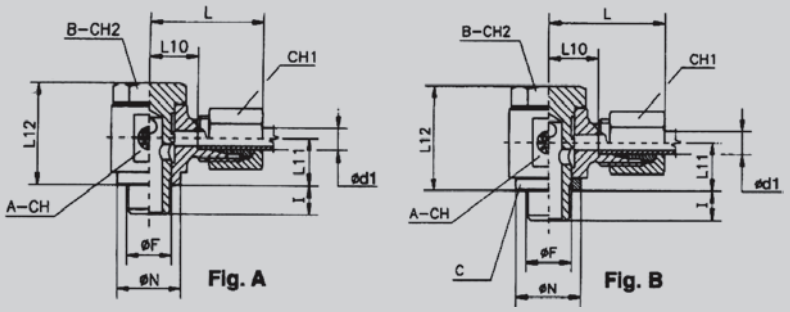

TN 131 M

Banjos
铰接式接头
可连接螺纹形式：公制圆柱螺纹

Up to the pipe 15 L. the fittings are supplied as per above shown figure (without ring – Fig. A)
15L 以下尺寸的铰接式接头形式如 A 图所示（不带金属密封圈）
As of pipe 16 S. the fittings are supplied as per above shown figure (with ring – Fig. B)
16S 以上尺寸的铰接式接头形式如 B 图所示（带金属密封圈）

系列	Ø 钢管外径 d_1	公称压力 PE	尺寸										订货型号				重量 kg./100 件
			CH	CH1	CH2	I	ØF	ØN	L	L10	L11	L12	Complete fitting	Body A	Pin B	Ring C	
超轻型 LL	4	100	14	10	14	6	8 × 1	12.5	21	13	10	21.5	TN 131 - 4 LLM	TN 131A - 4 LLM	TN 131B - 4 LLM	–	2.7
	5		14	12	14	6	8 × 1	14.5	22	11.5	10	21.5	TN 131 - 5 LLM	TN 131A - 5 LLM	TN 131B - 5 LLM	–	3.2
	6		14	12	14	6	10 × 1	14.5	22	11.5	10	21.5	TN 131 - 6 LLM	TN 131A - 6 LLM	TN 131B - 6 LLM	–	3.4
	8		14	14	14	6	10 × 1	14.5	23	12.5	10	21.5	TN 131 - 8 LLM	TN 131A - 8 LLM	TN 131B - 8 LLM	–	3.7
轻型 L	6	250	14	14	14	6	10 × 1	14.5	25	11	10	21.5	TN 131 - 6 LM	TN 131A - 6 LM	TN 131B - 6 LM	–	3.9
	8		19	17	19	9	12 × 1.5	18.5	27	14	13	27.5	TN 131 - 8 LM	TN 131A - 8 LM	TN 131B - 8 LM	–	7.0
	10		19	19	19	9	14 × 1.5	18.5	27	13.5	13	27.5	TN 131 - 10 LM	TN 131A - 10 LM	TN 131B - 10 LM	–	8.5
	12		22	22	22	9	16 × 1.5	21.5	30	16	16	34	TN 131 - 12 LM	TN 131A - 12 LM	TN 131B - 12 LM	–	11.3
	15		24	27	24	9	18 × 1.5	23.5	32	17	17	37	TN 131 - 15 LM	TN 131A - 15 LM	TN 131B - 15 LM	–	16.5
	18	160	30	32	27	11	22 × 1.5	27	35	19.5	21	44	TN 131 - 18 LM	TN 131A - 18 LM	TN 131B - 18 LM	TN 131C - 18 LM	27.0
	22		36	36	32	13	26 × 1.5	32	40	25.5	23	48	TN 131 - 22 LM	TN 131A - 22 LM	TN 131B - 22 LM	TN 131C - 22 LM	36.0
重型 S	6	250	19	17	19	9	12 × 1.5	18.5	28	14.5	13	27.5	TN 131 - 6 SM	TN 131A - 6 SM	TN 131B - 6 SM	–	6.8
	8		19	19	19	9	14 × 1.5	18.5	29	14.5	13	27.5	TN 131 - 8 SM	TN 131A - 8 SM	TN 131B - 8 SM	–	9.5
	10		22	22	22	9	16 × 1.5	22.5	33	15.5	16	34	TN 131 - 10 SM	TN 131A - 10 SM	TN 131B - 10 SM	–	12.5
	12		24	24	22	9	18 × 1.5	23.5	34	15.5	16	34	TN 131 - 12 SM	TN 131A - 12 SM	TN 131B - 12 SM	–	17.0
	14		30	27	27	10	20 × 1.5	26.5	36	19.5	22	45	TN 131 - 14 SM	TN 131A - 14 SM	TN 131B - 14 SM	–	21.0
	16	160	30	30	27	11	22 × 1.5	27	40	19	21	44	TN 131 - 16 SM	TN 131A - 16 SM	TN 131B - 16 SM	TN 131C - 16 SM	28.0
	20		36	36	32	13	27 × 2	32	46	22.5	23	48	TN 131 - 20 SM	TN 131A - 20 SM	TN 131B - 20 SM	TN 131C - 20 SM	43.0

Overall sizes are with closed fitting.
总长为预安装后的长度。

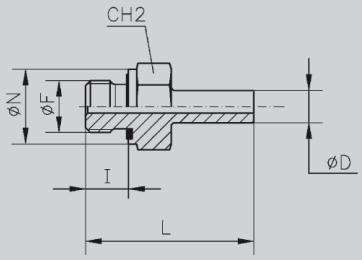

TN 126 GG
未预装卡套

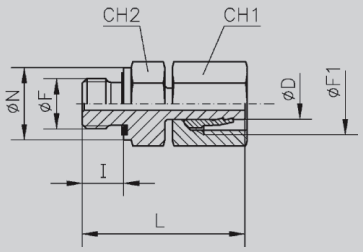

TN 126A GG
未预装卡套

TN 126 GG-R - TN 126A GG-R

Stud /Standpipe Adaptors Packing ring
可调向直通接头
可连接螺纹形式：英制圆柱螺纹
密封形式：DIN 3852第十一部分的
带弹性密封体结构

系列	Ø 钢管外径 d_1	公称压力 PN	尺寸 L	Ø F	Ø D	l	CH2	Ø N	Ø F1	CH1	订货型号	重量 kg./100 件	订货型号	重量 kg./100 件
轻型 L	6	315	32.5	1/8″	6	8	14	14	12 × 1.5	14	TN 126GG - 6 LR	1.5	TN 126A GG - 6 LR	2.5
	8		41.5	1/4″	8	12	19	19	14 × 1.5	17	TN 126GG - 8 LR	2.5	TN 126A GG - 8 LR	4.3
	10		39.5	1/4″	10	12	19	19	16 × 1.5	19	TN 126GG - 10 LR	2.7	TN 126A GG - 10 LR	4.8
	12		46	3/8″	12	12	22	22	18 × 1.5	22	TN 126GG - 12 LR	3.7	TN 126A GG - 12 LR	6.4
	15		46	1/2″	15	14	27	27	22 × 1.5	27	TN 126GG - 15 LR	7.2	TN 126A GG - 15 LR	11.5
	18		45.5	1/2″	18	14	27	27	26 × 1.5	32	TN 126GG - 18 LR	7.5	TN 126A GG - 18 LR	13.8
	22	160	48.5	3/4″	22	16	32	32	30 × 2	36	TN 126GG - 22 LR	9.0	TN 126A GG - 22 LR	17.5
	28		53	1″	28	18	41	40	36 × 2	41	TN 126GG - 28 LR	15.7	TN 126A GG - 28 LR	24.8
	35		62.5	1″ 1/4	35	20	50	50	45 × 2	50	TN 126GG - 35 LR	26.2	TN 126A GG - 35 LR	40.7
	42		68.5	1″ 1/2	42	22	55	55	52 × 2	60	TN 126GG - 42 LR	29.3	TN 126A GG - 42 LR	46.3
重型 S	6	630	39	1/4″	6	12	19	19	14 × 1.5	17	TN 126GG - 6 SR	3.5	TN 126A GG - 6 SR	5.0
	8		41.5	1/4″	8	12	19	19	16 × 1.5	19	TN 126GG - 8 SR	3.7	TN 126A GG - 8 SR	5.5
	10		44.5	3/8″	10	12	22	22	18 × 1.5	22	TN 126GG - 10 SR	4.9	TN 126A GG - 10 SR	8.2
	12		46	3/8″	12	12	22	22	20 × 1.5	24	TN 126GG - 12 SR	5.6	TN 126A GG - 12 SR	9.5
	14		51	1/2″	14	14	27	27	22 × 1.5	27	TN 126GG - 14 SR	9.0	TN 126A GG - 14 SR	14.5
	16	400	50.5	1/2″	16	14	27	27	24 × 1.5	30	TN 126GG - 16 SR	9.4	TN 126A GG - 16 SR	15.8
	20		59	3/4″	20	16	32	32	30 × 2	36	TN 126GG - 20 SR	15.0	TN 126A GG - 20 SR	25.3
	25		66	1″	25	18	41	40	36 × 2	46	TN 126GG - 25 SR	26.0	TN 126A GG - 25 SR	46.5
	30		71	1″ 1/4	30	20	50	50	42 × 2	50	TN 126GG - 30 SR	41.4	TN 126A GG - 30 SR	64.5
	38	315	82	1″ 1/2	38	22	55	55	52 × 2	60	TN 126GG - 38 SR	56.0	TN 126A GG - 38 SR	89.0

SPECIAL FITTINGS 特殊规格

轻型 L	12	315	46	1/4″	12	12	19	19	18 × 1.5	22	TN 126GG - 12 LR 1/4"	3.5	TN 126A GG - 12 LR 1/4"	6.2
	12		48.5	1/2″	12	14	27	27	18 × 1.5	22	TN 126GG - 12 LR 1/2"	5.5	TN 126A GG - 12 LR 1/2"	8.2
	15		43.5	3/8″	15	12	22	22	22 × 1.5	27	TN 126GG - 15 LR 3/8"	7.2	TN 126A GG - 15 LR 3/8"	11.5
重型 S	12	630	49.5	1/2″	12	14	27	27	20 × 1.5	24	TN 126GG - 12 SR 1/2"	9.7	TN 126A GG - 12 SR 1/2"	13.6

Temperature range without pressure reductions with connections fitted with seals in NBR (standard) and FPM (to order):
NBR (Perbunan): from -35 to +100℃ - FPM (Viton): from -25 to +120℃
适合带橡胶垫的零件工作温度范围：NBR 丁晴橡胶 -35 至 +100℃，PM (Viton)：氟橡胶 -25 至 +120℃

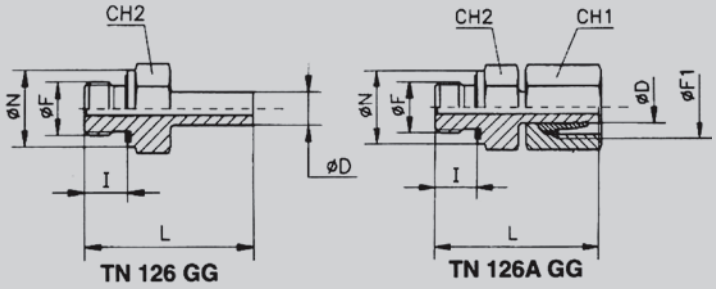

未预装卡套　　已预装卡套

TN 126 GG-M - TN 126A GG-M

Stud /Standpipe Adaptors Packing ring
可调向接头
可连接螺纹形式：公制圆柱螺纹
密封形式：DIN 3852第十一部分的
带弹性密封体结构

系列	Ø 钢管外径 d_1	公称压力 PN	尺寸 L	Ø F	Ø D	I	CH2	ØN	Ø F1	CH1	订货型号	重量 kg./100 件	订货型号	重量 kg./100 件
轻型 L	6	315	32.5	10 × 1	6	8	14	14	12 × 1.5	14	TN 126GG - 6 LM	1.5	TN 126A GG - 6 LM	2.5
	8		38.5	12 × 1.5	8	12	17	17	14 × 1.5	17	TN 126GG - 8 LM	2.5	TN 126A GG - 8 LM	3.9
	10		39	14 × 1.5	10	12	19	19	16 × 1.5	19	TN 126GG - 10 LM	2.7	TN 126A GG - 10 LM	4.9
	12		42.5	16 × 1.5	12	12	22	22	18 × 1.5	22	TN 126GG - 12 LM	3.7	TN 126A GG - 12 LM	6.4
	15		43.5	18 × 1.5	15	12	24	24	22 × 1.5	27	TN 126GG - 15 LM	7.2	TN 126A GG - 15 LM	9.8
	18		45.5	22 × 1.5	18	14	27	27	26 × 1.5	32	TN 126GG - 18 LM	7.5	TN 126A GG - 18 LM	13.0
	22	160	48.5	26 × 1.5	22	16	32	32	30 × 2	36	TN 126GG - 22 LM	9.0	TN 126A GG - 22 LM	17.5
	28		53.5	33 × 2	28	18	41	40	36 × 2	41	TN 126GG - 28 LM	15.7	TN 126AGG - 28 LM	24.8
	35		62.5	42 × 2	35	20	50	50	45 × 2	50	TN 126GG - 35 LM	26.2	TN 126A GG - 35 LM	40.7
	42		68.5	48 × 2	42	22	55	55	52 × 2	60	TN 126GG - 42 LM	29.3	TN 126A GG - 42 LM	46.0
重型 S	6	630	39	12 × 1.5	6	12	17	17	14 × 1.5	17	TN 126GG - 6 SM	3.5	TN 126A GG - 6 SM	4.6
	8		41.5	14 × 1.5	8	12	19	19	16 × 1.5	19	TN 126GG - 8 SM	3.7	TN 126A GG - 8 SM	5.5
	10		44	16 × 1.5	10	12	22	22	18 × 1.5	22	TN 126GG - 10 SM	4.9	TN 126A GG - 10 SM	8.2
	12		46	18 × 1.5	12	12	24	24	20 × 1.5	24	TN 126GG - 12 SM	5.6	TN 126A GG - 12 SM	10.4
	14		50.5	20 × 1.5	14	14	27	26	22 × 1.5	27	TN 126GG - 14 SM	9.0	TN 126A GG - 14 SM	14.5
	16	400	51	22 × 1.5	16	14	27	27	24 × 1.5	30	TN 126GG - 16 SM	9.4	TN 126A GG - 16 SM	15.8
	20		59	27 × 2	20	16	32	32	30 × 2	36	TN 126GG - 20 SM	15.0	TN 126A GG - 20 SM	25.3
	25		66	33 × 2	25	18	41	40	36 × 2	46	TN 126GG - 25 SM	26.0	TN 126A GG - 25 SM	46.5
	30		71	42 × 2	30	20	50	50	42 × 2	50	TN 126GG - 30 SM	41.4	TN 126A GG - 30 SM	64.5
	38	315	82	48 × 2	38	22	55	55	52 × 2	60	TN 126GG - 38 SM	56.0	TN 126A GG - 38 SM	89.0

Temperature range without pressure reductions with connections fitted with seals in NBR (standard) and FPM (to order): NBR (Perbunan): from -35 to +100℃ - FPM (Viton): from -25 to +120℃

适合带橡胶垫的零件工作温度范围：NBR 丁晴橡胶 -35° 至 +100℃，PM (Viton): 氟橡胶 -25 至 +120℃

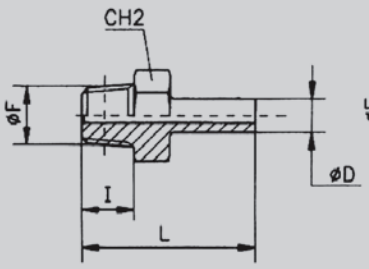

TN 126

未预装卡套

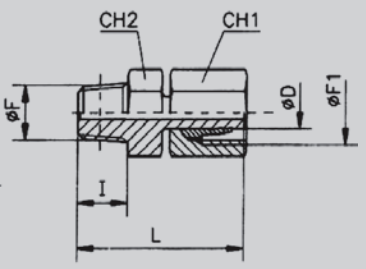

TN 126 A

已预装卡套

TN 126 NPT - TN 126A NPT

Stud / Standpipe Adaptors

可调向直通接头

可连接螺纹形式：美制锥螺纹

系列	Ø 钢管外径 d_1	公称压力 PN	尺寸							订货型号	重量 kg./100 件	订货型号	重量 kg./100 件
			L	Ø F	Ø D	I	CH2	Ø F1	CH1				
轻型 L	6	315	33	1/8″	6	10	11	12 × 1.5	14	TN 126 - 6 LNPT	1.5	TN 126A - 6 LNPT	2.4
	8		39	1/4″	8	15	14	14 × 1.5	17	TN 126 - 8 LNPT	2.5	TN 126A - 8 LNPT	4.4
	10		40	1/4″	10	15	14	16 × 1.5	19	TN 126 - 10 LNPT	2.7	TN 126A - 10 LNPT	4.7
	12		44.5	3/8″	12	15	19	18 × 1.5	22	TN 126 - 12 LNPT	3.7	TN 126A - 12 LNPT	6.9
	15		48	1/2″	15	20	22	22 × 1.5	27	TN 126 - 15 LNPT	7.2	TN 126A - 15 LNPT	10.6
	18		49	1/2″	18	20	22	26 × 1.5	32	TN 126 - 18 LNPT	7.5	TN 126A - 18 LNPT	14.5
	22	160	49	3/4″	22	20	27	30 × 2	36	TN 126 - 22 LNPT	9.0	TN 126A - 22 LNPT	17.9
	28		55.5	1″	28	25	36	36 × 2	41	TN 126 - 28 LNPT	15.7	TN 126A - 28 LNPT	26.0
	35		63	1″ 1/4	35	26	46	45 × 2	50	TN 126 - 35 LNPT	26.2	TN 126A - 35 LNPT	41.7
	42		65	1″ 1/2	42	26	50	52 × 2	60	TN 126 - 42 LNPT	29.3	TN 126A - 42 LNPT	46.1
重型 S	6	630	40	1/4″	6	15	14	14 × 1.5	17	TN 126 - 6 SNPT	3.5	TN 126A - 6 SNPT	5.2
	8		40	1/4″	8	15	14	16 × 1.5	19	TN 126 - 8 SNPT	3.7	TN 126A - 8 SNPT	5.4
	10		44	3/8″	10	15	19	18 × 1.5	22	TN 126 - 10 SNPT	4.9	TN 126A - 10 SNPT	8.4
	12		44.5	3/8″	12	15	19	20 × 1.5	24	TN 126 - 12 SNPT	5.6	TN 126A - 12 SNPT	9.2
	14		53.5	1/2″	14	20	22	22 × 1.5	27	TN 126 - 14 SNPT	9.0	TN 126A - 14 SNPT	15.5
	16	400	53.5	1/2″	16	20	22	24 × 1.5	30	TN 126 - 16 SNPT	9.4	TN 126A - 16 SNPT	16.8
	20		58	3/4″	20	20	27	30 × 2	36	TN 126 - 20 SNPT	15.0	TN 126A - 20 SNPT	25.1
	25		68.5	1″	25	25	36	36 × 2	46	TN 126 - 25 SNPT	26.0	TN 126A - 25 SNPT	47.7
	30		73.5	1″ 1/4	30	26	46	42 × 2	50	TN 126 - 30 SNPT	41.4	TN 126A - 30 SNPT	66.0
	38	315	78	1″ 1/2	38	26	50	52 × 2	60	TN 126 - 38 SNPT	56.0	TN 126A - 38 SNPT	88.0

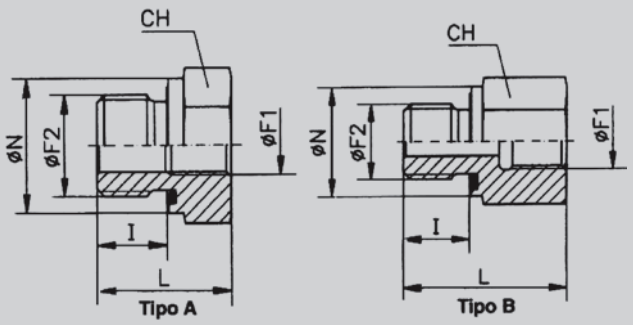

TN 141 GG-R

Male / Female Stud Adaptors Packing ring
变径补芯带ED圈接头
可连接螺纹形式：英制圆柱螺纹
密封形式：DIN 3852第十一部分的带弹性密封体结构

类型	尺寸						公称压力 PN		订货型号	重量 kg./100 件
	Ø F2	Ø F1	L	I	CH	Ø N				
A	3/8″	1/8″	22.5	12	22	22	630		TN 141 GG - 3/8” x 1/8” R	4.0
	1/2″	1/8″	24	14	27	27			TN 141 GG - 1/2” x 1/8” R	6.7
	1/2″	1/4″	24	14	27	27			TN 141 GG - 1/2” x 1/4” R	5.7
	3/4″	1/4″	26	16	32	32	400		TN 141 GG - 3/4” x 1/4” R	10.4
	3/4″	3/8″	26	16	32	32			TN 141 GG - 3/4” x 3/8” R	8.8
	1″	1/4″	29	18	41	40			TN 141 GG - 1” x 1/4” R	19.6
	1″	3/8″	29	18	41	40			TN 141 GG - 1” x 3/8” R	18.0
	1″	1/2″	29	18	41	40			TN 141 GG - 1” x 1/2” R	15.8
	1″ 1/4	1/2″	32	20	50	50			TN 141 GG - 1” 1/4 x 1/2” R	31.0
	1″ 1/4	3/4″	32	20	50	50			TN 141 GG - 1” 1/4 x 3/4” R	27.0
	1″ 1/2	1/2″	36	22	55	55	315		TN 141 GG - 1” 1/2 x 1/2” R	47.0
	1″ 1/2	3/4″	36	22	55	55			TN 141 GG - 1” 1/2 x 3/4” R	40.0
	1″ 1/2	1″	36	22	55	55			TN 141 GG - 1” 1/2 x 1” R	34.0
B	1/8″	1/4″	31	8	19	14	630		TN 141 GG - 1/8” x 1/4” R	3.7
	1/8″	3/8″	32	8	24	14			TN 141 GG - 1/8” x 3/8” R	6.2
	1/4″	1/8″	29	12	19	19			TN 141 GG - 1/4” x 1/8” R	3.7
	1/4″	3/8″	36	12	24	19			TN 141 GG - 1/4” x 3/8” R	6.7
	1/4″	1/2″	40	12	30	19			TN 141 GG - 1/4” x 1/2” R	11.5
	1/4″	3/4″	43	12	36	19			TN 141 GG - 1/4” x 3/4” R	17.0
	3/8″	1/4″	36	12	22	22			TN 141 GG - 3/8” x 1/4” R	6.7
	3/8″	1/2″	41	12	30	22			TN 141 GG - 3/8” x 1/2” R	12.5
	3/8″	3/4″	44	12	36	22	400		TN 141 GG - 3/8” x 3/4” R	18.0
	1/2″	3/8″	37	14	27	27	630		TN 141 GG - 1/2” x 3/8” R	9.0
	1/2″	3/4″	46	14	36	27	400		TN 141 GG - 1/2” x 3/4” R	18.2
	1/2″	1″	49	14	41	27			TN 141 GG - 1/2” x 1” R	22.0
	1/2″	1″ 1/4	53	14	55	27			TN 141 GG - 1/2” x 1” 1/4 R	48.0
	3/4″	1/2″	43	16	32	32			TN 141 GG - 3/4” x 1/2” R	14.5
	3/4″	1″	51	16	41	32			TN 141 GG - 3/4” x 1” R	23.7
	3/4″	1″ 1/4	55	16	55	32			TN 141 GG - 3/4” x 1” 1/4 R	48.0
	3/4″	1″ 1/2	57	16	60	32	315		TN 141 GG - 3/4” x 1” 1/2 R	56.0
	1″	3/4″	49	18	41	40	400		TN 141 GG - 1” x 3/4” R	27.0
	1″	1″ 1/4	57	18	55	40			TN 141 GG - 1” x 1” 1/4 R	50.0
	1″	1″ 1/2	59	18	60	40	315		TN 141 GG - 1” x 1” 1/2 R	58.5
	1″ 1/4	1″	53	20	50	50	400		TN 141 GG - 1” 1/4 x 1” R	45.9
	1″ 1/4	1″ 1/2	60	20	60	50	315		TN 141 GG - 1” 1/4 x 1” 1/2 R	61.5
	1″ 1/2	1″ 1/4	58	22	55	55			TN 141 GG - 1” 1/2 x 1” 1/4 R	54.0

Temperature range without pressure reductions with connections fitted with seals in NBR (standard) and FPM (to order): NBR (Perbunan): from -35 to +100° C - FPM (Viton): from -25 to +120℃

适合带橡胶垫的零件工作温度范围：NBR 丁晴橡胶 -35° 至 +100℃，PM (Viton): 氟橡胶 -25 t 至 +120℃

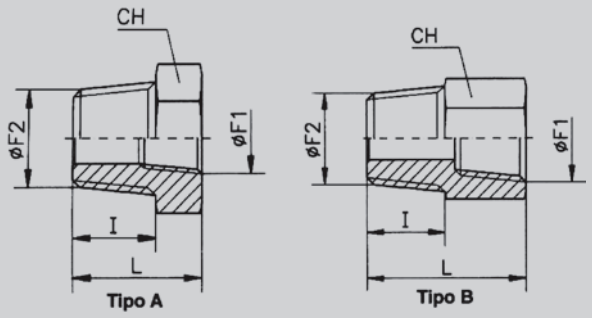

TN 143 R

Male / Female Stud Adaptors
变径补芯接头
可连接螺纹形式：B.S.P.锥螺纹

类型	尺寸						订货型号	重量 kg./100 件
	Ø F2	Ø F1	L	I	CH			
A	3/8″	1/8″	20	12	22		TN 143 - 3/8” x 1/8” R	4.4
	1/2″	1/8″	22	14	27		TN 143 - 1/2” x 1/8” R	7.0
	1/2″	1/4″	22	14	27		TN 143 - 1/2” x 1/4” R	6.4
	3/4″	1/4″	25	16	32		TN 143 - 3/4” x 1/4” R	9.9
	3/4″	3/8″	25	16	32		TN 143 - 3/4” x 3/8” R	9.5
	1″	1/4″	28	18	41		TN 143 - 1” x 1/4” R	20.7
	1″	3/8″	28	18	41		TN 143 - 1” x 3/8” R	18.7
	1″	1/2″	28	18	41		TN 143 - 1” x 1/2” R	16.6
	1″ 1/4	1/2″	32	20	50		TN 143 - 1” 1/4 x 1/2” R	31.7
	1″ 1/4	3/4″	32	20	50		TN 143 - 1” 1/4 x 3/4” R	27.7
	1″ 1/2	1/2″	37	22	55		TN 143 - 1” 1/2 x 1/2” R	48.0
	1″ 1/2	3/4″	37	22	55		TN 143 - 1” 1/2 x 3/4” R	43.9
	1″ 1/2	1″	37	22	55		TN 143 - 1” 1/2 x 1” R	34.3
B	1/8″	1/4″	26	8	19		TN 143 - 1/8” x 1/4” R	4.0
	1/8″	3/8″	26	8	24		TN 143 - 1/8” x 3/8” R	5.0
	1/4″	1/8″	29	14	19		TN 143 - 1/4” x 1/8” R	4.1
	1/4″	3/8″	34	14	24		TN 143 - 1/4” x 3/8” R	7.1
	1/4″	1/2″	40	14	32		TN 143 - 1/4” x 1/2” R	9.6
	1/4″	3/4″	40	14	36		TN 143 - 1/4” x 3/4” R	17.9
	3/8″	1/4″	32	14	22		TN 143 - 3/8” x 1/4” R	3.7
	3/8″	1/2″	38	14	32		TN 143 - 3/8” x 1/2” R	9.7
	3/8″	3/4″	38	14	36		TN 143 - 3/8” x 3/4” R	18.2
	1/2″	3/8″	36	16	27		TN 143 - 1/2” x 3/8” R	10.1
	1/2″	3/4″	43	16	36		TN 143 - 1/2” x 3/4” R	18.5
	1/2″	1″	50	16	46		TN 143 - 1/2” x 1” R	23.1
	1/2″	1″ 1/4	50	16	55		TN 143 - 1/2” x 1” 1/4 R	47.8
	3/4″	1/2″	43	18	32		TN 143 - 3/4” x 1/2” R	15.4
	3/4″	1″	50	18	46		TN 143 - 3/4” x 1” R	24.1
	3/4″	1″ 1/4	50	18	55		TN 143 - 3/4” x 1” 1/4 R	49.0
	3/4″	1″ 1/2	50	18	60		TN 143 - 3/4” x 1” 1/2 R	55.5
	1″	3/4″	48	20	41		TN 143 - 1” x 3/4” R	28.7
	1″	1″ 1/4	54	20	55		TN 143 - 1” x 1” 1/4 R	53.7
	1″	1″ 1/2	54	20	60		TN 143 - 1” x 1” 1/2 R	57.5
	1″ 1/4	1″	52	22	50		TN 143 - 1” 1/4 x 1” R	45.3
	1″ 1/4	1″ 1/2	57	22	60		TN 143 - 1” 1/4 x 1” 1/2 R	59.0
	1″ 1/2	1″ 1/4	57	24	55		TN 143 - 1” 1/2 x 1” 1/4 R	54.0

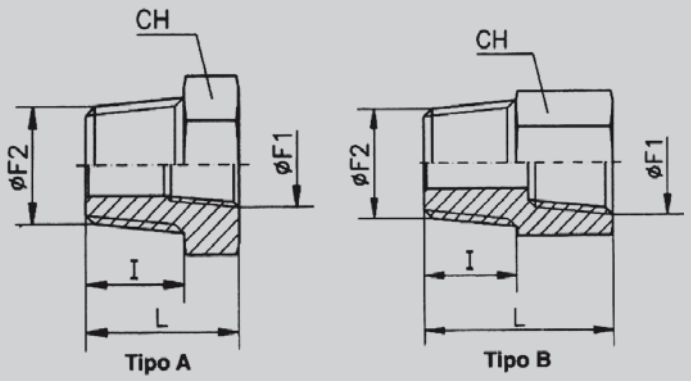

TN 143 NPT

Male / Female Stud Adaptors
变径补芯接头
可连接螺纹形式：美制锥螺纹

类型	尺寸						订货型号	重量 kg./100 件
	Ø F2	Ø F1	L	I	CH			
A	3/8″	1/8″	23	15	22		TN 143 - 3/8” x 1/8” NPT	4.4
	1/2″	1/8″	28	20	27		TN 143 - 1/2” x 1/8” NPT	7.0
	1/2″	1/4″	28	20	27		TN 143 - 1/2” x 1/4” NPT	6.4
	3/4″	1/4″	29	20	32		TN 143 - 3/4” x 1/4” NPT	9.9
	3/4″	3/8″	29	20	32		TN 143 - 3/4” x 3/8” NPT	9.5
	1″	1/4″	35	25	41		TN 143 - 1” x 1/4” NPT	20.7
	1″	3/8″	35	25	41		TN 143 - 1” x 3/8” NPT	18.7
	1″	1/2″	35	25	41		TN 143 - 1” x 1/2” NPT	16.6
	1″ 1/4	1/2″	37	25	50		TN 143 - 1” 1/4 x 1/2” NPT	31.7
	1″ 1/4	3/4″	37	25	50		TN 143 - 1” 1/4 x 3/4” NPT	27.7
	1″ 1/2	1/2″	41	26	55		TN 143 - 1” 1/2 x 1/2” NPT	48.0
	1″ 1/2	3/4″	41	26	55		TN 143 - 1” 1/2 x 3/4” NPT	43.9
	1″ 1/2	1″	41	26	55		TN 143 - 1” 1/2 x 1” NPT	34.3
B	1/8″	1/4″	29	8	19		TN 143 - 1/8” x 1/4” NPT	4.0
	1/8″	3/8″	31	8	24		TN 143 - 1/8” x 3/8” NPT	5.0
	1/4″	1/8″	29	14	19		TN 143 - 1/4” x 1/8” NPT	4.1
	1/4″	3/8″	39	14	24		TN 143 - 1/4” x 3/8” NPT	7.1
	1/4″	1/2″	46	14	32		TN 143 - 1/4” x 1/2” NPT	9.6
	1/4″	3/4″	46	14	36		TN 143 - 1/4” x 3/4” NPT	17.9
	3/8″	1/4″	36	15	22		TN 143 - 3/8” x 1/4” NPT	3.7
	3/8″	1/2″	47	15	32		TN 143 - 3/8” x 1/2” NPT	9.7
	3/8″	3/4″	47	15	36		TN 143 - 3/8” x 3/4” NPT	18.2
	1/2″	3/8″	43	20	27		TN 143 - 1/2” x 3/8” NPT	10.1
	1/2″	3/4″	53	20	36		TN 143 - 1/2” x 3/4” NPT	18.5
	1/2″	1″	60	20	46		TN 143 - 1/2” x 1” NPT	23.1
	1/2″	1″ 1/4	60	20	55		TN 143 - 1/2” x 1” 1/4 NPT	47.8
	3/4″	1/2″	53	20	32		TN 143 - 3/4” x 1/2” NPT	15.4
	3/4″	1″	60	20	46		TN 143 - 3/4” x 1” NPT	24.1
	3/4″	1″ 1/4	60	20	55		TN 143 - 3/4” x 1” 1/4 NPT	49.0
	3/4″	1″ 1/2	60	20	60		TN 143 - 3/4” x 1” 1/2 NPT	55.5
	1″	3/4″	58	25	41		TN 143 - 1” x 3/4” NPT	28.7
	1″	1″ 1/4	65	25	55		TN 143 - 1” x 1” 1/4 NPT	53.7
	1″	1″ 1/2	65	25	60		TN 143 - 1” x 1” 1/2 NPT	57.5
	1″ 1/4	1″	65	25	50		TN 143 - 1” 1/4 x 1” NPT	45.3
	1″ 1/4	1″ 1/2	65	25	60		TN 143 - 1” 1/4 x 1” 1/2 NPT	59.0
	1″ 1/2	1″ 1/4	66	26	55		TN 143 - 1” 1/2 x 1” 1/4 NPT	54.0

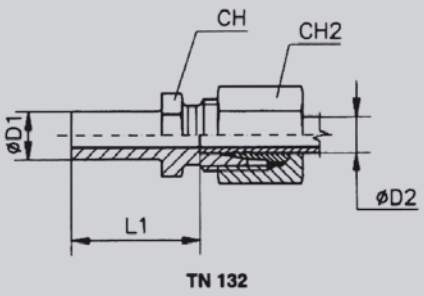

未预装卡套

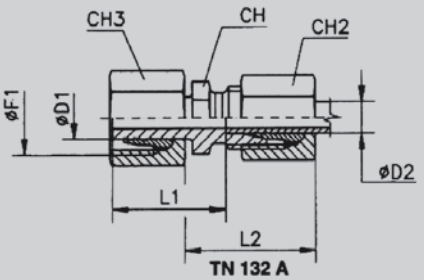

已预装卡套

TN 132 L

Standpipe/Tube Reducers
对接式变径直通接头

系列	Ø 钢管外径 D1	Ø 钢管外径 D2	公称压力 PN	尺寸 L1	L2	CH2	CH3	Ø F1	CH	订货型号	重量 kg./100 件	订货型号	重量 kg./100 件
轻型 L	8	6	315	29.5	30	14	17	14 x 1.5	14	TN 132 - 8/ 6 L	2.7	TN 132 A - 8/ 6 L	4.1
	10	6		29.5	30	14	19	16 x 1.5	14	TN 132 - 10/ 6 L	2.5	TN 132 A - 10/ 6 L	4.8
	10	8		29.5	30	17	19	16 x 1.5	17	TN 132 - 10/ 8 L	3.0	TN 132 A - 10/ 8 L	5.3
	12	6		29.5	30	14	22	18 x 1.5	14	TN 132 - 12/ 6 L	3.3	TN 132 A - 12/ 6 L	6.0
	12	8		29.5	30	17	22	18 x 1.5	17	TN 132 - 12/ 8 L	3.7	TN 132 A - 12/ 8 L	6.4
	12	10		31	31	19	22	18 x 1.5	17	TN 132 - 12/ 10 L	4.3	TN 132 A - 12/ 10 L	7.0
	15	6		29.5	29	14	27	22 x 1.5	17	TN 132 - 15/ 6 L	4.0	TN 132 A - 15/ 6 L	8.3
	15	8		29.5	29	17	27	22 x 1.5	17	TN 132 - 15/ 8 L	4.8	TN 132 A - 15/ 8 L	9.1
	15	10		31	30	19	27	22 x 1.5	17	TN 132 - 15/ 10 L	5.2	TN 132 A - 15/ 10 L	9.5
	15	12		31	30	22	27	22 x 1.5	19	TN 132 - 15/ 12 L	5.9	TN 132 A - 15/ 12 L	10.2
	18	6		30.5	29	14	32	26 x 1.5	19	TN 132 - 18/ 6 L	4.7	TN 132 A - 18/ 6 L	11.0
	18	8		30.5	29	17	32	26 x 1.5	19	TN 132 - 18/ 8 L	5.0	TN 132 A - 18/ 8 L	11.3
	18	10		32	30	19	32	26 x 1.5	19	TN 132 - 18/ 10 L	5.7	TN 132 A - 18/ 10 L	12.0
	18	12		32	30	22	32	26 x 1.5	19	TM 132 - 18/ 12 L	6.4	TN 132 A - 18/ 12 L	12.7
	18	15		32.5	32	27	32	26 x 1.5	24	TN 132 - 18/ 15 L	8.8	TN 132 A - 18/ 15 L	15.1
	22	6	160	33.5	32	14	36	30 x 2	24	TN 132 - 22/ 6 L	5.8	TN 132 A - 22/ 6 L	14.3
	22	8		33.5	32	17	36	30 x 2	24	TN 132 - 22/ 8 L	6.6	TN 132 A - 22/ 8 L	15.1
	22	10		35	33	19	36	30 x 2	24	TN 132 - 22/ 10 L	6.8	TN 132 A - 22/ 10 L	15.3
	22	12		35	33	22	36	30 x 2	24	TN 132 - 22/ 12 L	7.7	TN 132 A - 22/ 12 L	16.2
	22	15		35.5	35	27	36	30 x 2	24	TN 132 - 22/ 15 L	9.7	TN 132 A - 22/ 15 L	18.2
	22	18		35	35	32	36	30 x 2	27	TN 132 - 22/ 18 L	11.5	TN 132 A - 22/ 18 L	20.0
	28	6		34.5	33	14	41	36 x 2	32	TN 132 - 28/ 6 L	9.6	TN 132 A - 28/ 6 L	18.7
	28	8		34.5	33	17	41	36 x 2	32	TN 132 - 28/ 8 L	10.4	TN 132 A - 28/ 8 L	19.5
	28	10		36	34	19	41	36 x 2	32	TN 132 - 28/ 10 L	11.1	TN 132 A - 28/ 10 L	20.2
	28	12		36	34	22	41	36 x 2	32	TN 132 - 28/ 12 L	11.6	TN 132 A - 28/ 12 L	20.7
	28	15		36.5	35	27	41	36 x 2	32	TN 132 - 28/ 15 L	13.6	TN 132 A - 28/ 15 L	22.7
	28	18		36	36	32	41	36 x 2	32	TN 132 - 28/ 18 L	15.6	TN 132 A - 28/ 18 L	24.7
	28	22		36	38	36	41	36 x 2	32	TN 132 - 28/ 22 L	17.9	TN 132 A - 28/ 22 L	27.0
	35	6		40.5	34	14	50	45 x 2	36	TN 132 - 35/ 6 L	16.5	TN 132 A - 35/ 6 L	31.0
	35	8		40.5	34	17	50	45 x 2	36	TN 132 - 35/ 8 L	16.9	TN 132 A - 35/ 8 L	31.4
	35	10		42	35	19	50	45 x 2	36	TN 132 - 35/ 10 L	17.7	TN 132 A - 35/ 10 L	32.2
	35	12		42	35	22	50	45 x 2	36	TN 132 - 35/ 12 L	17.7	TN 132 A - 35/ 12 L	32.2
	35	15		42.5	36	27	50	45 x 2	36	TN 132 - 35/ 15 L	20.5	TN 132 A - 35/ 15 L	35.0
	35	18		42	37	32	50	45 x 2	36	TN 132 - 35/ 18 L	21.9	TN 132 A - 35/ 18 L	36.4
	35	22		44	39	36	50	45 x 2	36	TN 132 - 35/ 22 L	23.5	TN 132 A - 35/ 22 L	38.0
	35	28		44	39	41	50	45 x 2	41	TN 132 - 35/ 28 L	25.2	TN 132 A - 35/ 28 L	39.7
	42	6		42.5	35	14	60	52 x 2	46	TN 132 - 42/ 6 L	21.2	TN 132 A - 42/ 6 L	44.2
	42	8		42.5	35	17	60	52 x 2	46	TN 132 - 42/ 8 L	22.2	TN 132 A - 42/ 8 L	45.2
	42	10		44	36	19	60	52 x 2	46	TN 132 - 42/ 10 L	22.2	TN 132 A - 42/ 10 L	45.2
	42	12		43	36	22	60	52 x 2	46	TN 132 - 42/ 12 L	23.1	TN 132 A - 42/ 12 L	46.1
	42	15		44.5	37	27	60	52 x 2	46	TN 132 - 42/ 15 L	24.2	TN 132 A - 42/ 15 L	47.2
	42	18		44	38	32	60	52 x 2	46	TN 132 - 42/ 18 L	26.1	TN 132 A - 42/ 18 L	49.1
	42	22		46	40	36	60	52 x 2	46	TN 132 - 42/ 22 L	28.2	TN 132 A - 42/ 22 L	51.2
	42	28		46	40	41	60	52 x 2	46	TN 132 - 42/ 28 L	30.2	TN 132 A - 42/ 28 L	53.2
	42	35		45	44	50	60	52 x 2	46	TN 132 - 42/ 35 L	35.5	TN 132 A - 42/ 35 L	58.5

Overall sizes are with closed fitting. 总长为预安装后的长度。

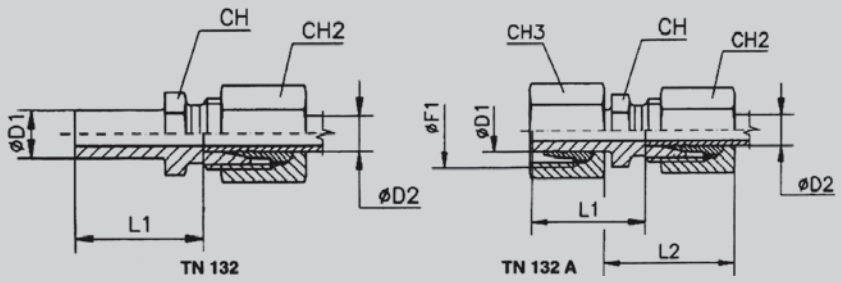

未预装卡套　　已预装卡套

TN 132 S

Standpipe/Tube Reducers

对接式变径直通接头

系列	Ø 钢管外径 D1	Ø 钢管外径 D2	公称压力 PN	尺寸 L1	L2	CH2	CH3	Ø F1	CH	订货型号	重量 kg./100 件	订货型号	重量 kg./100 件
重型 S	8	6	630	31	31	17	19	16 x 1.5	17	TN 132 - 8/ 6 S	4.8	TN 132 A - 8/ 6 S	6.6
	10	6		32	31	17	22	18 x 1.5	17	TN 132 - 10/ 6 S	3.8	TN 132 A - 10/ 6 S	7.1
	10	8		32	31	19	22	18 x 1.5	17	TN 132 - 10/ 8 S	4.4	TN 132 A - 10/ 8 S	7.7
	12	6		33	32	17	24	20 x 1.5	17	TN 132 - 12/ 6 S	4.3	TN 132 A - 12/ 6 S	8.2
	12	8		33	32	19	24	20 x 1.5	17	TN 132 - 12/ 8 S	4.8	TN 132 A - 12/ 8 S	8.7
	12	10		32.5	33	22	24	20 x 1.5	19	TN 132 - 12/ 10 S	6.2	TN 132 A - 12/ 10 S	10.1
	14	6		37	34	17	27	22 x 1.5	17	TN 132 - 14/ 6 S	5.2	TN 132 A - 14/ 6 S	10.6
	14	8		37	34	19	27	22 x 1.5	17	TN 132 - 14/ 8 S	5.7	TN 132 A - 14/ 8 S	11.1
	14	10		36.5	35	22	27	22 x 1.5	19	TN 132 - 14/ 10 S	6.9	TN 132 A - 14/ 10 S	12.3
	14	12		36.5	35	24	27	22 x 1.5	22	TN 132 - 14/ 12 S	7.4	TN 132 A - 14/ 12 S	12.8
	16	6		37	34	17	30	24 x 1.5	17	TN 132 - 16/ 6 S	5.8	TN 132 A - 16/ 6 S	12.3
	16	8		37	34	19	30	24 x 1.5	17	TN 132 - 16/ 8 S	6.3	TN 132 A - 16/ 8 S	12.8
	16	10		36.5	35	22	30	24 x 1.5	19	TN 132 - 16/ 10 S	7.7	TN 132 A - 16/ 10 S	14.2
	16	12		36.5	35	24	30	24 x 1.5	22	TM 132 - 16/ 12 S	8.2	TM 132 A - 16/ 12 S	14.7
	16	14		38	38	27	30	24 x 1.5	24	TN 132 - 16/ 14 S	9.8	TN 132 A - 16/ 14 S	16.3
	20	6	400	43	36	17	36	30 x 2	22	TN 132 - 20/ 6 S	7.9	TN 132 A - 20/ 6 S	18.1
	20	8		43	36	19	36	30 x 2	22	TN 132 - 20/ 8 S	8.4	TN 132 A - 20/ 8 S	18.6
	20	10		42.5	37	22	36	30 x 2	22	TN 132 - 20/ 10 S	9.5	TN 132 A - 20/ 10 S	19.7
	20	12		42.5	37	24	36	30 x 2	22	TN 132 - 20/ 12 S	10.4	TN 132 A - 20/ 12 S	20.6
	20	14		44	40	27	36	30 x 2	24	TN 132 - 20/ 14 S	12.5	TN 132 A - 20/ 14 S	22.7
	20	16		43.5	40	30	36	30 x 2	27	TN 132 - 20/ 16 S	13.9	TN 132 A - 20/ 16 S	24.1
	25	6		47	38	17	46	36 x 2	27	TN 132 - 25/ 6 S	11.0	TN 132 A - 25/ 6 S	31.5
	25	8		47	38	19	46	36 x 2	27	TN 132 - 25/ 8 S	11.6	TN 132 A - 25/ 8 S	32.1
	25	10		46.5	39	22	46	36 x 2	27	TN 132 - 25/ 10 S	11.7	TN 132 A - 25/ 10 S	33.2
	25	12		46.5	39	24	46	36 x 2	27	TN 132 - 25/ 12 S	13.3	TN 132 A - 25/ 12 S	33.8
	25	14		48	42	27	46	36 x 2	27	TN 132 - 25/ 14 S	15.7	TN 132 A - 25/ 14 S	36.2
	25	16		47.5	42	30	46	36 x 2	27	TN 132 - 25/ 16 S	16.5	TN 132 A - 25/ 16 S	37.0
	25	20		47.5	45	36	46	36 x 2	32	TN 132 - 25/ 20 S	20.5	TN 132 A - 25/ 20 S	41.0
	30	6		49	37	17	50	42 x 2	32	TN 132 - 30/ 6 S	14.9	TN 132 A - 30/ 6 S	38.0
	30	8		49	37	19	50	42 x 2	32	TN 132 - 30/ 8 S	15.9	TN 132 A - 30/ 8 S	39.0
	30	10		48.5	38	22	50	42 x 2	32	TN 132 - 30/ 10 S	16.9	TN 132 A - 30/ 10 S	40.0
	30	12		48.5	38	24	50	42 x 2	32	TN 132 - 30/ 12 S	17.5	TN 132 A - 30/ 12 S	40.6
	30	14		50	41	27	50	42 x 2	32	TN 132 - 30/ 14 S	19.4	TN 132 A - 30/ 14 S	42.5
	30	16		49.5	41	30	50	42 x 2	32	TN 132 - 30/ 16 S	20.5	TN 132 A - 30/ 16 S	43.6
	30	20		49.5	45	36	50	42 x 2	32	TN 132 - 30/ 20 S	24.7	TN 132 A - 30/ 20 S	47.8
	30	25		50	48	46	50	42 x 2	41	TN 132 - 30/ 25 S	36.5	TN 132 A - 30/ 25 S	59.3
	38	6	315	56	38	17	60	52 x 2	41	TN 132 - 38/ 6 S	22.7	TN 132 A - 38/ 6 S	55.7
	38	8		56	38	19	60	52 x 2	41	TN 132 - 38/ 8 S	22.9	TN 132 A - 38/ 8 S	55.9
	38	10		55.5	39	22	60	52 x 2	41	TN 132 - 38/ 10 S	24.8	TN 132 A - 38/ 10 S	57.8
	38	12		56.5	39	24	60	52 x 2	41	TN 132 - 38/ 12 S	25.3	TN 132 A - 38/ 12 S	58.3
	38	14		57	42	27	60	52 x 2	41	TN 132 - 38/ 14 S	27.3	TN 132 A - 38/ 14 S	60.3
	38	16		56.5	42	30	60	52 x 2	41	TN 132 - 38/ 16 S	28.6	TN 132 A - 38/ 16 S	61.6
	38	20		56.5	46	36	60	52 x 2	41	TN 132 - 38/ 20 S	32.5	TN 132 A - 38/ 20 S	65.5
	38	25		57	49	46	60	52 x 2	41	TN 132 - 38/ 25 S	44.2	TN 132 A - 38/ 25 S	77.2
	38	30		57.5	52	50	60	52 x 2	46	TN 132 - 38/ 30 S	47.7	TN 132 A - 38/ 30 S	80.3

Overall sizes are with closed fitting.　　总长为预安装后的长度。

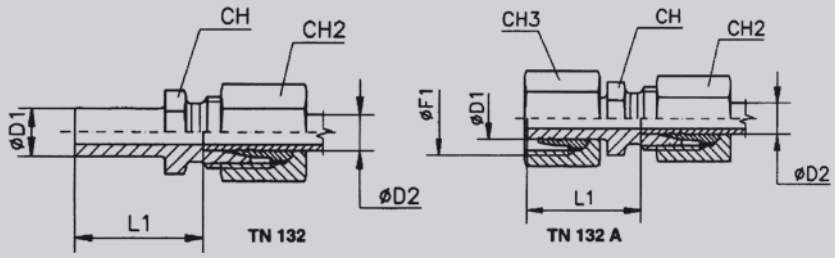

未预装卡套　　已预装卡套

SPECIAL FITTINGS
特殊规格

TN 132

Standpipe/Tube Reducers
对接式变径直通接头

系列	Ø 钢管外径 D1	Ø 钢管外径 D2	公称压力 PN	尺寸 L1		CH2	CH3	Ø F1	CH	订货型号	重量 kg./100 件	订货型号	重量 kg./100 件
超轻型 LL	6	4	100	23		10	12	10 × 1	11	TN 132 - 6LL/4 LL	1.0	TN 132 A - 6LL/4 LL	1.6
	8	4		23.5		10	14	12 × 1	11	TN 132 - 8LL/4 LL	1.2	TN 132 A - 8LL/4 LL	2.0
	8	6		22		12	14	12 × 1	11	TN 132 - 8LL/6 LL	1.3	TN 132 A - 8LL/6 LL	2.1
轻型 / 超轻型 LL/L	6	4	315	23		10	14	12 × 1.5	11	TN 132 - 6L /4 LL	1.0	TN 132 A - 6L /4 LL	2.0
	8	4		23.5		10	17	14 × 1.5	11	TN 132 - 8L /4 LL	1.4	TN 132 A - 8L /4 LL	2.6
	10	4		28.5		10	19	16 × 1.5	11	TN 132 - 10L /4 LL	1.5	TN 132 A - 10L /4 LL	3.8
	12	4		28.5		10	22	18 × 1.5	14	TN 132 - 12L /4 LL	2.7	TN 132 A - 12L /4 LL	5.4
重型 / 轻型 L/S	16	15	315	37		27	30	24 × 1.5	24	TN 132 - 16S /15 L	10.7	TN 132 A - 16S /15 L	17.2
	20	15		43		27	36	30 × 2	24	TN 132 - 20S /15 L	12.7	TN 132 A - 20S /15 L	23.0
	20	18		42.5		32	36	30 × 2	27	TN 132 - 20S /18 L	14.4	TN 132 A - 20S /18 L	24.7
	25	22	160	48.5		36	46	36 × 2	32	TN 132 - 25S /22 L	22.5	TN 132 A - 25S /22 L	43.0
	30	28		50.5		41	50	42 × 2	41	TN 132 - 30S /28 L	38.2	TN 132 A - 30S /28 L	61.3
轻型 / 重型 L/S	18	16	315	36		30	32	26 × 1.5	27	TN 132 - 18L /16 S	14.6	TN 132 A - 18L /16 S	21.0
	22	16	160	38		30	36	30 × 2	27	TN 132 - 22L /16 S	17.0	TN 132 A - 18L /16 S	25.5
	22	20		38		36	36	30 × 2	32	TN 132 - 22L /20 S	21.5	TN 132 A - 22L /20 S	30.0
	28	16		39		30	41	36 × 2	32	TN 132 - 28L /16 S	17.3	TN 132 A - 28L /16 S	26.5
	28	25		40.5		46	41	36 × 2	41	TN 132 - 28L /25 S	36.1	TN 132 A - 28L /25 S	45.3

Overall sizes are with closed fitting.
总长为预安装后的长度。

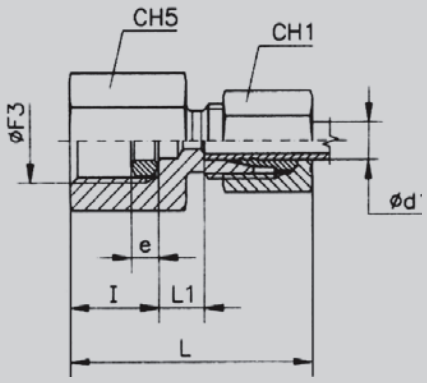

TN 103

Gauge Couplings
压力表接头
可连接螺纹形式：英制圆柱螺纹

系列	Ø 钢管外径 d_1	公称压力 PN	尺寸								订货型号	重量 kg./100 件
			Ø F3	L	L1	CH1	CH5	e*	I			
超轻型 LL	4	100	1/4"	33	8.5	10	19	4.5	14.5		TN 103 - 4 LL	3.6
轻型 L	6	315	1/4"	37	7.5	14	19	4.5	14.5		TN 103 - 6 L	4.9
	8		1/4"	37	7.5	17	19	4.5	14.5		TN 103 - 8 L	5.3
	10		1/4"	38	8.5	19	19	4.5	14.5		TN 103 - 10 L	6.0
	12		1/4"	38	8.5	22	19	4.5	14.5		TN 103 - 12 L	6.8
重型 S	6	630	1/2"	46	11	17	27	5	20		TN 103 - 6 S	10.5
	8		1/2"	46	11	19	27	5	20		TN 103 - 8 S	10.5
	10		1/2"	47	10.5	22	27	5	20		TN 103 - 10 S	12.0
	12		1/2"	47	10.5	24	27	5	20		TN 103 - 12 S	12.8

Overall sizes are with closed fitting.
总长为预安装后的长度。

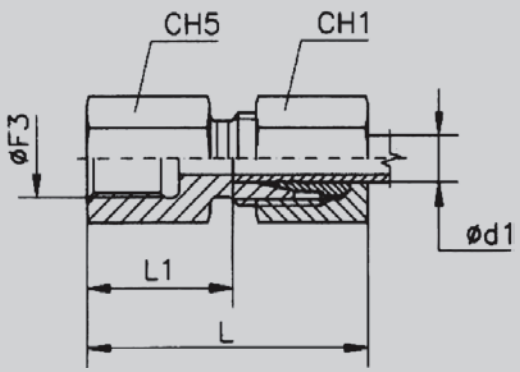

TN 147

Female Stud Couplings

内螺纹接头

可连接螺纹形式：英制圆柱螺纹
公制圆柱螺纹

系列	Ø 钢管外径 d_1	公称压力 PN	尺寸			英制圆柱螺纹			重量 kg./100 件	公制圆柱螺纹			重量 kg./100 件
			L	L1	CH1	Ø F3	CH5	订货型号		Ø F3	CH5	订货型号	
轻型 L	6	315	34	19	14	1/8″	14	TN 147 - 6 LR	3.0	10 x 1	14	TN 147 - 6 LM	3.0
	8		39	24	17	1/4″	19	TN 147 - 8 LR	5.5	12 x 1.5	17	TN 147 - 8 LM	4.7
	10		40	25	19	1/4″	19	TN 147 - 10 LR	6.0	14 x 1.5	19	TN 147 - 10 LM	6.0
	12		41	26	22	3/8″	24	TN 147 - 12 LR	9.0	16 x 1.5	22	TN 147 - 12 LM	8.0
	15		46	31	27	1/2″	27	TN 147 - 15 LR	13.0	18 x 1.5	24	TN 147 - 15 LM	11.0
	18		47	30.5	32	1/2″	27	TN 147 - 18 LR	15.0	22 x 1.5	30	TN 147 - 18 LM	17.0
	22	160	52	35.5	36	3/4″	36	TN 147 - 22 LR	25.5	26 x 1.5	32	TN 147 - 22 LM	21.0
	28		55	38	41	1″	41	TN 147 - 28 LR	30.5	33 x 2	41	TN 147 - 28 LM	30.5
	35		63	41	50	1″ 1/4	55	TN 147 - 35 LR	61.0	42 x 2	55	TN 147 - 35 LM	61.0
	42		65	42.5	60	1″ 1/2	60	TN 147 - 42 LR	75.0	48 x 2	60	TN 147 - 42 LM	75.0
重型 S	6	630	41	26	17	1/4″	19	TN 147 - 6 SR	6.0	12 x 1.5	17	TN 147 - 6 SM	5.2
	8		41	26	19	1/4″	19	TN 147 - 8 SR	6.5	14 x 1.5	19	TN 147 - 8 SM	6.2
	10		43	26.5	22	3/8″	24	TN 147 - 10 SR	10.0	16 x 1.5	22	TN 147 - 10 SM	9.0
	12		43	26.5	24	3/8″	24	TN 147 - 12 SR	10.5	18 x 1.5	24	TN 147 - 12 SM	10.5
	14		50	32	27	1/2″	30	TN 147 - 14 SR	18.0	20 x 1.5	27	TN 147 - 14 SM	15.0
	16	400	50	31.5	30	1/2″	30	TN 147 - 16 SR	19.5	22 x 1.5	30	TN 147 - 16 SM	18.5
	20		56	34.5	36	3/4″	36	TN 147 - 20 SR	30.0	27 x 2	36	TN 147 - 20 SM	30.0
	25		62	37.5	46	1″	41	TN 147 - 25 SR	46.5	33 x 2	41	TN 147 - 25 SM	46.0
	30		69	42	50	1″ 1/4	55	TN 147 - 30 SR	74.0	42 x 2	55	TN 147 - 30 SM	73.0
	38	315	74	43.5	60	1″ 1/2	60	TN 147 - 38 SR	95.5	48 x 2	60	TN 147 - 38 SM	94.0

SPECIAL FITTINGS 特殊规格

轻型 L	8	315	40	25	17	3/8"	24	TN147-8LR3/8"	7.8	-	-	-	-
	8		44	29	17	1/2"	27	TN147-8LR1/2"	9.7	-	-	-	-
	10		41	26	19	3/8"	24	TN147-10LR3/8"	8.4	-	-	-	-
	10		45	30	19	1/2"	27	TN147-10LR1/2"	10.1	-	-	-	-
	12		45	30	22	1/2"	27	TN147-12LR1/2"	10.5	-	-	-	-

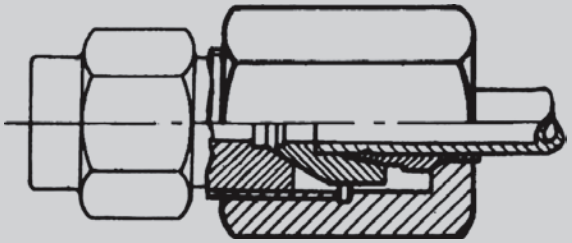

TN258

Ring fitting Diesel injection feed
柴油机喷嘴防震接头

This fitting has been designed for antivibration appliances and consequently against all causes of pipe breakage thanks to the ring shape which guides it along the section and with articulation points which facilitate assembly.

这个接头是为抗震设备专门设计，由于环形接头与衬套和螺母的切面紧密贴合，因此可以对抗各种原因造成的管损坏或破裂。

Assembly:

(1) Give the tube a right angle shape.
正确的切割管子角度

(2) Oil all parts.
润滑零件

(3) Mount bush. ring. and nut as shown on drawing.
如右图所示，安装好衬套，管环和螺母

(4) Push pipe in bush and the latter against the fitting by manually screwing nut and by feeling it well tight with the wrench.
把管子插入陈套内之后用手旋紧螺母，再用扳手拧紧

(5) Loosen and tighten before final tightening.
反复操作达到最终拧紧

Standard sizes:
标准尺寸

12 × 1.5 nut - Symbol TN 258 - 6L;
14 × 1.5 nut - Symbol TN 258 - 6S.

On request. we can supply nuts with other sizes.
特殊规格，可以订制。

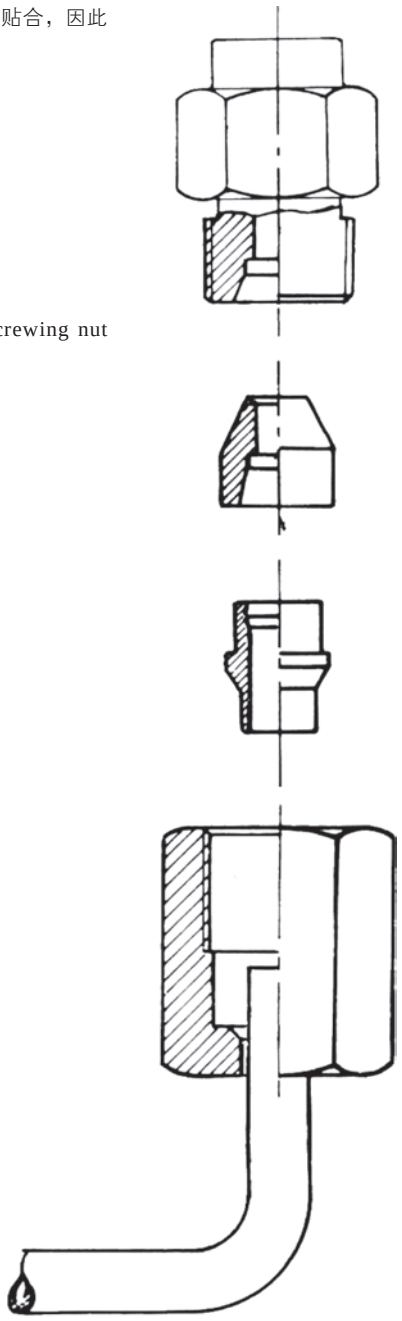

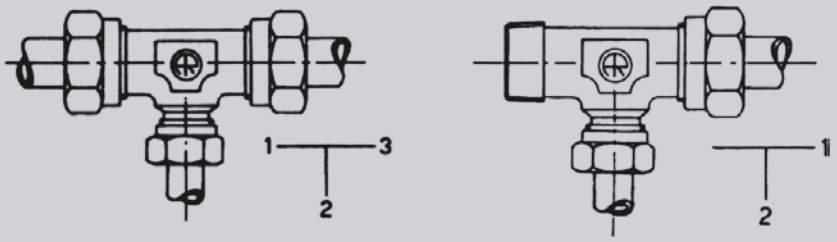

TN 128

Reduced Fittings

T型变径管接头

A) The manufacture of reduced fittings (i.e. with tube offtake reduced to the rated diameter of fitting) is possible only for the hereunder mentioned quanti-ties. which are also valid when a modification of the standard offtake connection (threaded connection or offtake end) is desired:

- fitting with standard pipe up to 12 S (12 L) minimun quantity: 500 pieces
- fitting with standard pipe up to 20 S (22 L) minimun quantity: 250 pieces
- fitting with standard pipe up to 38 S (42 L) minimun quantity: 50 pieces.

When ordering these fittings. please indicate the symbol of the standard table to which the desired form refers. by adding an "R" (reduced) and by indicating. in the order of the hereabove reported scheme. the size of the connections. for example: intermediate ring fitting TN 100 R - 20 S - 16 S - 20 S.

PRICE: net list price (or small discount to be agreed).

价格：不含折扣（特殊数量允许小折扣）

B) For quantities lower than those indicated here above. orders will be carried out by applying to the standard fitting our reducing unit TN 132. in order to obtain whatever field of reduction. on any shape of fitting. for small quantities too.

如果数量少于我们指定的最小订量，可以订购我们的标准型号 TN132 系类产品，TN132 用于任何变径领域并可于别的接头一起连接使用。

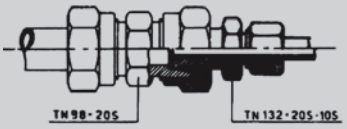

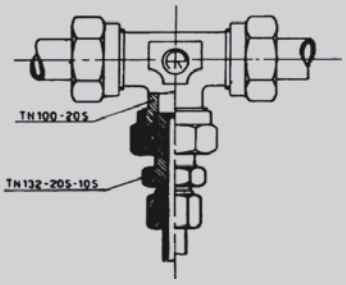

For ordering these fittings. please indicate the symbol of the standard table to which the form refers. by adding "132" (instead of "R") and by indicating in the order of the hereabove reported scheme. the size of the connections; for example: TN 100 - 132 - 20 S - 10 S - 20 S.

PRICE: price list of standard fitting + price list of relative reducing unit TN 132: the normal discount granted to the customer will be applied on the total.

C) In case the modified version of the standard offtake connection (threaded connection or offtake ends) would be desired and always for limited quantities. orders will be carried out by mounting on the standard fitting the threaded reduction fitting according to TN 141 or TN 143 - of type A or B in accordance with the reduction ratio.

For ordering these fittings please indicate the symbol of the standard table to which the form refers. by adding "141" (this is valid too for "143") and by indicating in the order of the hereabove mentioned scheme the sizes of the connection; for example: TN 94 -143 - 20 S - 1" NPT (or gas).

PRICE: Price list of the standard fitting + price list of the reducing unit TN 141 or TN 143 (type A or B): the usual discount granted to the client will be deducted from the total.

We recommend to our customers to use exclusively the standard fittings. Our clients will take advantage of our materials which are always ready for shipment. Above all. they will be in a position to avoid higher costs in their plants.

我们建议客户选择现有标准接头，充足的库存保证更快的交期，更重要的是在安装过程中可以避免更高的成本。

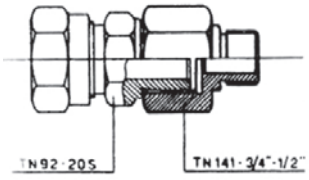

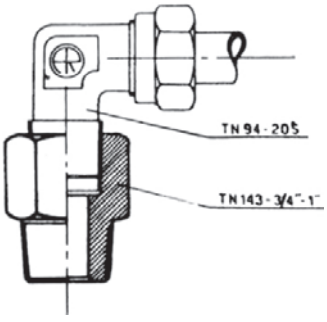

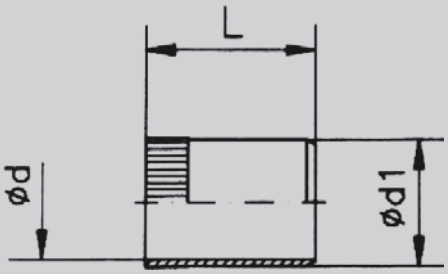

TN 80

Pipe inserts for plastic tubes
管衬

Ø 钢管外径和壁厚	Ø 钢管内径	尺寸			订货型号
		Ø d	Ø d1	L	
● 6 × 1	4	2.6	3.8	15.5	TN 80 - 6 × 1
6 × 0.5	5	3.6	4.8	12.5	TN 80 - 6 × 0.5
● 8 × 1	6	4.6	5.8	15.5	TN 80 - 8 × 1
10 × 1.5	7	5.6	6.8	17	TN 80 - 10 x 1.5
● 10 × 1	8	6.6	7.8	16.5	TN 80 - 10 × 1
12 × 1.5	9	7.6	8.8	16.5	TN 80 - 12 × 1.5
● 12 × 1	10	8.6	9.8	16.5	TN 80 - 12 × 1
● 15 × 1.5	12	10.2	11.8	17	TN 80 - 15 × 1.5
15 × 1	13	11.2	12.8	17	TN 80 - 15 × 1
● 18 × 1.5	15	13.2	14.8	17.5	TN 80 - 18 × 1.5
18 × 1	16	14.2	15.8	17.5	TN 80 - 18 × 1
● 20 × 1	18	16.2	17.8	22	TN 80 - 20 × 1
● 22 × 1.5	19	17.2	18.8	18	TN 80 - 22 × 1.5
22 × 1	20	18.2	19.8	18	TN 80 - 22 × 1
● 25 × 1.5	22	20.2	21.8	23.5	TN 80 - 25 × 1.5
28 × 2	24	22.2	23.8	18	TN 80 - 28 × 2
● 28 × 1.5	25	23.2	24.8	18	TN 80 - 28 × 1.5
● 35 × 2	31	28.8	30.8	22.5	TN 80 - 35 × 2
● 42 × 2	38	35.8	37.8	23.5	TN 80 - 42 × 2

The measurements in bold type are normally expected to be in stock 常规有库存
Mat. STAINLESS STEEL 红圈表示不锈钢材质可选

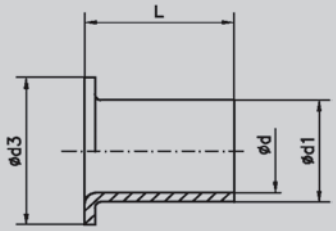

TN 80L

Pipe inserts for plastic tubes
管衬

Ø 钢管外径和壁厚	Ø 钢管内径	Ø d	Ø d1	Ø d3	L	订货型号
6 × 1	4	3.5	3.95	5.5	10	TN 80L - 6 × 1
8 × 1	6	5.4	5.9	7.5	12	TN 80L - 8 × 1
10 × 1	8	7.2	7.9	9.5	16	TN 80L - 10 × 1
12 × 1	10	9	9.8	11.5	20	TN 80L - 12 × 1

The measurements in bold type are normally expected to be in stock 常规有库存
Mat. STAINLESS STEEL 红圈表示不锈钢材质可选

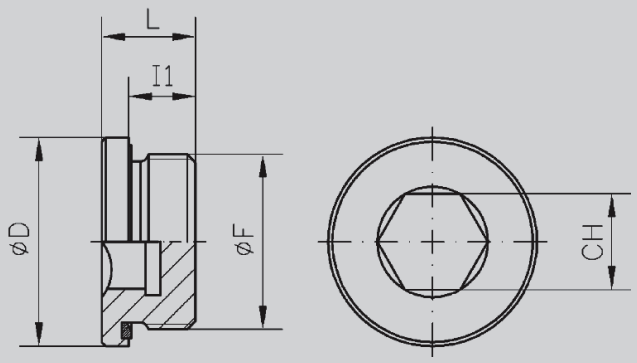

TN 185 GG

Inner hexagon plug Packing ring
内六角堵头
可连接螺纹形式：英制圆柱螺纹
公制圆柱螺纹
密封形式：DIN 3852第十一部分的
带弹性密封体结构

公制螺纹 Ø F	Ø D	尺寸			扭力 MT Nm		订货型号	公称压力 PE	重量 kg./100 件
		I1	L	CH					
10 × 1	14	8	12	5	10		TN 185 GG - 10 × 1 M	400	0.7
12 × 1.5	17	12	17	6	20		TN 185 GG - 12 × 1.5 M		1.4
14 × 1.5	19	12	17	6	30		TN 185 GG - 14 × 1.5 M		2.0
16 × 1.5	22	12	17	8	35		TN 185 GG - 16 × 1.5 M		2.5
18 × 1.5	24	12	17	8	40		TN 185 GG - 18 × 1.5 M		3.2
20 × 1.5	26	14	19	10	50		TN 185 GG - 20 × 1.5 M		4.2
22 × 1.5	27	14	19	10	60		TN 185 GG - 22 × 1.5 M		5.1
26 × 1.5	32	16	21	12	70		TN 185 GG - 26 × 1.5 M		7.8
27 × 2	32	16	21	12	90		TN 185 GG - 27 × 2 M		7.9
33 × 2	40	16	22.5	17	140		TN 185 GG - 33 × 2 M		13.0
42 × 2	50	16	22.5	22	240		TN 185 GG - 42 × 2 M	250	19.8
48 × 2	55	16	22.5	24	300		TN 185 GG - 48 × 2 M		26.3

英制螺纹 Ø F	Ø D	尺寸			扭力 MT Nm		订货型号	公称压力 PE	重量 kg./100 件
		I1	L	CH					
1/8″	14	8	12	5	10		TN 185 GG - 1/8″ R	400	0.7
1/4″	19	12	17	6	30		TN 185 GG - 1/4″ R		1.8
3/8″	22	12	17	8	35		TN 185 GG - 3/8″ R		2.7
1/2″	27	14	19	10	60		TN 185 GG - 1/2″ R		4.5
3/4″	32	16	21	12	90		TN 185 GG - 3/4″ R		7.1
1″	40	16	22.5	17	140		TN 185 GG - 1″ R		13.3
1″ 1/4	50	16	22.5	22	240		TN 185 GG - 1″ 1/4R	250	20.1
1″ 1/2	55	16	22.5	24	300		TN 185 GG - 1″ 1/2R		25.9

Temperature range without pressure reductions with connections fitted with seals in NBR (standard) and FPM (to order): NBR (Perbunan): from -35 to +100℃ - FPM (Viton): form -25 to +120℃

适合带橡胶垫的零件工作温度范围：

NBR 丁晴橡胶：-35° 至 +100℃

PM (Viton)：氟橡胶 -25 t 至 +120

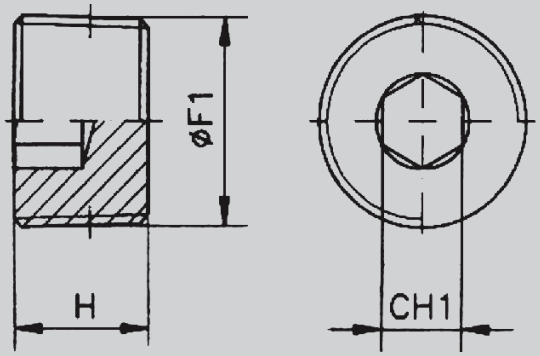

TN 192 R - TN 192 NPT

Inner hexagon plug
内六角堵头
可连接螺纹形式：B.S.P.锥螺纹
美制锥螺纹

TN 192 R

英制锥螺纹 Ø F1	尺寸		订货型号
	H	CH1	
1/8″	9.5	1/16”	TN 192 - 1/8″ R
1/4″	12.7	1/4”	TN 192 - 1/4″ R
3/8″	14.3	5/16”	TN 192 - 3/8″ R
1/2″	17.5	3/8”	TN 192 - 1/2″ R
5/8″	19	1/2”	TN 192 - 5/8″ R
3/4″	20.6	9/16”	TN 192 - 3/4″ R
1″	25.4	5/8”	TN 192 - 1″ R
1″ 1/4	31.7	3/4”	TN 192 - 1″ 1/4 R
1″ 1/2	31.7	3/4”	TN 192 - 1″ 1/2 R

TN 192 NPT

美制锥螺纹 Ø F1	尺寸		订货型号
	H	CH1	
1/16″	7.9	5/32”	TN 192 - 1/16″ NPT
1/8″	7.9	3/16”	TN 192 - 1/8″ NPT
1/4″	11.1	1/4”	TN 192 - 1/4″ NPT
3/8″	12.7	5/16”	TN 192 - 3/8″ NPT
1/2″	14.3	3/8”	TN 192 - 1/2″ NPT
3/4″	15.9	9/16”	TN 192 - 3/4″ NPT
1″	19	5/8”	TN 192 - 1″ NPT
1″ 1/4	20.6	3/4”	TN 192 - 1″ 1/4 NPT
1″ 1/2	20.6	1”	TN 192 - 1″ 1/2 NPT

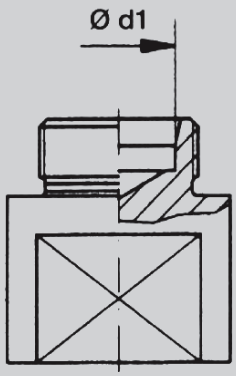

TN 195

Pre-assembly adaptor
卡套预安装接头

系列	Ø 钢管外径 d_1	订货型号
超轻型 LL	4	TN 195 - 4 LL
	5	TN 195 - 5 LL
	6	TN 195 - 6 LL
	8	TN 195 - 8 LL
轻型 L	6	TN 195 - 6 L
	8	TN 195 - 8 L
	10	TN 195 - 10 L
	12	TN 195 - 12 L
	15	TN 195 - 15 L
	18	TN 195 - 18 L
	22	TN 195 - 22 L
	28	TN 195 - 28 L
	35	TN 195 - 35 L
	42	TN 195 - 42 L
重型 S	6	TN 195 - 6 S
	8	TN 195 - 8 S
	10	TN 195 - 10 S
	12	TN 195 - 12 S
	14	TN 195 - 14 S
	16	TN 195 - 16 S
	20	TN 195 - 20 S
	25	TN 195 - 25 S
	30	TN 195 - 30 S
	38	TN 195 - 38 S

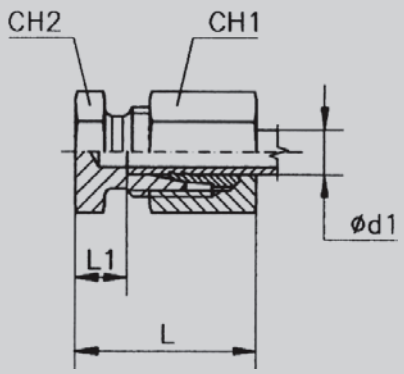

TN 296

Pipe plug
管端堵头

系列	Ø 钢管外径 d_1	公称压力 PN	尺寸					订货型号	重量 kg./100 件
			L	L1	CH1	CH2			
轻型 L	6	315	22	7	14	12		TN 296 - 6 L	2.0
	8		23	8	17	14		TN 296 - 8 L	2.8
	10		24	9	19	17		TN 296 - 10 L	3.8
	12		25	10	22	19		TN 296 - 12 L	5.0
	15		26	11	27	24		TN 296 - 15 L	8.3
	18		28	11.5	32	27		TN 296 - 18 L	12.0
	22	160	30	13.5	36	32		TN 296 - 22 L	16.5
	28		31	14.5	41	41		TN 296 - 28 L	22.5
	35		36	14.5	50	46		TN 296 - 35 L	35.0
	42		39	16	60	55		TN 296 - 42 L	52.0
重型 S	6	630	26	11	17	14		TN 296 - 6 S	3.5
	8		28	13	19	17		TN 296 - 8 S	4.8
	10		29	12.5	22	19		TN 296 - 10 S	6.5
	12		31	14.5	24	22		TN 296 - 12 S	8.5
	14		34	16	27	24		TN 296 - 14 S	11.5
	16	400	34	15.5	30	27		TN 296 - 16 S	14.0
	20		39	17.5	36	32		TN 296 - 20 S	22.8
	25		44	20	46	41		TN 296 - 25 S	43.0
	30		47	20.5	50	46		TN 296 - 30 S	52.0
	38	315	54	23	60	55		TN 296 - 38 S	81.0

Overall sizes are with closed fitting.
总长为预安装后的长度。

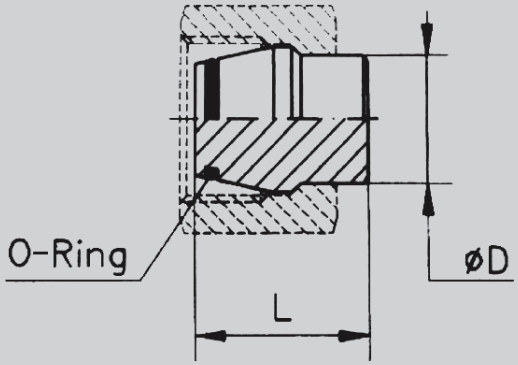

TN 324

Pipe plug for TN 87 connection with O-Ring seal
锥孔带O型圈堵头

系列	Ø 钢管外径 D	公称压力 PN	尺寸 L	O 型圈尺寸		订货型号	重量 kg./100 件
轻型 L	6	315	18.5	4 × 1.5		TN 324 - 6 LS	0.6
	8		18.5	6 × 1.5		TN 324 - 8 LS	0.9
	10		20	7.5 × 1.5		TN 324 - 10 LS	1.4
	12		20.5	9 × 1.5		TN 324 - 12 LS	1.9
	15		20.5	12 × 2		TN 324 - 15 L	3.2
	18		22.5	15 × 2		TN 324 - 18 L	6.2
	22	160	25	20 × 2		TN 324 - 22 L	10.0
	28		25.5	26 × 2		TN 324 - 28 L	15.0
	35		30	32 × 2.5		TN 324 - 35 L	25.3
	42		30	38 × 2.5		TN 324 - 42 L	36.0
重型 S	6	630	18.5	4 × 1.5		TN 324 - 6 LS	0.6
	8		18.5	6 × 1.5		TN 324 - 8 LS	0.9
	10		20	7.5 × 1.5		TN 324 - 10 LS	1.4
	12		20.5	9 × 1.5		TN 324 - 12 LS	1.9
	14		22.5	10 × 2		TN 324 - 14 S	2.7
	16	400	23.5	12 × 2		TN 324 - 16 S	4.5
	20		28.5	16.3 × 2.4		TN 324 - 20 S	7.8
	25		29	20.3 × 2.4		TN 324 - 25 S	12.0
	30		30.5	25.3 × 2.4		TN 324 - 30 S	18.0
	38	315	33	33.3 × 2.4		TN 324 - 38 S	31.0

Overall sizes are with closed fitting.
总长为预安装后的长度。

* Temperature range without pressure reductions with connections fitted with O-Rings in NBR (standard) and FPM (to order):

NBR (Perbunan): from -35 to +100℃ - FPM (Viton): from -25 to +120℃
适合带橡胶垫的零件工作温度范围：NBR 丁晴橡胶 -35° 至 +100℃ PM (Viton): 氟橡胶 -25 t 至 +120℃

CONNECTION TO THE BODY OF THE UNION
装配指南

(1) Oil the thread of the nut TN 81. O-Ring seal and the thread of the union.
TN81 的螺母螺纹，O 型圈，接头体螺纹都涂上润滑剂

(2) Insert the tapers 24° of TN 324 into the tapered seat 24° of the union and fully tighten the nut TN 81 by hand.
把 TN324 螺母的 24° 螺纹与接头体的 24° 锥对接，用手完全拧紧螺母 TN81

(3) Tighten the nut TN 81 by 1/4 to 1/2 turn.
用扳手再拧紧 ¼ 到 ½ 圈

RASTELLI RACCORDI - s.r.l.
I - 27019 VILLANTERIO (PV)

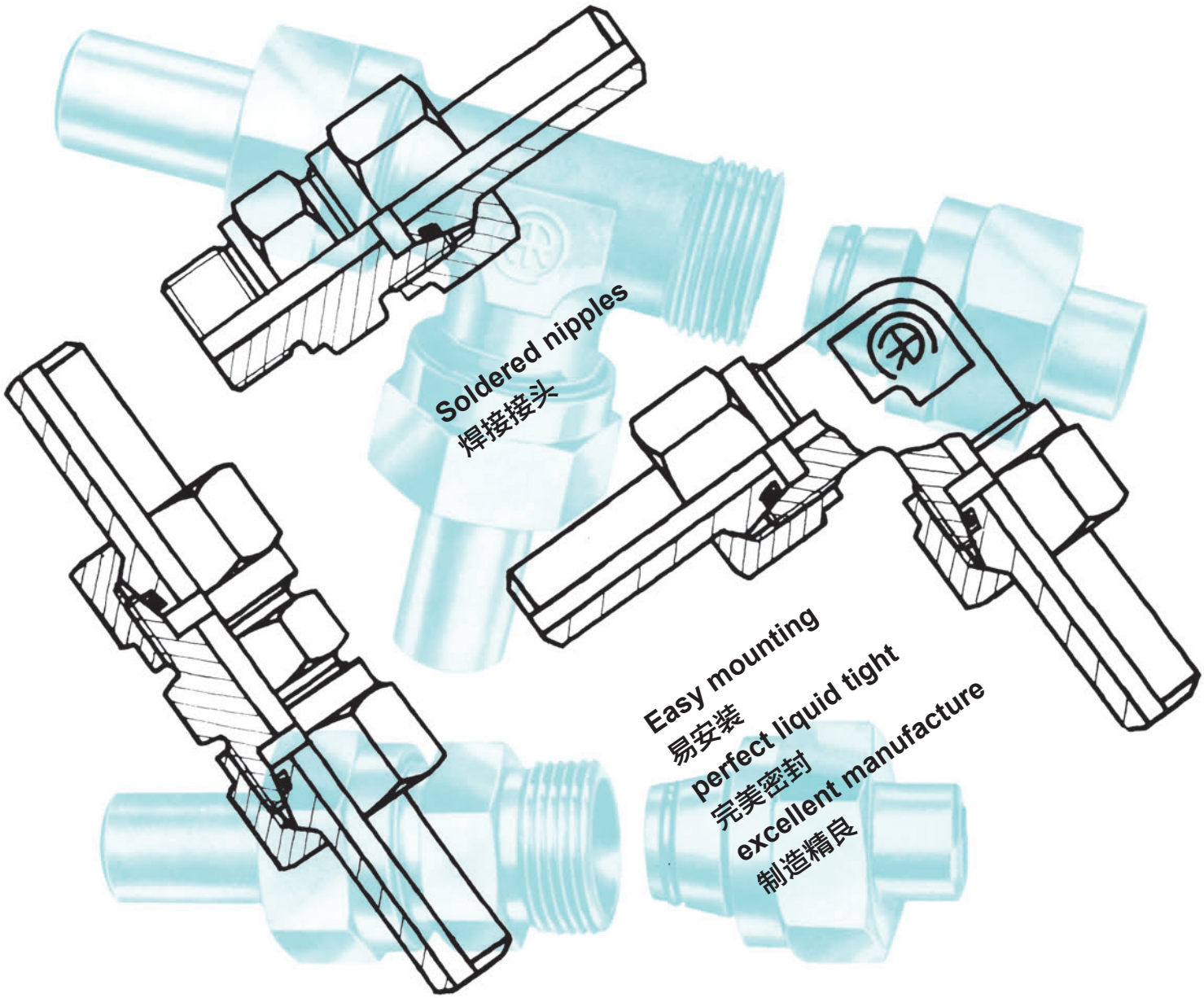

Welding nipples for TN 299B couplings are manufactured to A-type DIN 3865 standards. They are used in conjunction with Rastelli couplings and nuts from the S series for diameters ranging from Ø10 to Ø38. The O-ring is generally made from NBR (Perbunan) which is ideal for temperatures ranging from -35℃ to +100℃ .

For higher temperatures and special fluids (phosphorus-ester acid-based fluids). use FPM O-Rings (Viton) which are supplied on special request only which is ideal for temperatures ranging from -25° to + 120℃ .

TN299B 焊接接头根据 DIN3865 标准 A 部分生产，RASTELLI 接头和螺母的重型系列的尺寸范围从 Ø10 到 Ø38 都适用。

橡胶垫圈材质一般为丁晴橡胶，温度范围：-35° 到 +100°

如温度要求更高或者特殊流体介质的工作环境（如磷脂类液体），我们建议采用特殊材质的密封圈（氟橡胶），其工作温度范围：-25° 到 +120°

CONNECTION TO THE BODY OF THE UNION
安装须知

(1) Oil the thread of the nut TN 81. O-Ring seal and the thread of the union.
润滑螺母，O 型圈和接头体螺纹

(2) Insert the taperes 24° of TN 299 into the tapered seat 24° of the union and fully tighten the nut TN 81 by hand.
插入 TN299 的 24° 锥面到接头体的锥面，用手拧紧螺母

(3) Tighten the nut TN 81 by ¼ to ½ turn.
用扳手旋紧 1/4 到 1/2 圈

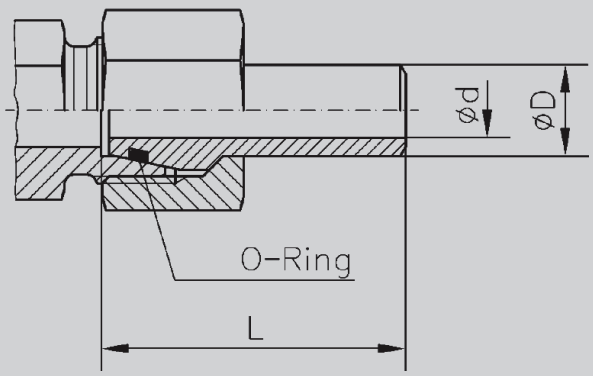

TN 299 B

Schwelßnippel mit O-Ring-Abdichtung
带O型密封圈的焊接接管

系列	Ø 钢管外径	公称压力 PN	Ø 钢管壁厚 mm	尺寸			O 型圈尺寸	订货型号	重量 kg./100 件
				Ø D	Ø d	L			
轻型 / 重型 L/S	10	315	10 × 1.5	10	7	33.5	7.5 × 1.5	TN 299 B - 10 × 1.5	1.3
	10	400	10 × 2	10	6	33.5	7.5 × 1.5	TN 299 B - 10 × 2	1.4
	12	315	12 × 1.5	12	9	33.5	9 × 1.5	TN 299 B - 12 × 1.5	2.1
	12	400	12 × 2	12	8	33.5	9 × 1.5	TN 299 B - 12 × 2	2.0
	12	630	12 × 2.5	12	7	33.5	9 × 1.5	TN 299 B - 12 × 2.5	2.1
轻型 L	15	315	15 × 2.5	15	10	35	12 × 2	TN 299 B - 15 × 2.5	3.1
	18	315	18 × 2.5	18	13	37	15 × 2	TN 299 B - 18 × 2.5	4.0
	22	160	22 × 2.5	22	17	39.5	20 × 2	TN 299 B - 22 × 2.5	5.7
	28	160	28 × 2.5	28	23	42.5	26 × 2	TN 299 B - 28 × 2.5	7.3
	35	160	35 × 3	35	29	49.5	32 × 2.5	TN 299 B - 35 × 3	13.0
	42	160	42 × 3	42	36	50	38 × 2.5	TN 299 B - 42 × 3	15.5
重型 S	14	400	14 × 3	14	8	40	10 × 2	TN 299 B - 14 × 3	3.0
	16	250	16 × 2	16	12	40.5	12 × 2	TN 299 B - 16 × 2	3.1
	16	315	16 × 2.5	16	11	40.5	12 × 2	TN 299 B - 16 × 2.5	3.8
	16	400	16 × 3	16	10	40.5	12 × 2	TN 299 B - 16 × 3	3.8
	20	250	20 × 2.5	20	15	47	16.3 × 2.4	TN 299 B - 20 × 2.5	5.7
	20	315	20 × 3	20	14	47	16.3 × 2.4	TN 299 B - 20 × 3	6.4
	20	400	20 × 4	20	12	47	16.3 × 2.4	TN 299 B - 20 × 4	7.2
	25	250	25 × 3	25	19	53.5	20.3 × 2.4	TN 299 B - 25 × 3	8.9
	25	315	25 × 4	25	17	53.5	20.3 × 2.4	TN 299 B - 25 × 4	11.4
	25	400	25 × 5	25	15	53.5	20.3 × 2.4	TN 299 B - 25 × 5	12.5
	30	160	30 x 3	30	24	57.5	25.3 × 2.4	TN 299 B - 30 × 3	11.3
	30	250	30 x 4	30	22	57.5	25.3 × 2.4	TN 299 B - 30 × 4	14.1
	30	315	30 x 5	30	20	57.5	25.3 × 2.4	TN 299 B - 30 × 5	16.4
	30	315	30 × 6	30	18	57.5	20.3 × 2.4	TN 299 B - 30 × 6	18.8
	38	160	38 × 3	38	32	64.5	33.3 × 2.4	TN 299 B - 38 × 3	16.3
	38	250	38 × 5	38	28	64.5	33.3 × 2.4	TN 299 B - 38 × 5	24.7
	38	315	38 × 6	38	26	64.5	33.3 × 2.4	TN 299 B - 38 × 6	27.0
	38	315	38 × 7	38	24	64.5	33.3 × 2.4	TN 299 B - 38 × 7	30.4

Overall sizes are with closed fitting.
总长为预安装后的长度。

Temperature range without pressure reductions with connections fitted with O-Rings in NBR (standard) and FPM (to order):

NBR (Perbunan): from -35 to +100℃ - FPM (Viton): from -25 to +120℃

适合带橡胶垫的零件工作温度范围：NBR 丁晴橡胶 -35° 至 +100℃，PM (Viton)：氟橡胶 -25℃至 +120℃

RASTELLI RACCORDI - s.r.l.
I - 27019 VILLANTERIO (PV)

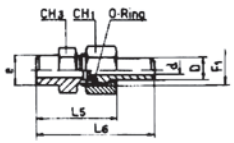

TN 313 Soldered terminal fitting

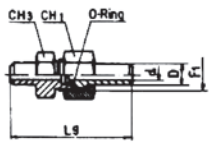

TN 317 Straight soldered fitting

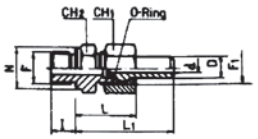

TN 300 R/M Straight terminal fitting

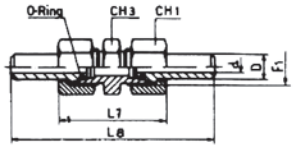

TN 305 Straight intermediate fitting

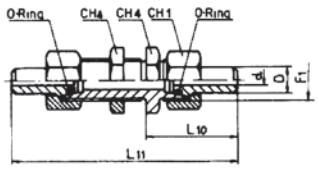

TN 314 Straight bulkead fitting

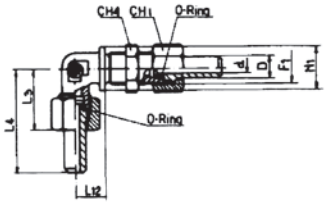

TN 316 Bulkead elbow

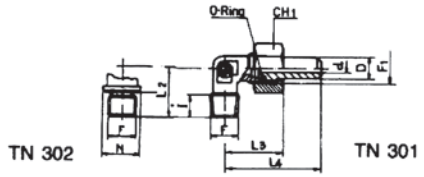

TN 302 R/M Terminal elbow

TN 301 R/M/NPT Terminal elbow

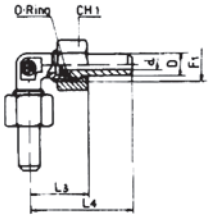

TN 306 Intermediate elbow

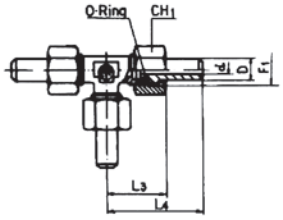

TN 307 Intermediate Tee

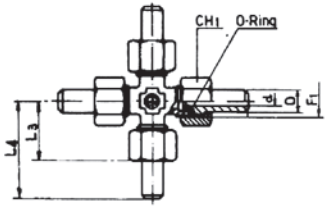

TN 308 Intermediate cross

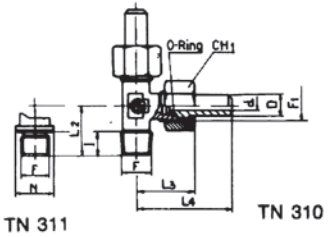

TN 311 R/M Terminal bend

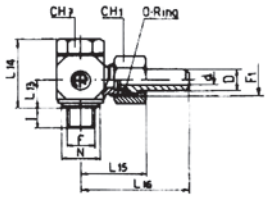

TN 309 R/M Hinged fitting

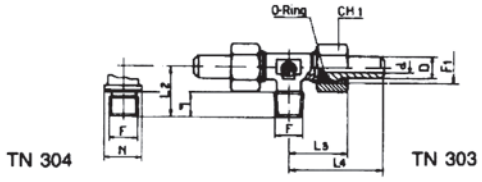

TN 304 R/M Terminal Tee

TN 303 R/M/NPT Terminal Tee

TN 310 R/M/NPT Terminal bend

Ø Tubo Rohr AD Tube O.D. Ø Tube DIN 2391	D	d	F1	F (M)	F (R/ NPT)	CH1	CH2		CH3	CH4	CH7	L	L1	L2	L3	L4	L5	L6	L7	L8	L9	L10	L11	L12	L13		L14		L15		L16		I	N		N1	e	DISPONIBILTÀ - VERFUEGBARKEIT AVAILABILITY - A DISPOSITION					
							M	R																	M	R	M	R	M	R	M	R		M	R			TN 300 M/R	TN 301-303 310 M	TN 302-304 311 M/R	TN 301-303 310 R/NPT 308-314-316	TN 305-306 307-317 309	TN 313
10 × 2	10	6	18 × 1.5	16 × 1.5	3/8"	22	22		19	24	24	33	57	28	35	59	41	61	52	100	65	56	143	20	18		38.5		35.5		59.5		12	21	22	24	15	•	•		•	•	
12 × 2.5	12	7	20 × 1.5	18 × 1.5	3/8"	24	24	22	22	27	24	35	59	31	39	63	42	66	53	101	65	56	144	21	19.5	18	42.5	38.5	37	35.5	61	59.5	12	23	22	27	17	•	•		•	•	
14 × 3	14	8	22 × 1.5	20 × 1.5	1/2"	27	27		24	30	27	38	64	32	41	67	46	74	60	112	70	63	156	23	20.5	21	45.5		41		67		14	25	26	27	19	•	•		•	•	
16 × 3	16	10	24 × 1.5	22 × 1.5	1/2"	30	27		27	32	27	38	67	32	44	73	46	77	61	119	75	67	163	24	22.5	21	48.5	45.5	43	41	72	70	14	27	26	30	21	•	•		•	•	
20 × 4	20	12	30 × 2	27 × 2	3/4"	36	32		32	41	32	44	77	42	50	83	53	87	71	137	85	74	181	30	28.5	28	61		52		85		16	32		36	26	•		•	•	•	
25 × 4	25	17	36 × 2	33 × 2	1"	46	41		41	46	41	48	84	42	55	91	57	96	76	148	95	81	193	34	31		68		56		92		18	39		42	31	•		•	•	•	
30 × 5	30	20	42 × 2	42 × 2	1"1/4	50	50		46	50	50	53	92	54	65	114	65	109	87	185	105	92	224	39	36	36.5	79		66		115		20	49		50	36	•		•	•	•	
38 × 6	38	26	52 × 2	48 × 2	1"1/2	60	55		55	65	55	56	107	61	71	122	68	118	90	192	120	102	236	43	41	41.5	90		71		122		22	55		60	44	•		•	•	•	

- Natura della filettatura di estremità:
  R = Gas cilindrica
  M = Metrica cilindrica
  NPT = ANSI/ASME
  B.1.20.1 (1983)

- Beschaffenheit des Gewindeendes:
  R = Whitworth-Rohrgewinde zylindrisch
  M = Metrisches Feingwinde zylindrisch
  NPT = ANSI/ASME
  B.1.20.1 (1983)

- Nature of the end thread:
  R = B.S.P. parallel
  M = Metric parallel
  NPT = ANSI/ASME
  B.1.20.1 (1983)

- Type du filetage à l'extrémité:
  R = Gaz cylindrique
  M = Métrique cylindrique
  NPT = ANSI/ASME
  B.1.20.1 (1983)

RASTELLI RACCORDI - s.r.l.
I - 27019 VILLANTERIO (PV)

AR3/C

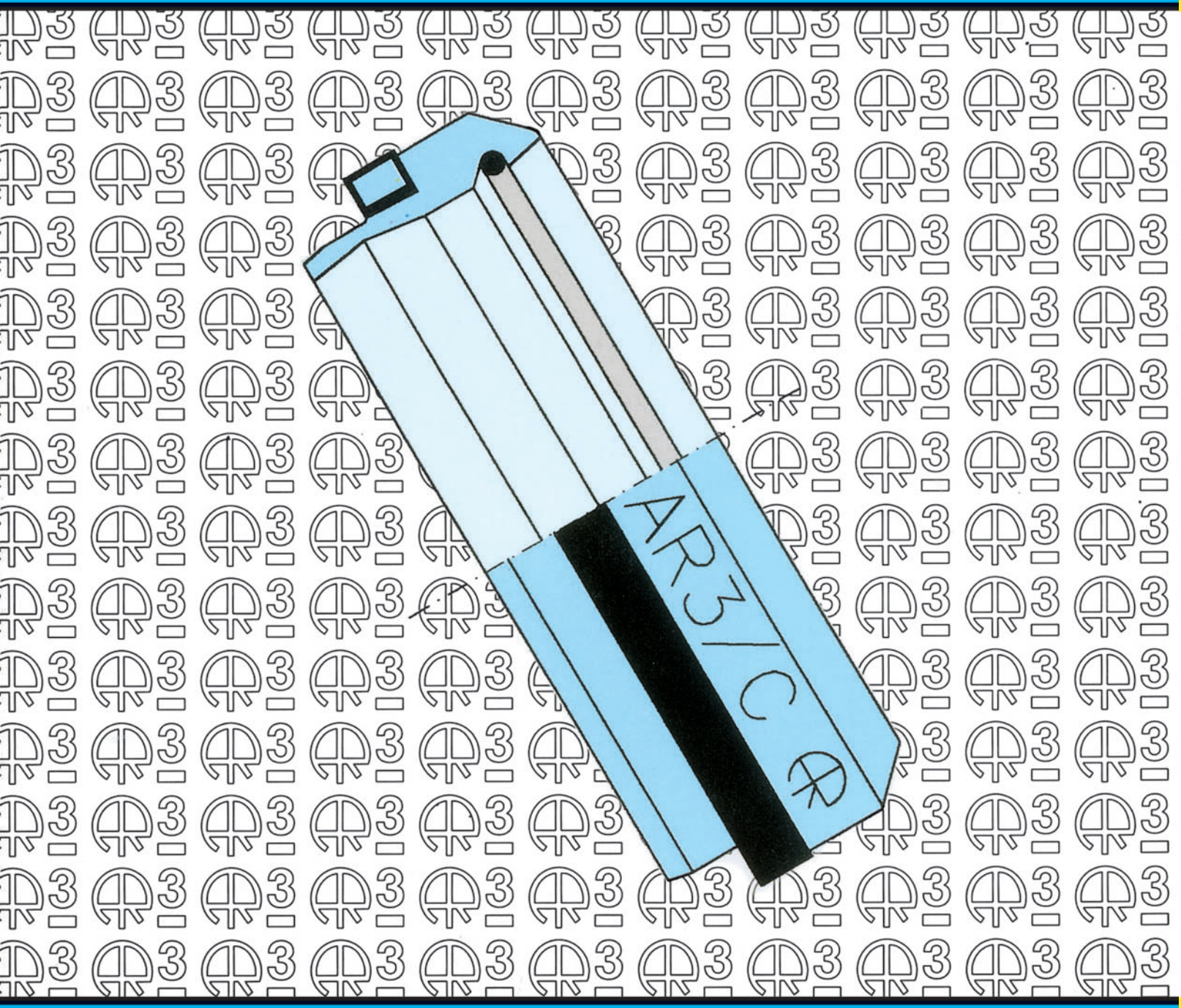

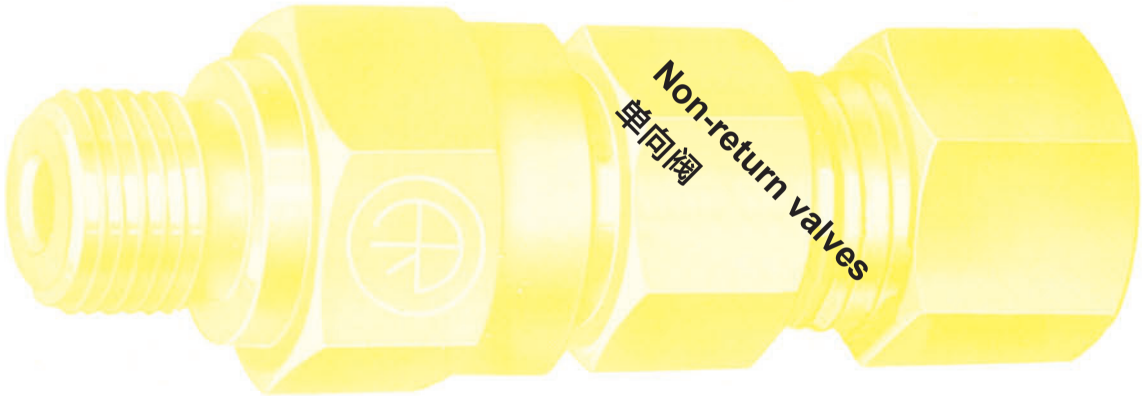

Non-return valves
单向阀

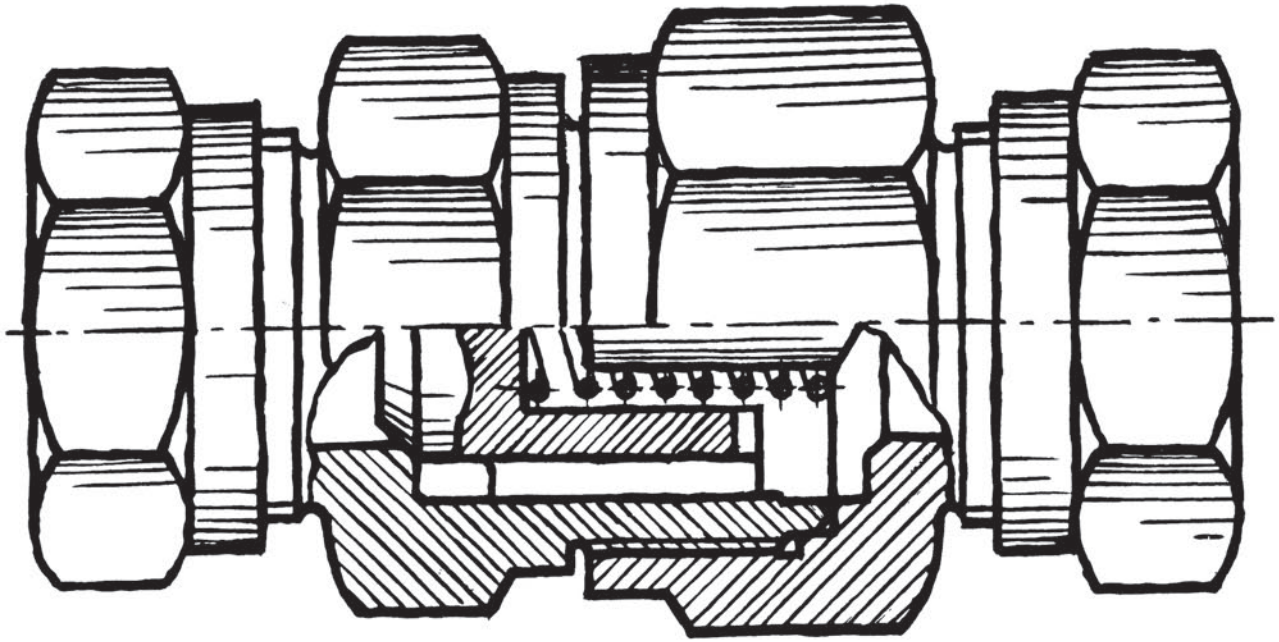

TN 106 - TN 107 - TN 108

No-return Values

单向阀

The simple check valves are used where the fluid has a unique flowing direction and when it is kept under pressure in the using environment (by separating it from the feed source) from which it subsequently comes out by an other path.

Our check valves have been designed according to the special characteristics of the various fluids. We guarantee their perfect operation in the most severe service conditions. thanks to very careful machining. selection of the materials more convenient for individual parts and thanks to their special thermal treatment which give them a high wear resistance.

简单的单向阀应用于流体只能一个方向流动，该油口由给定的压力环境去克服单向阀内部的弹簧力，从而将出口方的压力油反向流入口方向。

Rastell 单向阀根据各种流质的性能而设计，借助于精密的生产加工工艺我们确保单向阀在最苛刻的使用条件下完全发挥其作用，配件的材质选择及特殊的热处理，提供了高水平的耐磨性。

Test pressure = PE x 1.3. Check value leakage during hydraulic testing with test pressure equal to permissible operating pressure:

压力测试 =PE×1.3 测试压力等同于实际工作压力

1 drop in test time of 1 minute.

1 分钟测试时间

Max flow rate 8 m/sec. Applications: hydraulic oils and non flammable hydraulic liquids.

最大工作流连 8m/S，应用介质：液压油和非易燃液压液体

SPECIAL CALIBRATION
专用标准

0.5 BAR ± 20%	6L ÷ 42L	6S ÷ 38S
2 BAR ± 20%	6L ÷ 42L	6S ÷ 38S
2.5 BAR ± 20%	28L ÷ 35L ÷ 42L	30S ÷ 38S
3 BAR ± 20%	6L ÷ 22L	6S ÷ 25S

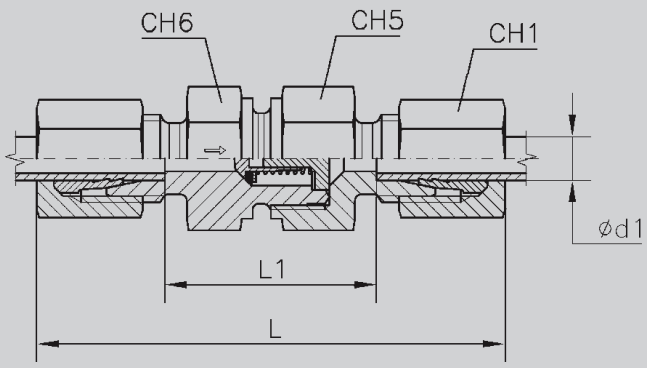

TN 106

Non-return valves
单向阀
流向如箭头所示

系列	Ø 钢管外径 d_1	公称压力 PN	尺寸						订货型号	重量 kg./100 件
			L	L1	CH1	CH5	CH6			
轻型 L	6	250	58	29	14	17	17		TN 106 - 6 L	6.6
	8		59	30	17	19	19		TN 106 - 8 L	8.5
	10		69.5	40.5	19	24	22		TN 106 - 10 L	14.5
	12		72.5	43.5	22	30	27		TN 106 - 12 L	22.0
	15		77.5	47.5	27	32	27		TN 106 - 15 L	28.0
	18	160	83.5	51.5	32	36	36		TN 106 - 18 L	42.0
	22		93.5	61.5	36	46	41		TN 106 - 22 L	63.5
	28	100	102.5	69.5	41	55	50		TN 106 - 28 L	93.0
	35		117.5	74.5	50	60	60		TN 106 - 35 L	130.5
	42		119	74	60	70	65		TN 106 - 42 L	200.0
重型 S	6	400	63.5	34.5	17	19	19		TN 106 - 6 S	10.5
	8		63.5	34.5	19	19	19		TN 106 - 8 S	11.5
	10		72.5	40.5	22	24	22		TN 106 - 10 S	18.2
	12		74.5	42.5	24	27	24		TN 106 - 12 S	21.5
	14		82.5	47.5	27	32	27		TN 106 - 14 S	31.0
	16		86.5	50.5	30	36	32		TN 106 - 16 S	42.0
	20		97.5	54.5	36	46	41		TN 106 - 20 S	72.0
	25	250	106.5	58.5	46	50	46		TN 106 - 25 S	108.0
	30		122.5	69.5	50	60	60		TN 106 - 30 S	156.0
	38		136.5	75.5	60	70	65		TN 106 - 38 S	233.0

Overall sizes are with closed fitting.
总长为预安装后的长度。
Opening pressure 1 BAR ±20%
打开压力为 1Bar±20%

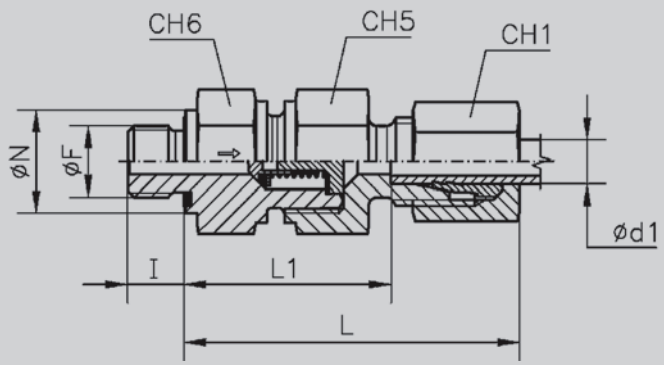

TN 107 RGG

Non-return valves rubber seal
带ED圈单向阀
可连接螺纹形式：英制圆柱螺纹
密封形式：DIN 3852第十一部分
的带弹性密封体结构
流向如箭头所示

系列	Ø 钢管外径 d_1	公称压力 PN	尺寸									订货型号	重量 kg./100 件
			Ø F	Ø N	I	L1	L	CH1	CH5	CH6			
轻型 L	6	250	1/8"	14	8	28	42.5	14	17	17		TN 107 GG - 6 LR	5.5
	8		1/4"	19	12	30	44.5	17	19	19		TN 107 GG - 8 LR	8.0
	10		1/4"	19	12	38.5	53	19	24	22		TN 107 GG - 10 LR	12.5
	12		3/8"	22	12	42.5	57	22	30	27		TN 107 GG - 12 LR	20.0
	15		1/2"	27	14	45.5	60.5	27	32	27		TN 107 GG - 15 LR	25.0
	18	160	1/2"	27	14	50	66	32	36	36		TN 107 GG - 18 LR	35.6
	22		3/4"	32	16	55	71	36	46	41		TN 107 GG - 22 LR	53.0
	28	100	1"	40	18	63	79.5	41	55	50		TN 107 GG - 28 LR	80.5
	35		1"1/4	50	20	69	90.5	50	60	60		TN 107 GG - 35 LR	115.2
	42		1"1/2	55	22	68.5	91	60	70	65		TN 107 GG - 42 LR	179.0
重型 S	6	400	1/4"	19	12	31.5	46	17	19	19		TN 107 GG - 6 SR	9.1
	8		1/4"	19	12	31.5	46	19	19	19		TN 107 GG - 8 SR	9.5
	10		3/8"	22	12	38	54	22	24	22		TN 107 GG - 10 SR	15.5
	12		3/8"	22	12	41	57	24	27	24		TN 107 GG - 12 SR	19.0
	14		1/2"	27	14	44.5	62	27	32	27		TN 107 GG - 14 SR	27.0
	16		1/2"	27	14	48	66	30	36	32		TN 107 GG - 16 SR	36.5
	20		3/4"	32	16	52	73.5	36	46	41		TN 107 GG - 20 SR	62.5
	25	250	1"	40	18	54.5	78.5	46	50	46		TN 107 GG - 25 SR	86.5
	30		1"1/4	50	20	64	90.5	50	60	60		TN 107 GG - 30 SR	140.5
	38		1"1/2	55	22	69.5	100	60	70	65		TN 107 GG - 38 SR	195.2

Overall sizes are with closed fitting.
总长为预安装后的长度。
Opening pressure 1 BAR ± 20%
打开压力为 1Bar ± 20%

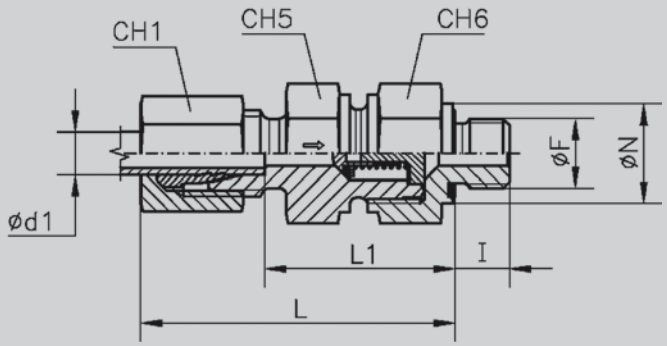

TN 108 RGG

Non-return valves rubber seal
带ED圈单向阀
可连接螺纹形式：英制圆柱螺纹
密封形式：DIN 3852第十一部分
的带弹性密封体结构
流向如箭头所示

系列	Ø 钢管外径 d_1	公称压力 PN	尺寸									订货型号	重量 kg./100 件
			Ø F	Ø N	I	L1	L	CH1	CH5	CH6			
轻型 L	6	250	1/8"	14	8	26.5	41	14	17	17		TN 108 GG - 6 LR	5.5
	8		1/4"	19	12	28.5	43	17	19	19		TN 108 GG - 8 LR	7.5
	10		1/4"	19	12	38.5	53	19	22	24		TN 108 GG - 10 LR	12.5
	12		3/8"	22	12	40.5	55	22	27	30		TN 108 GG - 12 LR	18.5
	15		1/2"	27	14	42.5	57.5	27	27	32		TN 108 GG - 15 LR	23.0
	18	160	1/2"	27	14	48	64	32	36	36		TN 108 GG - 18 LR	34.5
	22		3/4"	32	16	56	72	36	41	46		TN 108 GG - 22 LR	53.0
	28	100	1"	40	18	64	80.5	41	50	55		TN 108 GG - 28 LR	81.5
	35		1"1/4	50	20	70	91.5	50	60	60		TN 108 GG - 35 LR	118.0
	42		1"1/2	55	22	70.5	93	60	65	70		TN 108 GG - 42 LR	182.5
重型 S	6	400	1/4"	19	12	31.5	46	17	19	19		TN 108 GG - 6 SR	9.0
	8		1/4"	19	12	31.5	46	19	19	19		TN 108 GG - 8 SR	9.5
	10		3/8"	22	12	38	54	22	22	24		TN 108 GG - 10 SR	15.5
	12		3/8"	22	12	41	57	24	24	27		TN 108 GG - 12 SR	19.0
	14		1/2"	27	14	43.5	61	27	27	32		TN 108 GG - 14 SR	27.0
	16		1/2"	27	14	46	64	30	32	36		TN 108 GG - 16 SR	34.5
	20		3/4"	32	16	50	71.5	36	41	46		TN 108 GG - 20 SR	59.5
	25	250	1"	40	18	54.5	78.5	46	46	50		TN 108 GG - 25 SR	86.5
	30		1"1/4	50	20	64	90.5	50	60	60		TN 108 GG - 30 SR	132.5
	38		1"1/2	55	22	71.5	102	60	65	70		TN 108 GG - 38 SR	198.5

Overall sizes are with closed fitting.
总长为预安装后的长度。
Opening pressure 1 BAR ± 20%
打开压力为 1Bar ± 20%

LOAD LOSS
负载损耗

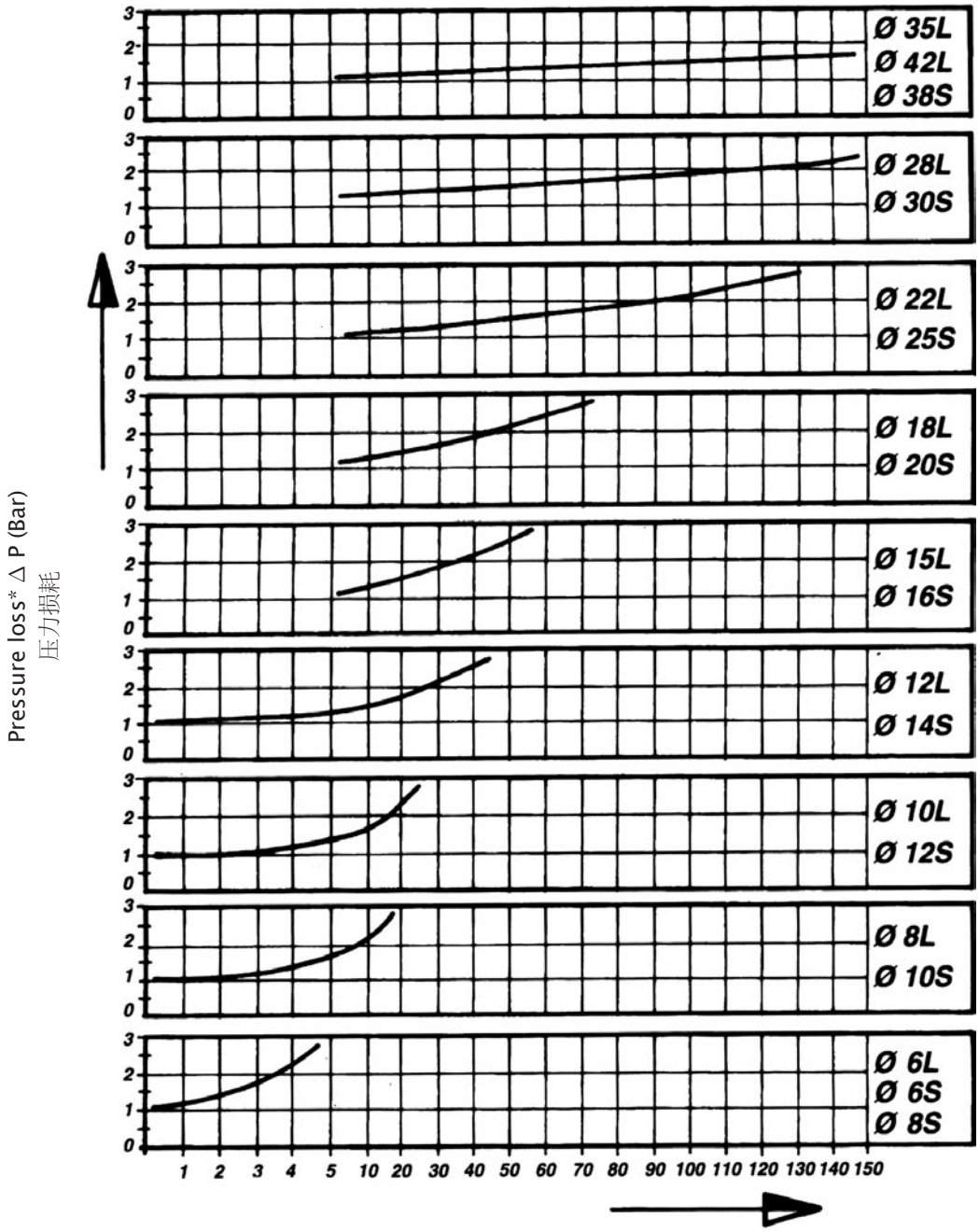

* Measured using hydraulic oil (klinematic viscosity) 33CST ≈ 4.5° and at 55℃
推荐流速的使用条件为最大粘度 33CsT 约等于 4.5° 至 55° 范围内。

** Values calculated for coupling TN 106 are also valid for TN 107 and TN 108 couplings. Cracking pressure 1 Bar.
同适用于 TN106/TN107/ TN108，破裂压力为 1Bar。

TN 400

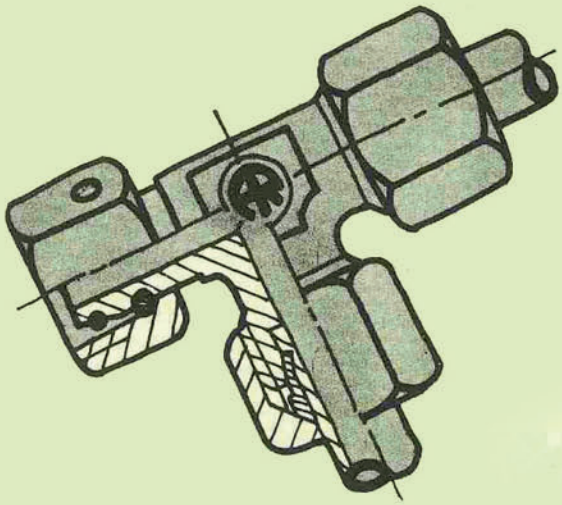

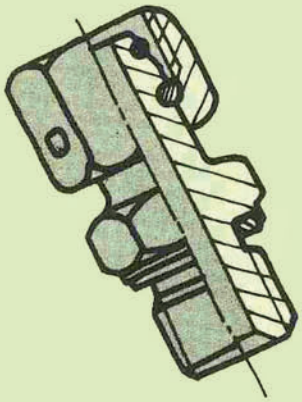

Taper Fittings
可调式接头

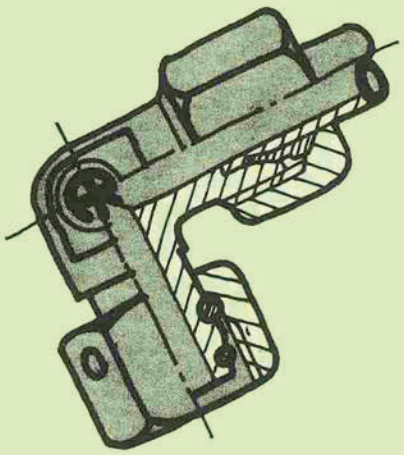

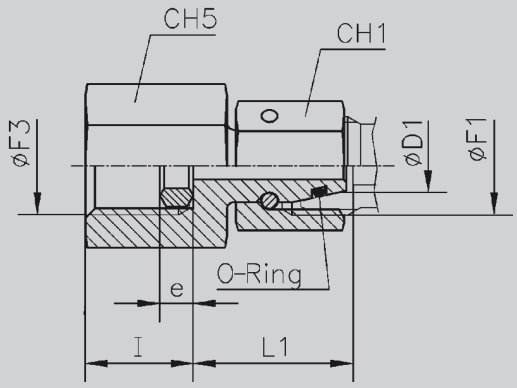

TN 403

Gauge Couplings with O-Ring seal
压力表接头，锥体带O型圈
可连接螺纹形式：英制圆柱螺纹

系列	Ø 钢管外径 d_1	公称压力 PN	尺寸							O 型圈尺寸	订货型号	重量 kg./100 件
			Ø F3	Ø F1	L1	CH1	CH5	e*	I			
轻型 L	6	315	1/4"	12 × 1.5	21	14	19	4.5	14.5	4x1.5	TN 403 - 6 L	4.9
	8		1/4"	14 × 1.5	21.5	17	19	4.5	14.5	6x1.5	TN 403 - 8 L	5.3
	10		1/4"	16 × 1.5	22	19	19	4.5	14.5	7.5x1.5	TN 403 - 10 L	6.0
	12		1/4"	18 × 1.5	22	22	19	4.5	14.5	9.5x1.5	TN 403 - 12 L	6.8
重型 S	6	630	1/2"	14 × 1.5	23	17	27	5	20	4x1.5	TN 403 - 6 S	10.5
	8		1/2"	16 × 1.5	23.5	19	27	5	20	6x1.5	TN 403 - 8 S	10.5
	10		1/2"	18 × 1.5	23.5	22	27	5	20	7.5x1.5	TN 403 - 10 S	12.0
	12		1/2"	20 × 1.5	25	24	27	5	20	9x1.5	TN 403 - 12 S	12.8

Overall sizes are with closed fitting.
总长为预安装后的长度。
* Temperature range without pressure reductions with connections fitted with O-Ring in NBR (standard) and FPM (to order): NBR (Perbunan): from -35 to +100℃ - FPM (Viton): from -25 to +120°
适合带橡胶垫的零件工作温度范围：NBR 丁晴橡胶 -35° 至 +100℃，PM (Viton): 氟橡胶 -25 t 至 +120℃

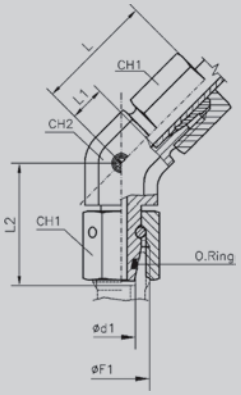

TN 417

Rotary fitting 45° with O.ring seal
可调式45° 角通接头，锥体带O型圈

系列	Ø 钢管外径 d_1	公称压力 PN	尺寸 L ≈	L1	L2	Ø F1	CH1	CH2	* O 型圈尺寸	订货型号	重量 kg./100 件
轻型 L	6	315	24.5	9.5	26	12 × 1.5	14	14	4 × 1.5	TN 417 - 6 L	4.3
	8		27	12	27.5	14 × 1.5	17	14	6 x 1.5	TN 417 - 8 L	5.7
	10		27	12	29	16 × 1.5	19	19	7.5 × 1.5	TN 417 - 10 L	7.3
	12		29	14	29.5	18 × 1.5	22	19	9 × 1.5	TN 417 - 12 L	10.0
	15		32	17	32.5	22 × 1.5	27	22	12 × 2	TN 417 - 15 L	16.8
	18		33	17	35.5	26 × 1.5	32	27	15 × 2	TN 417 - 18 L	24.1
	22	160	35.5	19.5	38.5	30 × 2	36	33	20 × 2	TN 417 - 22 L	42.1
	28		39	23	41.5	36 × 2	41	41	26 × 2	TN 417 - 28 L	55.9
	35		48	27	51	45 × 2	50	48	32 × 2.5	TN 417 - 35 L	67.8
	42		49	26	56	52 × 2	60	48	38 × 2.5	TN 417 - 42 L	75.9
重型 S	6	630	26	11	27	14 × 1.5	17	14	4 × 1.5	TN 417 - 6 S	6.4
	8		28	13	27.5	16 × 1.5	19	19	6 × 1.5	TN 417 - 8 S	8.4
	10		29	13	30	18 × 1.5	22	19	7.5 × 1.5	TN 417 - 10 S	11.5
	12		33	17	31	20 × 1.5	24	22	9 × 1.5	TN 417 - 12 S	15.4
	16	400	34	16	36.5	24 × 1.5	30	27	12 × 2	TN 417 - 16 S	22.4
	20		40	19	44.5	30 × 2	36	33	16.3 × 2.4	TN 417 - 20 S	33.1
	25		46	22	50	36 × 2	46	41	20.3 × 2.4	TN 417 - 25 S	68.5
	30		50	24	55	42 × 2	50	48	25.3 × 2.4	TN 417 - 30 S	75.2
	38	315	55	24	63	52 × 2	60	48	33.3 × 2.4	TN 417 - 38 S	86.2

Overall sizes are with closed fitting.
总长为预安装后的长度。

* Temperature range without pressure reductions with connections fitted with O-Ring in NBR (standard) and FPM (to order):
NBR (Perbunan): from -35 to +100℃ - FPM (Viton): from -25 to +120℃
适合带橡胶垫的零件工作温度范围：NBR 丁晴橡胶 -35° 至 +100℃，PM (Viton)：氟橡胶 -25 t 至 +120℃

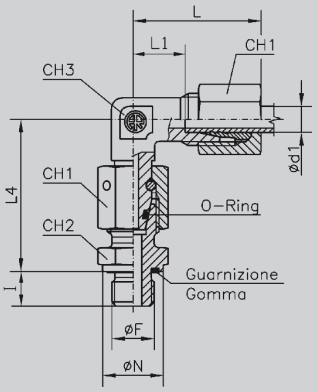

TN 414

Swivel Elbows with O-Ring Seal

可调式直角管接头（带接头体），锥体带O型圈

可连接螺纹形式：英制圆柱螺纹

公制圆柱螺纹

密封形式：DIN 3852第十一部分的带弹性密封体结构

系列	Ø 钢管外径 d_1	公称压力 PN	尺寸						R				重量 kg./100 件	M					重量 kg./100 件
			l	L	L1	L4	CH1	CH3	CH2	ØF	ØN	订货型号		CH2	ØF	ØN	l	订货型号	
轻型 L	6	315	8	27	12	34.5	14	12	14	1/8”	14	TN 414 - 6 LR	5.3	14	10 × 1	14	8	TN 414 - 6 LM	5.3
	8		12	29	14	37.5	17	12	19	1/4”	19	TN 414 - 8 LR	8.2	17	12 × 1.5	17	12	TN 414 - 8 LM	7.5
	10		12	30	15	40	19	14	19	1/4”	19	TN 414 - 10 LR	9.8	19	14 × 1.5	19	12	TN 414 - 10 LM	10.0
	12		12	32	17	42	22	17	22	3/8”	22	TN 414 - 12 LR	13.7	22	16 × 1.5	22	12	TN 414 - 12 LM	13.5
	15		14	36	21	46	27	19	27	1/2”	27	TN 414 - 15 LR	23.7	24	18 × 1.5	24	12	TN 414 - 15 LM	21.5
	18		14	40	23.5	50	32	24	27	1/2”	27	TN 414 - 18 LR	30.5	27	22 × 1.5	27	14	TN 414 - 18 LM	31.0
	22	160	16	44	27.5	53	36	27	32	3/4”	32	TN 414 - 22 LR	43.0	32	26 × 1.5	32	16	TN 414 - 22 LM	43.0
	28		18	47	30.5	59	41	36	41	1”	40	TN 414 - 28 LR	69.5	41	33 × 2	40	18	TN 414 - 28 LM	69.2
	35		20	56	34.5	68.5	50	41	50	1”1/4	50	TN 414 - 35 LR	95.5	50	42 × 2	50	20	TN 414 - 35 LM	97.0
	42		22	63	40	75	60	50	55	1”1/2	55	TN 414 - 42 LR	142.5	55	48 × 2	55	22	TN 414 - 42 LM	143.5
重型 S	6	630	12	31	16	40	17	12	19	1/4”	19	TN 414 - 6 SR	9.7	17	12 × 1.5	17	12	TN 414 - 6 SM	9.0
	8		12	32	17	42.5	19	14	19	1/4”	19	TN 414 - 8 SR	11.5	19	14 × 1.5	19	12	TN 414 - 8 SM	11.5
	10		12	34	17.5	45	22	17	22	3/8”	22	TN 414 - 10 SR	16.8	22	16 × 1.5	22	12	TN 414 - 10 SM	16.7
	12		12	38	21.5	48	24	17	22	3/8”	22	TN 414 - 12 SR	20.3	24	18 × 1.5	24	12	TN 414 - 12 SM	21.0
	14		14	40	22	54	27	19	27	1/2”	27	TN 414 - 14 SR	29.0	27	20 × 1.5	26	14	TN 414 - 14 SM	28.5
	16	400	14	43	24.5	55	30	24	27	1/2”	27	TN 414 - 16 SR	35.0	27	22 × 1.5	27	14	TN 414 - 16 SM	35.5
	20		16	48	26.5	65	36	27	32	3/4”	32	TN 414 - 20 SR	55.0	32	27 × 2	32	16	TN 414 - 20 SM	55.3
	25		18	54	30	73	46	36	41	1”	40	TN 414 - 25 SR	102.0	41	33 × 2	40	18	TN 414 - 25 SM	101.5
	30		20	62	35.5	78.5	50	41	50	1”1/4	50	TN 414 - 30 SR	138.0	50	42 × 2	50	20	TN 414 - 30 SM	138.5
	38	315	22	72	41	89	60	50	55	1”1/2	55	TN 414 - 38 SR	199.0	55	48 × 2	55	22	TN 414 - 38 SM	199.5

Overall sizes are with closed fitting.

总长为预安装后的长度。

Temperature range without pressure reductions with connections fitted with O-Ring in NBR (standard) and FPM (to order):
NBR (Perbunan): from -35 to +100℃ - FPM (Viton): from -25 to +120℃

适合带橡胶垫的零件工作温度范围：NBR 丁晴橡胶 -35° 至 +100℃，PM (Viton): 氟橡胶 -25 t 至 +120℃

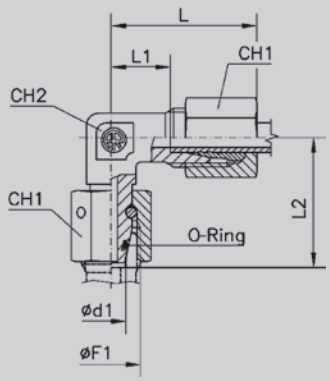

TN 419

Angular rotary fitting with O-Ring Seal
可调式直角接头，锥体带O型圈

系列	Ø 钢管外径 d_1	公称压力 PN	尺寸						O 型圈尺寸	订货型号	重量 kg./100 件
			L	L1	L2	Ø F1	CH1	CH2			
轻型 L	6	315	27	12	26	12 × 1.5	14	12	4 × 1.5	TN 419 - 6 L	4.0
	8		29	14	27.5	14 × 1.5	17	12	6 × 1.5	TN 419 - 8 L	5.5
	10		30	15	29	16 × 1.5	19	14	7.5 × 1.5	TN 419 - 10 L	7.0
	12		32	17	29.5	18 × 1.5	22	17	9 × 1.5	TN 419 - 12 L	9.5
	15		36	21	32.5	22 × 1.5	27	19	12 × 2	TN 419 - 15 L	16.5
	18		40	23.5	35.5	26 × 1.5	32	24	15 × 2	TN 419 - 18 L	23.5
	22	160	44	27.5	38.5	30 × 2	36	27	20 × 2	TN 419 - 22 L	32.5
	28		47	30.5	41.5	36 × 2	41	36	26 × 2	TN 419 - 28 L	52.5
	35		56	34.5	51	45 × 2	50	41	32 × 2.5	TN 419 - 35 L	69.0
	42		63	40	56	52 × 2	60	50	38 × 2.5	TN 419 - 42 L	105.0
重型 S	6	630	31	16	27	14 × 1.5	17	12	4 × 1.5	TN 419 - 6 S	6.2
	8		32	17	27.5	16 × 1.5	19	14	6 × 1.5	TN 419 - 8 S	7.5
	10		34	17.5	30	18 × 1.5	22	17	7.5 × 1.5	TN 419 - 10 S	11.3
	12		38	21.5	31	20 × 1.5	24	17	9 × 1.5	TN 419 - 12 S	14.0
	14		40	22	35	22 × 1.5	27	19	10 × 2	TN 419 - 14 S	19.5
	16	400	43	24.5	36.5	24 × 1.5	30	24	12 × 2	TN 419 - 16 S	26.0
	20		48	26.5	44.5	30 × 2	36	27	16.3× 2.4	TN 419 - 20 S	40.5
	25		54	30	50	36 × 2	46	36	20.3 × 2.4	TN 419 - 25 S	75.0
	30		62	35.5	55	42 × 2	50	41	25.3 × 2.4	TN 419 - 30 S	96.5
	38	315	72	41	63	52 × 2	60	50	33.3 × 2.4	TN 419 - 38 S	142.5

Overall sizes are with closed fitting.
总长为预安装后的长度。

* Temperature range without pressure reductions with connections fitted with O-Ring in NBR (standard) and FPM (to order):
NBR (Perbunan): from -35 to +100℃ - FPM (Viton): from -25 to +120℃
适合带橡胶垫的零件工作温度范围：NBR 丁晴橡胶 -35° 至 +100℃，PM (Viton): 氟橡胶 -25 t 至 +120℃

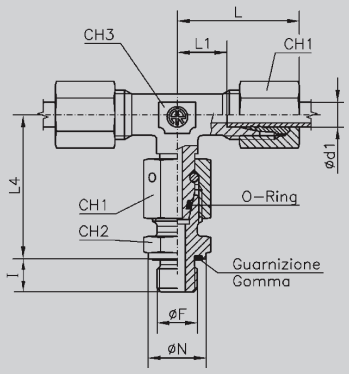

TN 415

Swivel Branch Tees with O-Ring Seal

可调式三通管接头（带接头体），锥体带O型圈

可连接螺纹形式：英制圆柱螺纹

公制圆柱螺纹

密封形式：DIN 3852第十一部分的带弹性密封体结构

系列	Ø 钢管外径 d_1	公称压力 PN	尺寸						R				重量 kg./100 件	M					重量 kg./100 件
			l	L	L1	L4	CH1	CH3	CH2	ØF	ØN	订货型号		CH2	ØF	ØN	l	订货型号	
轻型 L	6	315	8	27	12	34.5	14	12	14	1/8"	14	TN 415 - 6 LR	7.1	14	10 × 1	14	8	TN 415 - 6 LM	7.2
	8		12	29	14	37.5	17	12	19	1/4"	19	TN 415 - 8 LR	10.6	17	12 × 1.5	17	12	TN 415 - 8 LM	10.0
	10		12	30	15	40	19	14	19	1/4"	19	TN 415 - 10 LR	13.0	19	14 × 1.5	19	12	TN 415 - 10 LM	13.0
	12		12	32	17	42	22	17	22	3/8"	22	TN 415 - 12 LR	17.5	22	16 × 1.5	22	12	TN 415 - 12 LM	17.5
	15		14	36	21	46	27	19	27	1/2"	27	TN 415 - 15 LR	30.5	24	18 × 1.5	24	12	TN 415 - 15 LM	28.3
	18		14	40	23.5	50	32	24	27	1/2"	27	TN 415 - 18 LR	40.3	27	22 × 1.5	27	14	TN 415 - 18 LM	40.5
	22	160	16	44	27.5	55	36	27	32	3/4"	32	TN 415 - 22 LR	55.0	32	26 × 1.5	32	16	TN 415 - 22 LM	55.0
	28		18	47	30.5	59	41	36	41	1"	40	TN 415 - 28 LR	87.0	41	33 × 2	40	18	TN 415 - 28 LM	87.0
	35		20	56	34.5	68.5	50	41	50	1"1/4	50	TN 415 - 35 LR	123.5	50	42 × 2	50	20	TN 415 - 35 LM	124.0
	42		22	63	40	75	60	50	55	1"1/2	55	TN 415 - 42 LR	181.0	55	48 × 2	55	22	TN 415 - 42 LM	182.0
重型 S	6	630	12	31	16	40	17	12	19	1/4"	19	TN 415 - 6 SR	12.2	17	12 × 1.5	17	12	TN 415 - 6 SM	11.5
	8		12	32	17	42.5	19	14	19	1/4"	19	TN 415 - 8 SR	16.0	19	14 × 1.5	19	12	TN 415 - 8 SM	16.0
	10		12	34	17.5	45	22	17	22	3/8"	22	TN 415 - 10 SR	22.0	22	16 × 1.5	22	12	TN 415 - 10 SM	21.7
	12		12	38	21.5	48	24	17	22	3/8"	22	TN 415 - 12 SR	27.0	24	18 × 1.5	24	12	TN 415 - 12 SM	28.0
	14		14	40	22	54	27	19	27	1/2"	27	TN 415 - 14 SR	37.7	27	20 × 1.5	26	14	TN 415 - 14 SM	37.5
	16	400	14	43	24.5	55	30	24	27	1/2"	27	TN 415 - 16 SR	45.5	27	22 × 1.5	27	14	TN 415 - 16 SM	47.0
	20		16	48	26.5	65	36	27	32	3/4"	32	TN 415 - 20 SR	72.0	32	27 × 2	32	16	TN 415 - 20 SM	72.0
	25		18	54	30	73	46	36	41	1"	40	TN 415 - 25 SR	134.5	41	33 × 2	40	18	TN 415 - 25 SM	134.5
	30		20	62	35.5	78.5	50	41	50	1"1/4	50	TN 415 - 30 SR	178.0	50	42 × 2	50	20	TN 415 - 30 SM	178.5
	38	315	22	72	41	89	60	50	55	1"1/2	55	TN 415 - 38 SR	260.0	55	48 × 2	55	22	TN 415 - 38 SM	260.5

Overall sizes are with closed fitting.

总长为预安装后的长度。

Temperature range without pressure reductions with connections fitted with O-Ring and seals in NBR (standard) and FPM (to order):

NBR (Perbunan): from -35 to +100℃ - FPM (Viton): from -25 to +120℃

适合带橡胶垫的零件工作温度范围：NBR 丁晴橡胶 -35° 至 +100℃，PM (Viton): 氟橡胶 -25 t 至 +120℃

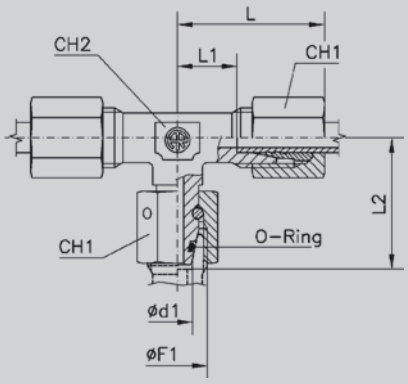

TN 420

Rotary fitting a Tees with O-Ring Seal

可调式三通管接头（不带接头体），锥体带O型圈

系列	Ø 钢管外径 d_1	公称压力 PN	尺寸						O 型圈尺寸	订货型号	重量 kg./100 件
			L	L1	L2	Ø F1	CH1	CH2			
轻型 L	6	315	27	12	26	12 × 1.5	14	12	4 × 1.5	TN 420 - 6 L	5.8
	8		29	14	27.5	14 × 1.5	17	12	6 × 1.5	TN 420 - 8 L	7.9
	10		30	15	29	16 × 1.5	19	14	7.5 × 1.5	TN 420 - 10 L	10.0
	12		32	17	29.5	18 × 1.5	22	17	9 × 1.5	TN 420 - 12 L	13.5
	15		36	21	32.5	22 × 1.5	27	19	12 × 2	TN 420 - 15 L	23.3
	18		40	23.5	35.5	26 × 1.5	32	24	15 × 2	TN 420 - 18 L	32.2
	22	160	44	27.5	38.5	30 × 2	36	27	20 × 2	TN 420 - 22 L	44.5
	28		47	30.5	41.5	36 × 2	41	36	26 × 2	TN 420 - 28 L	70.0
	35		56	34.5	51	45 × 2	50	41	32 × 2.5	TN 420 - 35 L	96.0
	42		63	40	56	52 × 2	60	50	38 × 2.5	TN 420 - 42 L	146.0
重型 S	6	630	31	16	27	14 × 1.5	17	12	4 × 1.5	TN 420 - 6 S	8.7
	8		32	17	27.5	16 × 1.5	19	14	6 × 1.5	TN 420 - 8 S	11.8
	10		34	17.5	30	18 × 1.5	22	17	7.5 × 1.5	TN 420 - 10 S	16.3
	12		38	21.5	31	20 × 1.5	24	17	9 × 1.5	TN 420 - 12 S	20.5
	14		40	22	35	22 × 1.5	27	19	10 × 2	TN 420 - 14 S	28.0
	16	400	43	24.5	36.5	24 × 1.5	30	24	12 × 2	TN 420 - 16 S	37.3
	20		48	26.5	44.5	30 × 2	36	27	16.3 × 2.4	TN 420 - 20 S	57.0
	25		54	30	50	36 × 2	46	36	20.3 × 2.4	TN 420 - 25 S	108.0
	30		62	35.5	55	42 × 2	50	41	25.3 × 2.4	TN 420 - 30 S	136.5
	38	315	72	41	63	52 × 2	60	50	33.3 × 2.4	TN 420 - 38 S	203.5

Overall sizes are with closed fitting.

总长为预安装后的长度。

* Temperature range without pressure reductions with connections fitted with O-Ring in NBR (standard) and FPM (to order): NBR (Perbunan): from -35 to +100℃ - FPM (Viton): from -25 to +120℃

适合带橡胶垫的零件工作温度范围：NBR 丁晴橡胶 -35° 至 +100℃，PM (Viton): 氟橡胶 -25 t 至 +120℃

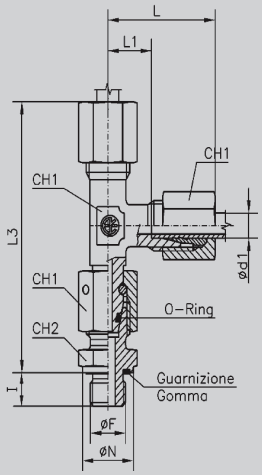

TN 416

Swivel Barrel Tees with O-Ring Seal

可调式L型管接头（带接头体）

可连接螺纹形式：英制圆柱螺纹

公制圆柱螺纹

密封形式：DIN 3852第十一部分的带弹性密封体结构

系列	Ø 钢管外径 d_1	公称压力 PN	尺寸						R				重量 kg./100 件	M					重量 kg./100 件
			l	L	L1	L3	CH1	CH3	CH2	ØF	ØN	订货型号		CH2	ØF	ØN	l	订货型号	
轻型 L	6	315	8	27	12	61.5	14	12	14	1/8”	14	TN 416 - 6 LR	7.1	14	10 × 1	14	8	TN 416 - 6 LM	7.0
	8		12	29	14	66.5	17	12	19	1/4”	19	TN 416 - 8 LR	10.5	17	12 × 1.5	17	12	TN 416 - 8 LM	10.0
	10		12	30	15	70	19	14	19	1/4”	19	TN 416 - 10 LR	12.7	19	14 × 1.5	19	12	TN 416 - 10 LM	12.7
	12		12	32	17	74	22	17	22	3/8”	22	TN 416 - 12 LR	17.5	22	16 × 1.5	22	12	TN 416 - 12 LM	17.5
	15		14	36	21	82	27	19	27	1/2”	27	TN 416 - 15 LR	30.5	24	18 × 1.5	24	12	TN 416 - 15 LM	28.3
	18		14	40	23.5	90	32	24	27	1/2”	27	TN 416 - 18 LR	40.3	27	22 × 1.5	27	14	TN 416 - 18 LM	40.5
	22	160	16	44	27.5	99	36	27	32	3/4”	32	TN 416 - 22 LR	54.5	32	26 × 1.5	32	16	TN 416 - 22 LM	54.5
	28		18	47	30.5	106	41	36	41	1”	40	TN 416 - 28 LR	87.2	41	33 × 2	40	18	TN 416 - 28 LM	87.0
	35		20	56	34.5	124.5	50	41	50	1”1/4	50	TN 416 - 35 LR	121.5	50	42 × 2	50	20	TN 416 - 35 LM	121.5
	42		22	63	40	138	60	50	55	1”1/2	55	TN 416 - 42 LR	180.5	55	48 × 2	55	22	TN 416 - 42 LM	182.0
重型 S	6	630	12	31	16	71	17	12	19	1/4”	19	TN 416 - 6 SR	12.6	17	12 × 1.5	17	12	TN 416 - 6 SM	12.0
	8		12	32	17	74.5	19	14	19	1/4”	19	TN 416 - 8 SR	16.0	19	14 × 1.5	19	12	TN 416 - 8 SM	16.0
	10		12	34	17.5	79	22	17	22	3/8”	22	TN 416 - 10 SR	22.0	22	16 × 1.5	22	12	TN 416 - 10 SM	21.8
	12		12	38	21.5	86	24	17	22	3/8”	22	TN 416 - 12 SR	27.0	24	18 × 1.5	24	12	TN 416 - 12 SM	27.8
	14		14	40	22	94	27	19	27	1/2”	27	TN 416 - 14 SR	37.7	27	20 × 1.5	26	14	TN 416 - 14 SM	37.5
	16	400	14	43	24.5	98	30	24	27	1/2”	27	TN 416 - 16 SR	47.5	27	22 × 1.5	27	14	TN 416 - 16 SM	48.0
	20		16	48	26.5	113	36	27	32	3/4”	32	TN 416 - 20 SR	73.0	32	27 × 2	32	16	TN 416 - 20 SM	73.5
	25		18	54	30	127	46	36	41	1”	40	TN 416 - 25 SR	134.5	41	33 × 2	40	18	TN 416 - 25 SM	134.5
	30		20	62	35.5	140.5	50	41	50	1”1/4	50	TN 416 - 30 SR	180.0	50	42 × 2	50	20	TN 416 - 30 SM	180.0
	38	315	22	72	41	161	60	50	55	1”1/2	55	TN 416 - 38 SR	261.5	55	48 × 2	55	22	TN 416 - 38 SM	262.0

Overall sizes are with closed fitting.

总长为预安装后的长度。

Temperature range without pressure reductions with connections fitted with O-Ring and seals in NBR (standard) and FPM (to order): NBR (Perbunan): from -35 to +100℃ - FPM (Viton): from -25 to +120℃

适合带橡胶垫的零件工作温度范围：NBR 丁晴橡胶 -35° 至 +100℃，PM (Viton): 氟橡胶 -25 至 +120℃

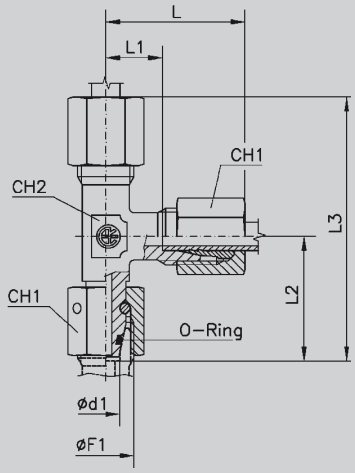

TN 421

Rotary fitting a L with O-Ring Seal

可调式L型管接头(不带接头体)，锥体带O型圈

系列	Ø 钢管外径 d_1	公称压力 PN	尺寸							O 型圈尺寸	订货型号	重量 kg./100 件
			L	L1	L2	L3	Ø F1	CH1	CH2			
轻型 L	6	315	27	12	26	53	12 × 1.5	14	12	4 × 1.5	TN 421 - 6 L	5.8
	8		29	14	27.5	56	14 × 1.5	17	12	6 × 1.5	TN 421 - 8 L	7.9
	10		30	15	29	59	16 × 1.5	19	14	7.5 × 1.5	TN 421 - 10 L	10.0
	12		32	17	29.5	61	18 × 1.5	22	17	9 × 1.5	TN 421 - 12 L	13.5
	15		36	21	32.5	69	22 × 1.5	27	19	12 × 2	TN 421 - 15 L	23.3
	18		40	23.5	35.5	75	26 × 1.5	32	24	15 × 2	TN 421 - 18 L	32.2
	22	160	44	27.5	38.5	82	30 × 2	36	27	20 × 2	TN 421 - 22 L	44.3
	28		47	30.5	41.5	89	36 × 2	41	36	26 × 2	TN 421 - 28 L	70.0
	35		56	34.5	51	107	45 × 2	50	41	32 × 2.5	TN 421 - 35 L	94.5
	42		63	40	56	119	52 × 2	60	50	38 × 2.5	TN 421 - 42 L	146.5
重型 S	6	630	31	16	27	58	14 × 1.5	17	12	4 × 1.5	TN 421 - 6 S	9.0
	8		32	17	27.5	59	16 × 1.5	19	14	6 × 1.5	TN 421 - 8 S	11.8
	10		34	17.5	30	64	18 × 1.5	22	17	7.5 × 1.5	TN 421 - 10 S	16.5
	12		38	21.5	31	69	20 × 1.5	24	17	9 × 1.5	TN 421 - 12 S	20.7
	14		40	22	35	75	22 × 1.5	27	19	10 × 2	TN 421 - 14 S	28.0
	16	400	43	24.5	36.5	79	24 × 1.5	30	24	12 × 2	TN 421 - 16 S	38.2
	20		48	26.5	44.5	93	30 × 2	36	27	16.3 × 2.4	TN 421 - 20 S	58.3
	25		54	30	50	104	36 × 2	46	36	20.3 × 2.4	TN 421 - 25 S	108.0
	30		62	35.5	55	117	42 × 2	50	41	25.3 × 2.4	TN 421 - 30 S	138.0
	38	315	72	41	63	135	52 × 2	60	50	33.3 × 2.4	TN 421 - 38 S	205.0

Overall sizes are with closed fitting.
总长为预安装后的长度。

* Temperature range without pressure reductions with connections fitted with O-Rings in NBR (standard) and FPM (to order):
NBR (Perbunan): from -35 to +100℃ - FPM (Viton): from -25 to +120℃
适合带橡胶垫的零件工作温度范围：NBR 丁晴橡胶 -35° 至 +100℃，PM (Viton): 氟橡胶 -25 至 +120℃

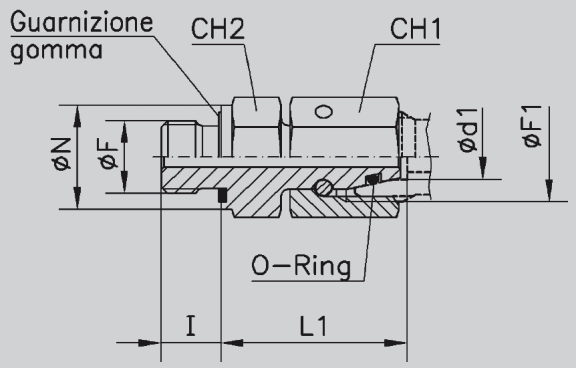

TN 426 R

Stud / Standpipe Adaptors Packing ring / O-Ring Seal
可调式直通接头
可连接螺纹形式：英制圆柱螺纹
密封形式：DIN 3852第十一部分的
带弹性密封体结构

系列	Ø 钢管外径 d_1	公称压力 PN	尺寸							O 型圈尺寸	订货型号	重量 kg./100 件
			L1	Ø F	I	CH2	Ø N	Ø F1	CH1			
轻型 L	6	315	24.5	1/8"	8	14	14	12 × 1.5	14	4 × 1.5	TN 426 - 6 LR	2.5
	8		29.5	1/4"	12	19	19	14 × 1.5	17	6 × 1.5	TN 426 - 8 LR	4.3
	10		27.5	1/4"	12	19	19	16 × 1.5	19	7.5 × 1.5	TN 426 - 10 LR	4.8
	12		34	3/8"	12	22	22	18 × 1.5	22	9 × 1.5	TN 426 - 12 LR	6.9
	15		32	1/2"	14	27	27	22 × 1.5	27	12 × 2	TN 426 - 15 LR	12.0
	18		31.5	1/2"	14	27	27	26 × 1.5	32	15 × 2	TN 426 - 18 LR	13.5
	22	160	32.5	3/4"	16	32	32	30 × 2	36	20 × 2	TN 426 - 22 LR	19.5
	28		35	1"	18	41	40	36 × 2	41	26 × 2	TN 426 - 28 LR	36
	35		42.5	1"1/4	20	50	50	45 × 2	50	32 × 2.5	TN 426 - 35 LR	45.5
	42		46.5	1"1/2	22	55	55	52 × 2	60	38 × 2.5	TN 426 - 42 LR	66.0
重型 S	6	630	27	1/4"	12	19	19	14 × 1.5	17	4 × 1.5	TN 426 - 6 SR	4.5
	8		29.5	1/4"	12	19	19	16 × 1.5	19	6 × 1.5	TN 426 - 8 SR	5.0
	10		32	3/8"	12	22	22	18 × 1.5	22	7.5 × 1.5	TN 426 - 10 SR	7.5
	12		34	3/8"	12	22	22	20 × 1.5	24	9 × 1.5	TN 426 - 12 SR	8.2
	14		36.5	1/2"	14	27	27	22 × 1.5	27	10 × 2	TN 426 - 14 SR	12.5
	16	400	37	1/2"	14	27	27	24 × 1.5	30	12 × 2	TN 426 - 16 SR	14.5
	20		43	3/4"	16	32	32	30 × 2	36	16.3 × 2.4	TN 426 - 20 SR	22.0
	25		48	1"	18	41	40	36 × 2	46	20.3 × 2.4	TN 426 - 25 SR	40.0
	30		51	1"1/4	20	50	50	42 × 2	50	25.3 × 2.4	TN 426 - 30 SR	58.0
	38	315	60	1"1/2	22	55	55	52 × 2	60	33.3 × 2.4	TN 426 - 38 SR	78.5

Overall sizes are with closed fitting.
总长为预安装后的长度。

* Temperature range without pressure reductions with connections fitted with O-Ring and seals in NBR (standard) and FPM (to order):

NBR (Perbunan): from -35 to +100℃ - FPM (Viton): from -25 to +120℃
适合带橡胶垫的零件工作温度范围：NBR 丁晴橡胶 -35° 至 +100℃，PM (Viton): 氟橡胶 -25 至 +120℃

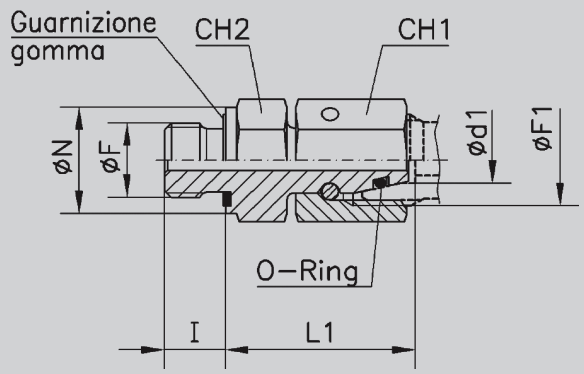

TN 426 M

Stud/Standpipe Adaptors Packingring / O-Ring Seal

可调式直通接头，锥体带O型圈

可连接螺纹形式：公制圆柱螺纹

密封形式：DIN 3852第十一部分的带弹性密封体结构

系列	Ø 钢管外径 d_1	公称压力 PN	尺寸							O 型圈尺寸	订货型号	重量 kg./100 件
			L1	Ø F	I	CH2	Ø N	Ø F1	CH1			
轻型 L	6	315	24.5	10 × 1	8	14	14	12 × 1.5	14	4 × 1.5	TN 426 - 6 LM	2.5
	8		26.5	12 × 1.5	12	17	17	14 × 1.5	17	6 × 1.5	TN 426- 8 LM	3.8
	10		27.5	14 × 1.5	12	19	19	16 × 1.5	19	7.5 × 1.5	TN 426 - 10 LM	4.8
	12		30.5	16 × 1.5	12	22	22	18 × 1.5	22	9 × 1.5	TN 426 - 12 LM	6.7
	15		31.5	18 × 1.5	12	24	24	22 × 1.5	27	12 × 2	TN 426 - 15 LM	10.0
	18		31.5	22 × 1.5	14	27	27	26 × 1.5	32	15 × 2	TN 426 - 18 LM	14.0
	22	160	32.5	26 × 1.5	16	32	32	30 × 2	36	20 × 2	TN 426 - 22 LM	20.0
	28		35	33 × 2	18	41	40	36 × 2	41	26 × 2	TN 426 - 28 LM	36.0
	35		42.5	42 × 2	20	50	50	45 × 2	50	32 × 2.5	TN 426 - 35 LM	45.0
	42		46.5	48 × 2	22	55	55	52 × 2	60	38 × 2.5	TN 426 - 42 LM	71.0
重型 S	6	630	27	12 × 1.5	12	17	17	14 × 1.5	17	4 × 1.5	TN 426 - 6 SM	4.0
	8		29.5	14 × 1.5	12	19	19	16 × 1.5	19	6 × 1.5	TN 426 - 8 SM	5.0
	10		32	16 × 1.5	12	22	22	18 × 1.5	22	7.5 × 1.5	TN 426 - 10 SM	7.0
	12		34	18 × 1.5	12	24	24	20 × 1.5	24	9 × 1.5	TN 426 - 12 SM	9.0
	14		36.5	20 × 1.5	14	27	26	22 × 1.5	27	10 × 2	TN 426 - 14 SM	12.0
	16	400	37	22 × 1.5	14	27	27	24 × 1.5	30	12 × 2	TN 426 - 16 SM	15.0
	20		43	27 × 2	16	32	32	30 × 2	36	16.3 × 2.4	TN 426 - 20 SM	22.3
	25		48	33 × 2	18	41	40	36 × 2	46	20.3 × 2.4	TN 426 - 25 SM	40.0
	30		51	42 × 2	20	50	50	42 × 2	50	25.3 × 2.4	TN 426 - 30 SM	58.0
	38	315	60	48 × 2	22	55	55	52 × 2	60	33.3 × 2.4	TN 426 - 38 SM	78.0

Overall sizes are with closed fitting.

总长为预安装后的长度。

* Temperature range without pressure reductions with connections fitted with O-Ring and seals in NBR (standard) and FPM (to order):

NBR (Perbunan): from -35 to +100℃ - FPM (Viton): from -25 to +120℃

适合带橡胶垫的零件工作温度范围：NBR 丁晴橡胶 -35° 至 +100℃，PM (Viton): 氟橡胶 -25 至 +120℃

RASTELLI RACCORDI - s.r.l.
I - 27019 VILLANTERIO (PV)

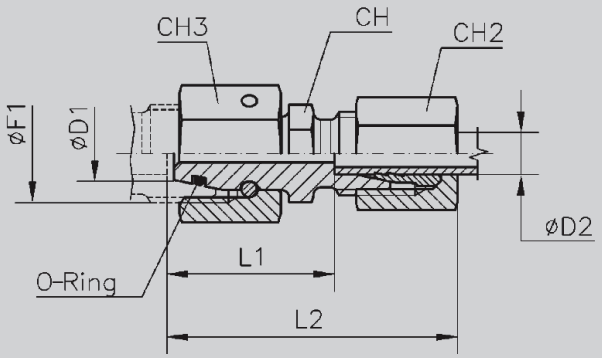

TN 432 L

Standpipe/Tube Reducers ‘L’
Series with O-Ring Seal
变径直通轻型管接头，锥体带O型圈

系列	Ø 钢管外径 D1	Ø 钢管外径 D2	公称压力 PN	尺寸 L1	L2	CH2	CH3	Ø F1	CH	O 型圈尺寸	订货型号	重量 kg./100 件
轻型 L	8	6	315	23.5	38	14	17	14 × 1.5	12	6 × 1.5	TN 432 - 8 / 6 L	4.0
	10	6		25	40	14	19	16 × 1.5	14	7.5 × 1.5	TN 432 - 10 / 6 L	4.8
	10	8		25	40	17	19	16 × 1.5	14	7.5 × 1.5	TN 432 - 10 / 8 L	5.3
	12	6		25	40	14	22	18 × 1.5	17	9 × 1.5	TN 432 - 12 / 6 L	6.2
	12	8		25	40	17	22	18 × 1.5	17	9 × 1.5	TN 432 - 12 / 8 L	6.7
	12	10		26	41	19	22	18 × 1.5	17	9 × 1.5	TN 432 - 12 / 10 L	7.0
	15	6		28.5	43	14	27	22 × 1.5	19	12 × 2	TN 432 - 15 / 6 L	5.5
	15	8		28.5	43	17	27	22 × 1.5	19	12 × 2	TN 432 - 15 / 8 L	9.7
	15	10		29.5	44	19	27	22 × 1.5	19	12 × 2	TN 432 - 15 / 10 L	10.6
	15	12		29.5	44	22	27	22 × 1.5	19	12 × 2	TN 432 - 15 / 12 L	11.0
	18	6		28	43	14	32	26 × 1.5	24	15 × 2	TN 432 - 18 / 6 L	11.8
	18	8		28	43	17	32	26 × 1.5	24	15 × 2	TN 432 - 18 / 8 L	12.4
	18	10		29	44	19	32	26 × 1.5	24	15 × 2	TN 432 - 18 / 10 L	12.7
	18	12		29	44	22	32	26 × 1.5	24	15 × 2	TN 432 - 18 / 12 L	17.1
	18	15		30	45	27	32	26 × 1.5	24	15 × 2	TN 432 - 18 / 15 L	19.1
	22	6	160	32	47	14	36	30 × 2	27	20 × 2	TN 432 - 22 / 6 L	16.8
	22	8		32	47	17	36	30 × 2	27	20 × 2	TN 432 - 22 / 8 L	17.5
	22	10		33	48	19	36	30 × 2	27	20 × 2	TN 432 - 22 / 10 L	17.8
	22	12		33	48	22	36	30 × 2	27	20 × 2	TN 432 - 22 / 12 L	18.5
	22	15		34	49	27	36	30 × 2	27	20 × 2	TN 432 - 22 / 15 L	20.7
	22	18		33.5	50	32	36	30 × 2	27	20 × 2	TN 432 - 22 / 18 L	24.5
	28	6		34	49	14	41	36 × 2	32	26 × 2	TN 432 - 28 / 6 L	29.4
	28	8		34	49	17	41	36 × 2	32	26 × 2	TN 432 - 28 / 8 L	29.4
	28	10		35	50	19	41	36 × 2	32	26 × 2	TN 432 - 28 / 10 L	30.0
	28	12		35	50	22	41	36 × 2	32	26 × 2	TN 432 - 22 / 12 L	30.7
	28	15		36	51	27	41	36 × 2	32	26 × 2	TN 432 - 28 / 15 L	33.0
	28	18		36.5	52	32	41	36 × 2	32	26 × 2	TN 432 - 28 / 18 L	38.2
	28	22		37.5	54	36	41	36 × 2	32	26 × 2	TN 432 - 28 / 22 L	39.0
	35	6		37	52	14	50	45 × 2	41	32 × 2.5	TN 432 - 35 / 6 L	33.3
	35	8		37	52	17	50	45 × 2	41	32 × 2.5	TN 432 - 35 / 8 L	33.8
	35	10		38	53	19	50	45 × 2	41	32 × 2.5	TN 432 - 35 / 10 L	34.3
	35	12		38	53	22	50	45 × 2	41	32 × 2.5	TN 432 - 35 / 12 L	35.3
	35	15		39	54	27	50	45 × 2	41	32 × 2.5	TN 432 - 35 / 15 L	37.0
	35	18		38.5	55	32	50	45 × 2	41	32 × 2.5	TN 432 - 35 / 18 L	39.0
	35	22		40.5	57	36	50	45 × 2	41	32 × 2.5	TN 432 - 35 / 22 L	41.5
	35	28		40.5	57	41	50	45 × 2	41	32 × 2.5	TN 432 - 35 / 28 L	42.5
	42	6		40.5	55	14	60	52 × 2	50	38 × 2.5	TN 432 - 42 / 6 L	51.0
	42	8		40.5	55	17	60	52 × 2	50	38 × 2.5	TN 432 - 42 / 8 L	51.5
	42	10		41.5	56	19	60	52 × 2	50	38 × 2.5	TN 432 - 42 / 10 L	52.5
	42	12		41.5	56	22	60	52 × 2	50	38 × 2.5	TN 432 - 42 / 12 L	53.5
	42	15		42.5	58	27	60	52 × 2	50	38 × 2.5	TN 432 - 42 / 15 L	55.0
	42	18		42	58	32	60	52 × 2	50	38 × 2.5	TN 432 - 42 / 18 L	60.5
	42	22		44	60	36	60	52 × 2	50	38 × 2.5	TN 432 - 42 / 22 L	66.5
	42	28		44	61	41	60	52 × 2	50	38 × 2.5	TN 432 - 42 / 28 L	68.0
	42	35		43	65	50	60	52 × 2	50	38 × 2.5	TN 432 - 42 / 35 L	69.5

Overall sizes are with closed fitting. 总长为预安装后的长度。

* Temperature range without pressure reductions with connections fitted with O-Ring in NBR (standard) and FPM (to order):
NBR (Perbunan): from -35 to +100℃ - FPM (Viton): from -25 to +120℃
适合带橡胶垫的零件工作温度范围：NBR 丁晴橡胶 -35° 至 +100℃，PM (Viton): 氟橡胶 -25 至 +120℃

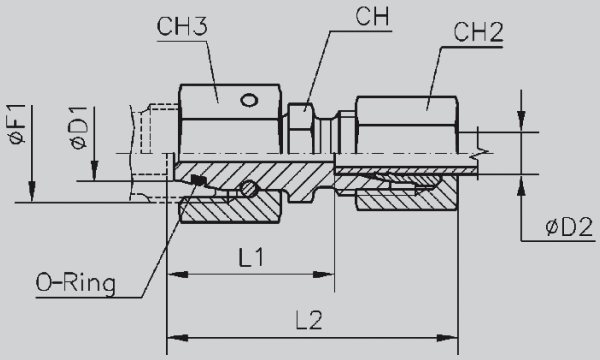

TN 432 S

Standpipe/Tube Reducers ‘S’ Series with O-Ring Seal

变径直通重型接头，锥体带O型圈

系列	Ø 钢管外径 D1	Ø 钢管外径 D2	公称压力 PN	尺寸 L1	L2	CH2	CH3	Ø F1	CH	O 型圈尺寸	订货型号	重量 kg./100 件
重型 S	8	6	630	27	42	17	19	16 × 1.5	14	6 × 1.5	TN 432 - 8 / 6 S	3.5
	10	6		27.5	42	17	22	18 × 1.5	17	7.5 × 1.5	TN 432 - 10 / 6 S	7.1
	10	8		27.5	42	19	22	18 × 1.5	17	7.5 × 1.5	TN 432 - 10 / 8 S	7.7
	12	6		29	44	17	24	20 × 1.5	17	9 × 1.5	TN 432 - 12 / 6 S	8.2
	12	8		29	44	19	24	20 × 1.5	17	9 × 1.5	TN 432 - 12 / 8 S	9.2
	12	10		29.5	46	22	24	20 × 1.5	19	9 × 1.5	TN 432 - 12 / 10 S	10.7
	14	6		31.5	46	17	27	22 × 1.5	19	10 × 2	TN 432 - 14 / 6 S	9.1
	14	8		31.5	46	19	27	22 × 1.5	19	10 × 2	TN 432 - 14 / 8 S	10.0
	14	10		31	47	22	27	22 × 1.5	19	10 × 2	TN 432 - 14 / 10 S	11.0
	14	12		31	47	24	27	22 × 1.5	22	10 × 2	TN 432 - 14 / 12 S	12.0
	16	6	400	32	47	17	30	24 × 1.5	22	12 × 2	TN 432 - 16 / 6 S	12.6
	16	8		32	47	19	30	24 × 1.5	22	12 × 2	TN 432 - 16 / 8 S	14.7
	16	10		31.5	48	22	30	24 × 1.5	22	12 × 2	TN 432 - 16 / 10 S	14.7
	16	12		31.5	48	24	30	24 × 1.5	22	12 × 2	TN 432 - 16 / 12 S	15.5
	16	14		33	51	27	30	24 × 1.5	24	12 × 2	TN 432 - 16 / 14 S	16.5
	20	6		36	51	17	36	30 × 2	27	16.3 × 2.4	TN 432 - 20 / 6 S	19.0
	20	8		36	51	19	36	30 × 2	27	16.3 × 2.4	TN 432 - 20 / 8 S	20.5
	20	10		35.5	52	22	36	30 × 2	27	16.3 × 2.4	TN 432 - 20 / 10 S	20.5
	20	12		35.5	52	24	36	30 × 2	27	16.3 × 2.4	TN 432 - 20 / 12 S	21.5
	20	14		37	55	27	36	30 × 2	27	16.3 × 2.4	TN 432 - 20 / 14 S	23.5
	20	16		36.5	55	30	36	30 × 2	27	16.3 × 2.4	TN 432 - 20 / 16 S	26.0
	25	6		38.5	53	17	46	36 × 2	32	20.3 × 2.4	TN 432 - 25 / 6 S	31.0
	25	8		38.5	53	19	46	36 × 2	32	20.3 × 2.4	TN 432 - 25 / 8 S	32.0
	25	10		38	54	22	46	36 × 2	32	20.3 × 2.4	TN 432 - 25 / 10 S	33.5
	25	12		38	54	24	46	36 × 2	32	20.3 × 2.4	TN 432 - 25 / 12 S	33.5
	25	14		39.5	57	27	46	36 × 2	32	20.3 × 2.4	TN 432 - 25 / 14 S	35.0
	25	16		39	57	30	46	36 × 2	32	20.3 × 2.4	TN 432 - 25 / 16 S	37.5
	25	20		39	61	36	46	36 × 2	32	20.3 × 2.4	TN 432 - 25 / 20 S	43.5
	30	6		44	59	17	50	42 × 2	41	25.3 × 2.4	TN 432 - 30 / 6 S	43.0
	30	8		44	59	19	50	42 × 2	41	25.3 × 2.4	TN 432 - 30 / 8 S	43.0
	30	10		43.5	60	22	50	42 × 2	41	25.3 × 2.4	TN 432 - 30 / 10 S	43.5
	30	12		43.5	60	24	50	42 × 2	41	25.3 × 2.4	TN 432 - 30 / 12 S	44.5
	30	14		45	63	27	50	42 × 2	41	25.3 × 2.4	TN 432 - 30 / 14 S	46.0
	30	16		44.5	63	30	50	42 × 2	41	25.3 × 2.4	TN 432 - 30 / 16 S	48.8
	30	20		44.5	66	36	50	42 × 2	41	25.3 × 2.4	TN 432 - 30 / 20 S	53.5
	30	25		45	69	46	50	42 × 2	41	25.3 × 2.4	TN 432 - 30 / 25 S	67.5
	38	6	315	47.5	62	17	60	52 × 2	50	33.3 × 2.4	TN 432 - 38 / 6 S	71.0
	38	8		47.5	62	19	60	52 × 2	50	33.3 × 2.4	TN 432 - 38 / 8 S	71.0
	38	10		47	63	22	60	52 × 2	50	33.3 × 2.4	TN 432 - 38 / 10 S	71.5
	38	12		47	63	24	60	52 × 2	50	33.3 × 2.4	TN 432 - 38 / 12 S	72.0
	38	14		48.5	66	27	60	52 × 2	50	33.3 × 2.4	TN 432 - 38 / 14 S	74.5
	38	16		48	66	30	60	52 × 2	50	33.3 × 2.4	TN 432 - 38 / 16 S	77.0
	38	20		48	70	36	60	52 × 2	50	33.3 × 2.4	TN 432 - 38 / 20 S	81.0
	38	25		48.5	73	46	60	52 × 2	50	33.3 × 2.4	TN 432 - 38 / 25 S	85.0
	38	30		49	76	50	60	52 × 2	50	33.3 × 2.4	TN 432 - 38 / 30 S	88.0

Overall sizes are with closed fitting. 总长为预安装后的长度。

* Temperature range without pressure reductions with connections fitted with O-Ring in NBR (standard) and FPM (to order):
NBR (Perbunan): from -35 to +100℃ - FPM (Viton): from -25 to +120℃
适合带橡胶垫的零件工作温度范围：NBR 丁晴橡胶 -35° 至 +100℃，PM (Viton): 氟橡胶 -25 至 +120℃

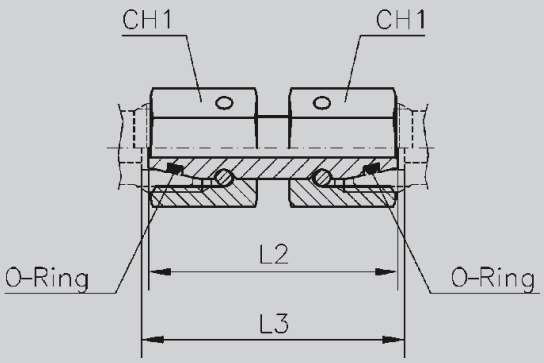

TN 498

Straight coupling with O-Ring
可调式变径直通接头

系列	Ø 钢管外径 d_1	公称压力 PN	尺寸			O 型圈尺寸		订货型号	重量 kg./100 件
			L2	L3	CH1				
轻型 L	6	315	34	35	14	4 × 1.5		TN 498 - 6 L	2.8
	8		34	35	17	6 × 1.5		TN 498 - 8 L	4.3
	10		36	37	19	7.5 × 1.5		TN 498 - 10 L	5.5
	12		36	37	22	9 × 1.5		TN 498 - 12 L	7.3
	15		39	40	27	12 × 2		TN 498 - 15 L	13.1
	18		40.5	41.5	32	15 × 2		TN 498 - 18 L	17.6
	22	160	45	46	36	20 × 2		TN 498 - 22 L	28.5
	28		47	48	41	26 × 2		TN 498 - 28 L	32.8
	35		53	56	50	32 × 2.5		TN 498 - 35 L	47.8
	42		53	57	60	38 × 2.5		TN 498 - 42 L	78.3
重型 S	6	630	37	38	17	4 × 1.5		TN 498 - 6 S	4.3
	8		37	38	19	6 × 1.5		TN 498 - 8 S	5.7
	10		41	43	22	7.5 × 1.5		TN 498 - 10 S	8.0
	12		42	44	24	9 × 1.5		TN 498 - 12 S	9.8
	14		45	48	27	10 × 2		TN 498 - 14 S	14.1
	16	400	46	49	30	12 × 2		TN 498 - 16 S	17.8
	20		55	59	36	16.3 × 2.4		TN 498 - 20 S	29.1
	25		58	65	46	20.3 × 2.4		TN 498 - 25 S	53.1
	30		62	71	50	25.3 × 2.4		TN 498 - 30 S	65.8
	38	315	67	82	60	33.3 × 2.4		TN 498 - 38 S	93.9

Overall sizes are with closed fitting.
总长为预安装后的长度。

* Temperature range without pressure reductions with connections fitted with O-Ring in NBR (standard) and FPM (to order):
NBR (Perbunan): from -35 to +100℃ - FPM (Viton): from -25 to +120℃
适合带橡胶垫的零件工作温度范围：NBR 丁晴橡胶 -35° 至 +100℃，PM (Viton): 氟橡胶 -25 至 +120℃

Minor change in cross section
negligible pressure loss
taper to DIN 3865
appropriate for extreme load
conditions
low tightening torque
high tensile safety
high pressure strenght
high degree of sealing efficacy due to
additional O-Ring seal

可调式卡套式接头特点:
流通截面减小
DIN3865 标准的锥体适合极端负载条件
低旋紧扭矩
高强度安全和高压强度
O 型圈密封提供更可靠的密封性

CONNECTION TO THE BODY OF THE UNION
安装指南

(1) Oil the thread of the nut TN 400. O-Ring s eal and the thread of the union.
在 TN400 的螺母螺纹，O 型圈，接头体螺纹都涂上润滑剂
(2) Insert the taperes 24° of TN 400 into the tapered seat 24° of the union and fully tighten the nut TN 400 by hand.
把 TN400 螺母的 24° 螺纹与接头体的 24° 锥对口接入，用于拧紧螺母 TN400
(3) Tighten the nut TN 400 by ¼ to ½ turn
用扳手再拧紧 ¼ 到 ½ 圈

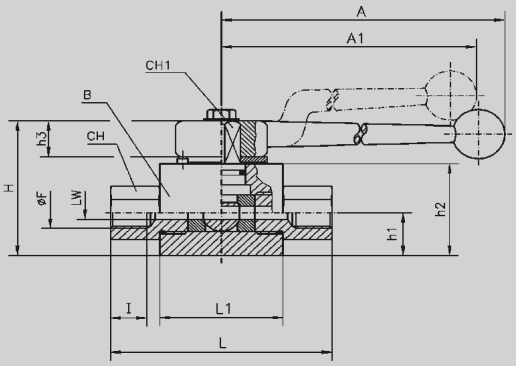

TN KHB / KHM

Ball valve robinet

球阀

可连接螺纹形式：英制圆柱螺纹

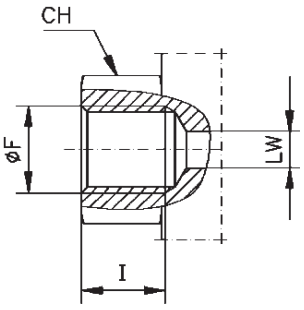

Ø DN	LW	PE (BAR)	Ø F	H	h1	h2	h3	B	L	I	L1	A	A1	CH1	CH	订货型号	重量 kg./100 件
4	6	500	1/8"	48	13	30	8	25	69	10	35	85	76	9	19	TN KHB - 4 G 1/8"	0.29
6	6	500	1/4"	48	13	30	8	25	69	14	35	85	76	9	22	TN KHB - 6 G 1/4"	0.32
10	10	500	3/8"	53	17	40	8	32	72	14	42	150	139	9	27	TN KHB - 10 G 3/8"	0.46
13	12	500	1/2"	53	17	40	8	35	83	16	47	150	139	9	30	TN KHB - 13 G 1/2"	0.59
16	15	400	1/2"	62	19	45	11	38	83	16	47	175	163	12	32	TN KHB - 16 G 1/2"	0.70
20	20	315	3/4"	75	24.5	57	11	48	95	18	60	200	183	14	41	TN KHB - 20 G 3/4"	1.30
25	25	315	1"	82	28.5	64	11	57	113	20.5	65	200	183	14	50	TN KHB - 25 G 1"	2.03
25	25	315	1"	84	30	65.5	14	60	113	20.5	63	200	183	14	50	TN KHM - 25 G 1" *	1.75
32	25	315	1"1/4	82	28.5	64	14	57	110	22	65	200	183	14	50	TN KHB - 32/25 G 1" 1/4 *	2.10
32	25	315	1"1/4	84	30	65.5	14	60	110	22	63	200	183	14	50	TN KHM - 32/25 G 1" 1/4 *	1.85
32	30	315	1"1/4	103	37.5	84	12	75	110	22	84	240	220	17	60	TN KHM - 32G 1" 1/4	3.10
40	38	315	1"1/2	114	42.5	95	12	85	130	24	91	240	220	17	70	TN KHM - 40G 1" 1/2	4.40
50	48	315	2"	131	52.5	113	12	105	140	26	100	240	220	17	80	TN KHM - 50 G 2"	6.60

AVAILABLE WHILE STOCKS LAST

库存量随订单而变化，交期另行通知

Allowable working temperature -10℃ ÷ +80℃

温度范围 -10℃ ÷ +80℃

TN KHB: BODY OBTAINED FROM DRAWN PIECE

TN KHB: 主体采用冷拔料

TN KHM: BODY OBTAINED FROM FORGED PIECE

TN KHM: 主体采用锻造料

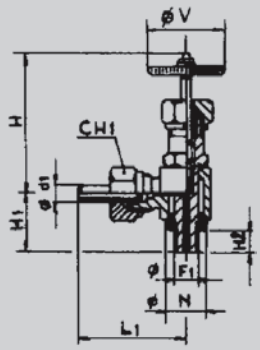

TN 34

TN 34

Pressure gauge taps
压力表开关

ROTARY WITH RING COUPLING TN 87											
Ø 钢管外径 d_1	公称压力 PE	尺寸								订货型号	重量 kg./100 件
		L1	H	H1	H2	F1	N	Ø V	CH1		
10	400	62.5	75	33	14	3/8”	21.5	45	22	TN 34 - 10 S	0.550
12		62.5	75	33	14	3/8”	21.5	45	22	TN 34 - 12 S	0.565

Overall sizes are with closed fitting.
总长为预安装后的长度。

TN 500

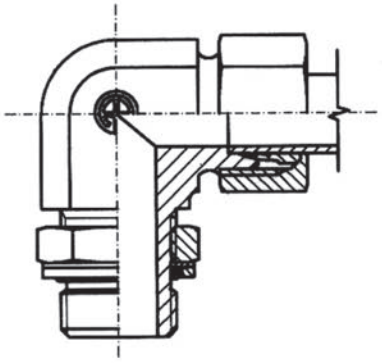

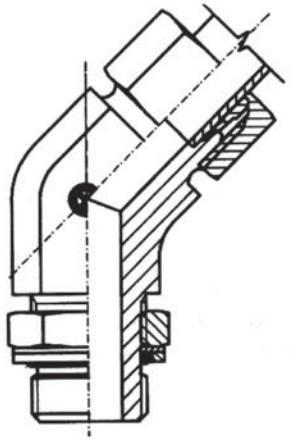

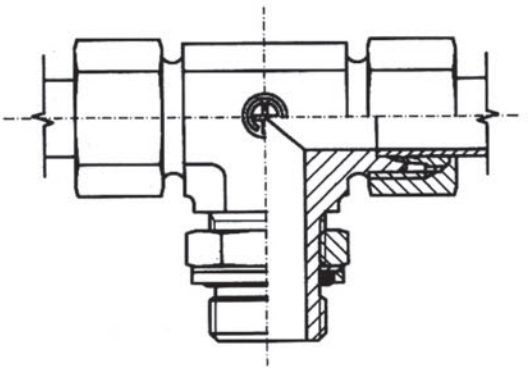

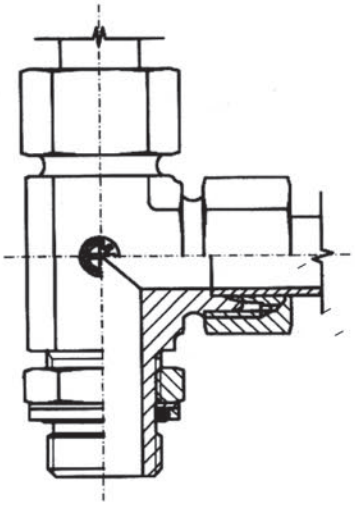

rotaries fittings with bulkhead nut

带防松螺母的可调向接头

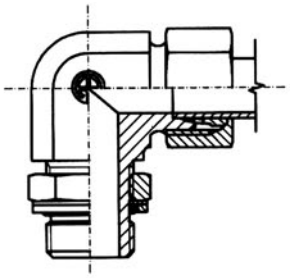

TN 514 R
TN 514 UNF/UN
TN 514 M
TN 514 W-M

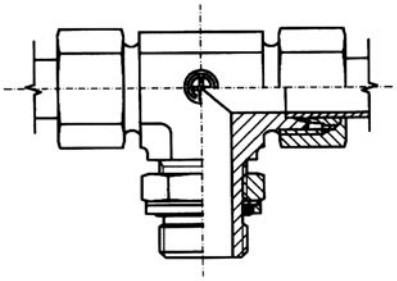

TN 515 R
TN 515 UNF/UN
TN 515 M
TN 515 W-M

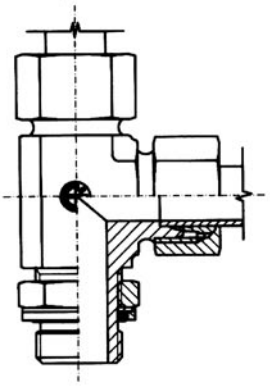

TN 516 R
TN 516 UNF/UN
TN 516 M
TN 516 W-M

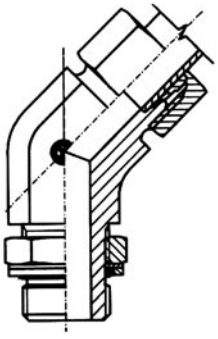

TN 517 R
TN 517 UNF/UN
TN 517 M
TN 517 W-M

TYPES OF THREAD FOR TN 500 COUPLINGS
TN500 接头的适配螺纹表

BSPP THREAD (GAS-TYPE CYLINDRICAL) UNI EN ISO 228
UNI EN ISO 228标准英制圆柱螺纹

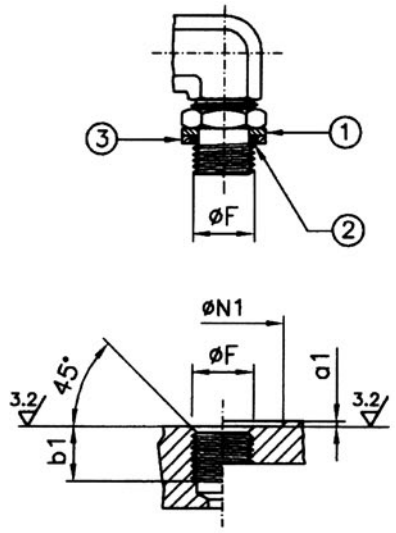

Ø F BSPP	尺寸			O 型圈尺寸
	最大 a1	最小 b1	最小 Ø N1	
1/8" - 28	1.0	8	16.5	7.97 × 1.88
1/4" - 19	1.5	11	21.5	10.77 × 2.62
3/8" - 19	1.5	11	25.5	13.94 × 2.62
1/2" - 14	1.5	14	30.0	17.86 × 2.62
3/4" - 14	1.5	16	36.5	23.47 × 2.62
1" - 11	2.0	19	46.0	29.74 × 3.53
1"1/4 - 11	2.0	21	57.0	37.69 × 3.53
1"1/2 - 11	2.0	21	63.5	44.04 × 3.53

(1) Fixed anti-extrusion ring 挡圈
(2) O-Ring O 型圈
(3) Mobile O-Ring seal ring 垫片

UNF THREAD (ANSI/ASME B 1.1.1989)
ANSI/ASME B 1.1.1989美制UNF螺纹

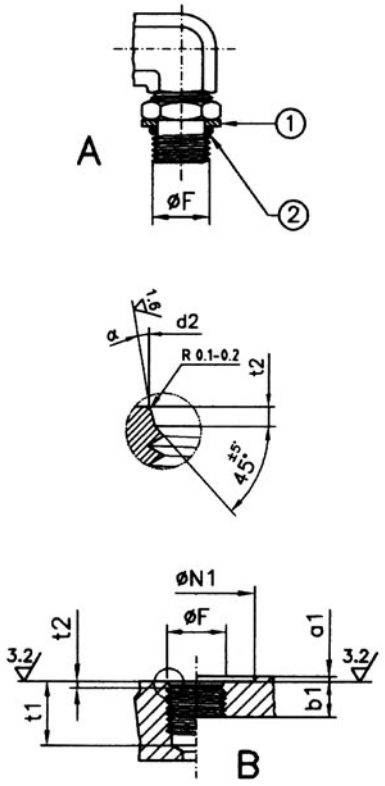

Ø F UNF	尺寸							O 型圈尺寸
	最大 a1	最小 b1	+0.1 d2	最小 Ø N1	最小 t1	+0.3 t2	± 1° α	
7/16 - 20	1.0	12	12.4	21	14	2.4	12°	8.92 × 1.83
9/16 - 18	1.0	13	15.6	26	16	2.5	12°	11.89 × 1.98
3/4 - 16	1.5	15	20.6	32	18	2.6	15°	16.36 × 2.21
7/8 - 14	1.5	17	23.9	35	20	2.6	15°	19.18 × 2.46
1 "1/16 - 12	1.5	20	29.2	42	24	3.3	15°	23.47 × 2.95
1 "5/16 - 12	2.0	20	35.5	50	24	3.3	15°	29.74 × 2.95
1 "5/8 - 12	2.5	20	43.5	60	24	3.4	15°	37.47 × 3.00
1 "7/8 - 12	2.5	20	49.8	65	24	3.4	15°	43.69 × 3.00

(1) Fixed anti-extrusion ring 挡圈
(2) O-Ring O 型圈

A Male stud UNF-2A for O-Ring sealing (SAE J 514)
UNF-2A 外螺纹带 O 型圈 (SAE J 514)
B Port UNF-2B for O-Ring sealing (SAE J 514)
端面适配 UNF-2B 内螺纹带 O 型圈 (SAE J 514)

METRIC CYLINDRICAL THREAD (DIN EN ISO 6149)
DIN EN ISO 6149公制圆柱螺纹表

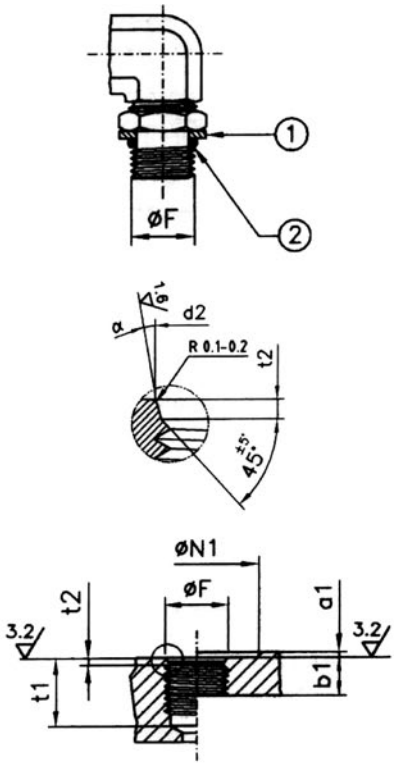

Ø F	尺寸							O 型圈尺寸
	最大 a1	最小 b1	+0.1 d2	最小 Ø N1	最小 t1	+0.4 t2	± 1° α	
10 × 1	1.0	10.0	11.1	20	11.5	1.6	12°	8.1 × 1.6
12 × 1.5	1.5	11.5	13.8	23	14.0	2.4	15°	9.3 × 2.2
14 × 1.5	1.5	11.5	15.8	25	14.0	2.4	15°	11.3 × 2.2
16 × 1.5	1.5	13.0	17.8	28	15.5	2.4	15°	13.3 × 2.2
18 × 1.5	2.0	14.5	19.8	30	17.0	2.4	15°	15.3 × 2.2
22 × 1.5	2.0	15.5	23.8	34	18.0	2.4	15°	19.3 × 2.2
27 × 2	2.0	19.0	29.4	40	22.0	3.1	15°	23.6 × 2.9
33 × 2	2.5	19.0	35.4	49	22.0	3.1	15°	29.6 × 2.9
42 × 2	2.5	19.5	44.4	60	22.5	3.1	15°	38.6 × 2.9
48 × 2	2.5	22.0	50.4	66	25.0	3.1	15°	44.6 × 2.9

(1) Fi×ed anti-e×trusion ring 挡圈
(2) O-Ring O 型圈

-METRIC CYLINDRICAL THREAD
公制圆柱螺纹表

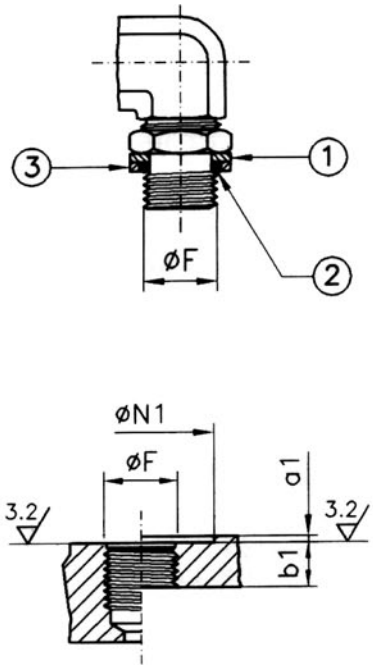

Ø F	尺寸			O 型圈尺寸
	最大 a1	最小 b1	最小 Ø N1	
10 × 1	1.0	8	15	8.1 × 1.6
12 × 1.5	1.5	12	18	9.3 × 2.2
14 × 1.5	1.5	12	20	11.3 × 2.2
16 × 1.5	1.5	12	23	13.3 × 2.2
18 × 1.5	2.0	12	25	15.3 × 2.2
22 × 1.5	2.0	14	28	19.3 × 2.2
27 × 2	2.5	16	33	23.6 × 2.9
33 × 2	2.5	18	41	29.6 × 2.9
42 × 2	2.5	20	51	38.6 × 2.9
48 × 2	2.5	22	56	44.6 × 2.9

(1) Fi×ed anti-e×trusion ring 挡圈
(2) O-RingO 型圈
(3) Mobile O.Ring. seal ring 垫片

ASSEMBLY INSTRUCTIONS
安装指南

A

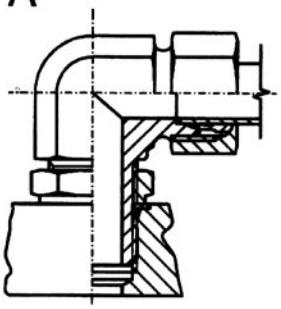

Version with UNF/UN-thread
Metric parallel - thread DIN
EN ISO 6149
DIN EN ISO 6149 公制圆柱螺
纹版本

B

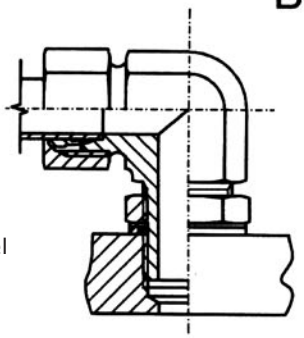

Version with BSP parallel
Cyilindrical thread
英制圆柱螺纹版本

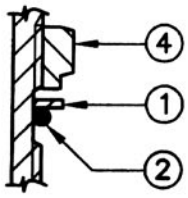

Screw back bulkhead nut ④ as for as it goes.
将锁紧螺母向后旋，如图 4 所示。

O-Ring ② and fixed anti-extrusion ① should be at the upper end of the notch.
将 O 型圈和垫圈放在无螺纹端，尽可能靠近螺母。

Oil the O-Ring.
润滑 O 型圈。

In the versions with BSPP. Metric cylindrical (W) thread slip mobile ring ③ over O-Ring.
英制直螺纹、公制直螺纹放上挡圈以防 O 型圈弹出。

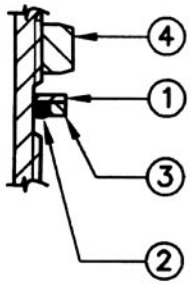

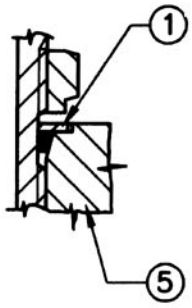

Manually screw the fitting into the screwing hole ⑤ till mobile ring ③ or fixed anti-extrusion ① comes to rest.
用手将接头旋入油口，直到接触挡圈和垫圈的底部。

To adjust in the wanted position turnback by maximum one turn.
如需调整方向，最大反拧一圈。

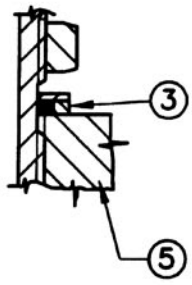

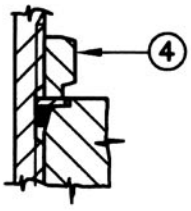

Tighten bulkhead nut ④ completely while keeping the fitting body in the wanted position.
保持接头体在正确的位置，并拧紧锁螺母。

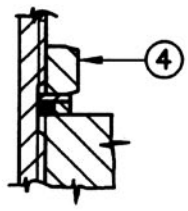

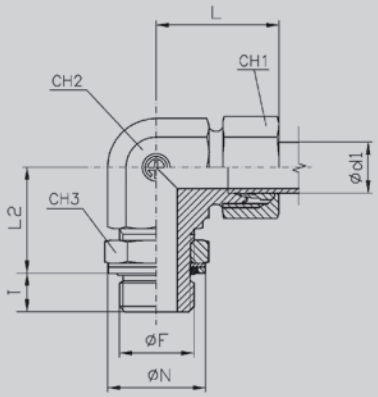

TN 514 R

Angular rotary fitting with bulkhead nut
可调向直角接头
可连接螺纹形式：英制圆柱螺纹

系列	Ø 钢管外径 d_1	公称压力 PN	尺寸 L ≈	L1	L2	I	Ø F	Ø N	CH1	CH2	CH3	订货型号	O 型圈尺寸	重量 kg./100 件
超轻型 LL	4	250	21	11.3	20.7	6.3	1/8"	16	10	11	14	TN 514 - 4 LLR	7.97 × 1.88	3.0
	6		21	11.3	20.7	6.3	1/8"	16	12	11	14	TN 514 - 6 LLR	7.97 × 1.88	3.2
轻型 L	6	315	29	14	20.2	6.3	1/8"	16	14	14	14	TN 514 - 6 LR	7.97 × 1.88	6.5
	8		31	16	22.5	9.5	1/4"	20.5	17	14	19	TN 514 - 8 LR	10.77 × 2.62	6.6
	10		32	17	24.5	9.5	1/4"	20.5	19	19	19	TN 514 - 10 LR	10.77 × 2.62	12.0
	12	250	34	19	27.5	9.5	3/8"	24	22	19	22	TN 514 - 12 LR	13.94 × 2.62	13.8
	15		36	21	30	13	1/2"	29	27	22	27	TN 514 - 15 LR	17.86 × 2.62	28.5
	18		40	24	36.5	13	1/2"	29	32	27	27	TN 514 - 18 LR	17.86 × 2.62	34.5
	22	160	44	28	37.5	13	3/4"	35	36	33	36	TN 514 - 22 LR	23.47 × 2.62	46.3
	28		47	31	41	16	1"	44.5	41	41	41	TN 514 - 28 LR	29.74 × 3.53	68.7
	35		59	38	49	16	1"1/4	53	50	48	50	TN 514 - 35 LR	37.69 × 3.53	109.0
	42		61	38	51	16	1"1/2	58.5	60	48	55	TN 514 - 42 LR	44.04 × 3.53	118.0
重型 S	6	315	30.5	15.5	22.5	9.5	1/4"	20.5	17	14	19	TN 514 - 6 SR	10.77 × 2.62	6.9
	8		33	18	26.5	9.5	1/4"	20.5	19	19	19	TN 514 - 8 SR	10.77 × 2.62	12.2
	10	250	34	18	28.5	9.5	3/8"	24	22	19	22	TN 514 - 10 SR	13.94 × 2.62	13.8
	12		38	22	28.5	9.5	3/8"	24	24	22	22	TN 514 - 12 SR	13.94 × 2.62	20.5
	16		43	25	36	13	1/2"	29	30	27	27	TN 514 - 16 SR	17.86 × 2.62	30.6
	20		49	28	38	13	3/4"	35	36	33	36	TN 514 - 20 SR	23.47 × 2.62	50.0
	25		54.5	30.5	41	16	1"	44.5	46	41	41	TN 514 - 25 SR	29.74 × 3.53	80.7
	30	160	62	36	48	16	1"1/4	53	50	48	50	TN 514 - 30 SR	37.69 × 3.53	105.5
	38		65	34	53	16	1"1/2	58.5	60	48	55	TN 514 - 38 SR	44.04 × 3.53	129.0

Overall sizes are with closed fitting.
总长为预安装后的长度。
* Temperature range without pressure reductions with connections fitted with O-Ring in NBR (standard) and FPM (to order):
NBR (Perbunan): from -35 to +100℃ - FPM (Viton): from -25 to +120℃
适合带橡胶垫的零件工作温度范围：NBR 丁晴橡胶 -35° 至 +100℃，PM (Viton): 氟橡胶 -25 至 +120℃

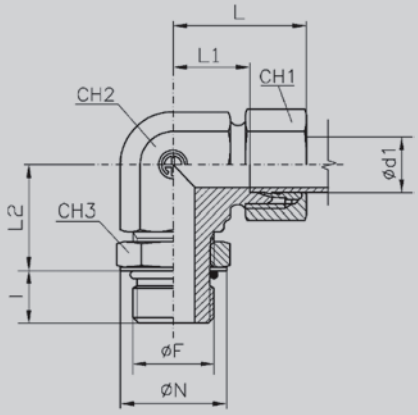

TN 514 UNF/UN

Angular rotary fitting with bulkhead nut
可调向直角接头，带O型圈
可连接螺纹形式：UNF/UN

系列	Ø 钢管外径 d_1	公称压力 PN	尺寸 L ≈	L1	L2	l	Ø F	Ø N	CH1	CH2	CH3	订货型号	O 型圈尺寸	重量 kg./100 件
轻型 L	6	315	29	14	20	9	7/16 - 20 UNF	16.2	14	14	14	TN 514 - 6L - 7/16 - 20 UNF	8.92 × 1.83	6.5
	8		31	16	20	9	7/16 - 20 UNF	16.2	17	14	14	TN 514 – 8L - 7/16 - 20 UNF	8.92 × 1.83	7.1
	10		32	17	24	10	9/16 - 18 UNF	21.2	19	19	17	TN 514 - 10L - 9/16 - 18 UNF	11.89 × 1.98	9.1
	12		34	19	26	10	9/16 - 18 UNF	21.2	22	19	17	TN 514 - 12L - 9/16 - 18 UNF	11.89 × 1.98	10.9
	12		34	19	26.5	11	3/4 - 16 UNF	26.2	22	19	22	TN 514 - 12L - 3/4 - 16 UNF	16.36 × 2.21	19.5
	15		36	21	30	11	3/4 - 16 UNF	26.2	27	22	22	TN 514 - 15L - 3/4 - 16 UNF	16.36 × 2.21	18.5
	15		36	21	30.3	12.7	7/8 - 14 UNF	29.3	27	22	27	TN 514 - 15L - 7/8 - 14 UNF	19.18 × 2.46	19.0
	18		40	24	34.3	12.7	7/8 - 14 UNF	29.3	32	27	27	TN 514 - 18L - 7/8 - 14 UNF	19.18 × 2.46	28.5
	18		40.5	24.5	35	15	1" 1/16 - 12 UN	37.5	32	33	32	TN 514 - 18L - 1" 1/16 - 12 UN	23.47 × 2.95	32.9
	22	160	44	28	37	15	1" 1/16 - 12 UN	37.5	36	33	32	TN 514 - 22L - 1" 1/16 - 12 UN	23.47 × 2.95	55.5
	28		47	31	42	15	1" 5/16 - 12 UN	44	41	41	41	TN 514 - 28L - 1" 5/16 - 12 UN	29.74 × 2.95	47.3
	35		59	38	48	15	1" 5/8 - 12 UN	54.5	50	48	50	TN 514 - 35L - 1" 5/8 - 12 UN	37.47 × 3.00	83.0
	42		61	38	49	15	1" 7/8 - 12 UN	56	60	48	55	TN 514 - 42L - 1" 7/8 - 12 UN	43.69 × 3.00	91.5
重型 S	6	400	30.5	15.5	23	9	7/16 - 20 UNF	16.2	17	14	14	TN 514 - 6S - 7/16 - 20 UNF	8.92 × 1.83	6.5
	8		33.5	18	27	10	9/16 - 18 UNF	21.2	19	19	17	TN 514 - 8S - 9/16 - 18 UNF	11.89 × 1.98	8.6
	10		34	18	27.5	10	9/16 - 18 UNF	21.2	22	19	17	TN 514 - 10S - 9/16 - 18 UNF	11.89 × 1.98	9.1
	12		38	22	33	11	3/4 - 16 UNF	26.2	24	22	22	TN 514 - 12S - 3/4 - 16 UNF	16.36 × 2.21	21.5
	16		43	25	37.3	12.7	7/8 - 14 UNF	29.3	30	27	27	TN 514 - 16S - 7/8 - 14 UNF	19.18 × 2.46	28.5
	20		49	28	38	15	1" 1/16 - 12 UN	37.5	36	33	32	TN 514 - 20S - 1" 1/16 - 12 UN	23.47 × 2.95	57.5
	25		54.5	30.5	42	15	1" 1/16 - 12 UN	37.5	46	41	32	TN 514 - 25S - 1" 1/16 - 12 UN	23.47 × 2.95	72.8
	30	250	62	36	54	15	1" 5/8 - 12 UN	54.5	50	48	50	TN 514 - 30S - 1" 5/8 - 12 UN	37.47 × 3.00	91.5
	38		65	34	54	15	1" 7/8 - 12 UN	56	60	48	55	TN 514 - 38S - 1" 7/8 - 12 UN	43.69 × 3.00	102.5

Overall sizes are with closed fitting.
总长为预安装后的长度。
* Temperature range without pressure reductions with connections fitted with O-Ring in NBR (standard) and FPM (to order):
NBR (Perbunan): from -35 to +100℃ - FPM (Viton): from -25 to +120℃
适合带橡胶垫的零件工作温度范围：NBR 丁晴橡胶 -35° 至 +100℃，PM (Viton): 氟橡胶 -25 至 +120℃

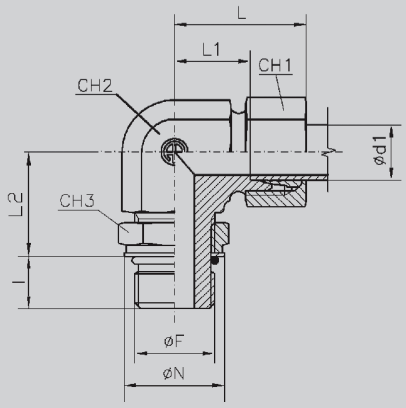

TN 514 M

Angular rotary fitting with bulkhead nut
可调向直角弯接头
可连接螺纹形式：公制圆柱螺纹ISO 6149-3

系列	Ø 钢管外径 d_1	公称压力 PN	尺寸									订货型号	O 型圈尺寸	重量 kg./100 件
			L ≈	L1	L2	l	Ø F	Ø N	CH1	CH2	CH3			
超轻型	4	250	21.5	11.5	18.5	8.5	10 × 1	15	10	11	14	TN 514 - 4 LLM 10×1	8.1 × 1.6	2.9
	6		25	13	16.5	8.5	10 × 1	15	12	14	14	TN 514 - 6 LLM 10×1	8.1 × 1.6	3.1
	6		25	13	21	11	12 × 1.5	18	12	14	17	TN 514 - 6 LLM 12×1.5	9.3 × 2.2	4.9
轻型 L	6	315	29	14	19	8.5	10 × 1	15	14	14	14	TN 514 - 6 LM	8.1 × 1.6	6.5
	8		31	16	21	11	12 × 1.5	18	17	14	17	TN 514 - 8 LM	9.3 × 2.2	6.7
	10		32	17	24	11	14 × 1.5	20	19	19	19	TN 514 - 10 LM	11.3 × 2.2	8.7
	12	250	34	19	24.5	11.5	16 × 1.5	23	22	19	22	TN 514 - 12 LM	13.3 × 2.2	9.6
	15		36	21	28.5	12.5	18 × 1.5	25	27	22	24	TN 514 - 15 LM	15.3 × 2.2	22.5
	18		40	24	32.5	12.5	22 × 1.5	28	32	27	27	TN 514 - 18 LM	19.3 × 2.2	28.5
	22	160	44	28	34	15.5	27 × 2	33	36	33	32	TN 514 - 22 LM	23.6 × 2.9	55.2
	28		47	31	38.5	15.5	33 × 2	42	41	41	41	TN 514 - 28 LM	29.6 × 2.9	63.5
	35		59	38	46.5	15.5	42 × 2	51	50	48	50	TN 514 - 35 LM	38.6 × 2.9	83.0
	42		61	38	48	17	48 × 2	56	60	48	55	TN 514 - 42 LM	44.6 × 2.9	91.5
重型 S	6	400	30.5	15.5	22	11	12 × 1.5	18	17	14	17	TN 514 - 6 SM	9.3 × 2.2	7.5
	8		33	18	25	11	14 × 1.5	20	19	19	19	TN 514 - 8 SM	11.3 × 2.2	9.0
	10		34	18	25.5	12.5	16 × 1.5	23	22	19	22	TN 514 - 10 SM	13.3 × 2.2	9.9
	12		38	22	29	14	18 × 1.5	25	24	22	24	TN 514 - 12 SM	15.3 × 2.2	22.5
	16		43	25	35.5	14.5	22 × 1.5	28	30	27	27	TN 514 - 16 SM	19.3 × 2.2	28.5
	20		49	28	37.5	16	27 × 2	33	36	33	32	TN 514 - 20 SM	23.6 × 2.9	57.2
	25	315	54.5	30.5	41	16	33 × 2	42	46	41	41	TN 514 - 25 SM	29.6 × 2.9	75.5
	30	250	62	36	50	18	42 × 2	51	50	48	50	TN 514 - 30 SM	38.6 × 2.9	91.5
	38	200	65	34	49	20	48 × 2	56	60	48	55	TN 514 - 38 SM	44.6 × 2.9	102.5

Overall sizes are with closed fitting.
总长为预安装后的长度。

* Temperature range without pressure reductions with connections fitted with O-Ring in NBR (standard) and FPM (to order): NBR (Perbunan): from -35 to +100℃ - FPM (Viton): from -25 to + 120℃
适合带橡胶垫的零件工作温度范围：NBR 丁晴橡胶 -35° 至 +100℃，PM (Viton): 氟橡胶 -25 至 +120℃

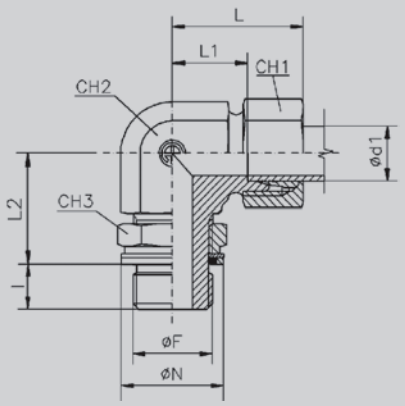

TN 514 W-M

Angular rotary fitting with bulkhead nut - O-Ring seal ring

可调向直角弯头带O型圈和垫圈

可连接螺纹形式：公制圆柱螺纹

系列	Ø 钢管外径 d_1	公称压力 PN	尺寸 L ≈	L1	L2	l	Ø F	Ø N	CH1	CH2	CH3	订货型号	O 型圈尺寸	重量 kg./100 件
超轻型 LL	4	250	21.5	11.5	19.5	7.5	10 × 1	15	10	11	14	TN 514 W - 4 LLM 10×1	8.1 × 1.6	2.9
	6		25	13	17.5	7.5	10 × 1	15	12	14	14	TN 514 W - 6 LLM 10×1	8.1 × 1.6	3.1
	6		25	13	22.5	9.5	12 × 1.5	18	12	14	17	TN 514 W - 6 LLM 12×1.5	9.3 × 2.2	4.9
轻型 L	6	315	29	14	20	7.5	10 × 1	15	14	14	14	TN 514 W - 6 LM	8.1 × 1.6	6.5
	8		31	16	22.5	9.5	12 × 1.5	18	17	14	17	TN 514 W - 8 LM	9.3 × 2.2	6.7
	10		32	17	25.5	9.5	14 × 1.5	20	19	19	19	TN 514 W - 10 LM	11.3 × 2.2	8.7
	12		34	19	26	10	16 × 1.5	23	22	19	22	TN 514 W - 12 LM	13.3 × 2.2	9.6
	15		36	21	30	11	18 × 1.5	25	27	22	24	TN 514 W - 15 LM	15.3 × 2.2	22.5
	18	250	40	24	34	11	22 × 1.5	28	32	27	27	TN 514 W - 18 LM	19.3 × 2.2	28.5
	22	160	44	28	36	13.5	27 × 2	33	36	33	32	TN 514 W - 22 LM	23.6 × 2.9	55.2
	28		47	31	40.5	13.5	33 × 2	41	41	41	41	TN 514 W - 28 LM	29.6 × 2.9	63.5
	35		59	38	48.5	13.5	42 × 2	51	50	48	50	TN 514 W - 35 LM	38.6 × 2.9	83.0
	42		61	38	50	15	48 × 2	56	60	48	55	TN 514 W - 42 LM	44.6 × 2.9	91.5
重型 S	6	315	30.5	15.5	23.5	9.5	12 × 1.5	18	17	14	17	TN 514 W - 6 SM	9.3 × 2.2	7.5
	8		33	18	26.5	9.5	14 × 1.5	20	19	19	19	TN 514 W - 8 SM	11.3 × 2.2	9.0
	10		34	18	27	11	16 × 1.5	23	22	19	22	TN 514 W - 10 SM	13.3 × 2.2	9.9
	12		38	22	30.5	12.5	18 × 1.5	25	24	22	24	TN 514 W - 12 SM	15.3 × 2.2	22.5
	16	250	43	25	37	13	22 × 1.5	28	30	27	27	TN 514 W - 16 SM	19.3 × 2.2	28.5
	20		49	28	39.5	14	27 × 2	33	36	33	32	TN 514 W - 20 SM	23.6 × 2.9	57.2
	25	160	54.5	30.5	43	14	33 × 2	41	46	41	41	TN 514 W - 25 SM	29.6 × 2.9	75.5
	30		62	36	52	16	42 × 2	51	50	48	50	TN 514 W - 30 SM	38.6 × 2.9	91.5
	38		65	34	51	18	48 × 2	56	60	48	55	TN 514 W - 38 SM	44.6 × 2.9	102.5

Overall sizes are with closed fitting.

总长为预安装后的长度。

* Temperature range without pressure reductions with connections fitted with O-Ring in NBR (standard) and FPM (to order): NBR (Perbunan): from -35 to +100℃ - FPM (Viton): from -25 to +120℃

适合带橡胶垫的零件工作温度范围：NBR 丁晴橡胶 -35° 至 +100℃，PM (Viton): 氟橡胶 -25 至 +120℃

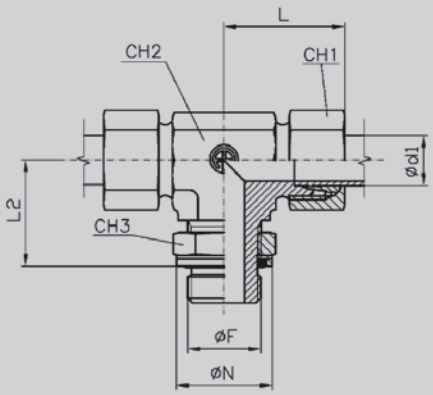

TN 515 R

Rotary fitting a tees with bulkhead nut
可调向三通接头/英制直螺纹接头
可连接螺纹形式：英制圆柱螺纹

系列	Ø 钢管外径 d_1	公称压力 PN	尺寸									订货型号	O 型圈尺寸	重量 kg./100 件
			L ≈	L1	L2	I	Ø F	Ø N	CH1	CH2	CH3			
轻型 L	6	315	29	14	20.2	6.3	1/8"	16	14	14	14	TN 515 - 6 lr	7.97 × 1.88	9.4
	8		31	16	22.5	9.5	1/4"	20.5	17	14	19	TN 515 - 8 lr	10.77 × 2.62	10.3
	10		32	17	24.5	9.5	1/4"	20.5	19	19	19	TN 515 - 10 lr	10.77 × 2.62	17.0
	12	250	34	19	27.5	9.5	3/8"	24	22	19	22	TN 515 - 12 lr	13.94 × 2.62	20.5
	15		36	21	30	13	1/2"	29	27	22	27	TN 515 - 15 LR	17.86 × 2.62	31.3
	18		40	24	36.5	13	1/2"	29	32	27	27	TN 515 - 18 LR	17.86 × 2.62	43.0
	22	160	44	28	37.5	13	3/4"	35	36	33	36	TN 515 - 22 LR	23.47 × 2.62	74.3
	28		47	31	41	16	1"	44.5	41	41	41	TN 515 - 28 LR	29.74 × 3.53	85.0
	35		59	38	49	16	1"1/4	53	50	48	50	TN 515 - 35 LR	37.69 × 3.53	124.5
	42		61	38	51	16	1" 1/2	58.5	60	48	55	TN 515 - 42 LR	44.04 × 3.53	140.0
重型 S	6	315	30.5	15.5	22.5	9.5	1/4"	20.5	17	14	19	TN 515 - 6 SR	10.77 × 2.62	11.0
	8		33	18	26.5	9.5	1/4"	20.5	19	19	19	TN 515 - 8 SR	10.77 × 2.62	15.3
	10	250	34	18	28.5	9.5	3/8"	24	22	19	22	TN 515 - 10 SR	13.94 × 2.62	19.0
	12		38	22	28.5	9.5	3/8"	24	24	22	22	TN 515 - 12 SR	13.94 × 2.62	24.0
	16		43	25	36	13	1/2"	29	30	27	27	TN 515 - 16 SR	17.86 × 2.62	43.5
	20		49	28	38	13	3/4"	35	36	33	36	TN 515 - 20 SR	23.47 × 2.62	78.5
	25		54.5	30.5	41	16	1"	44.5	46	41	41	TN 515 - 25 SR	29.74 × 3.53	198.0
	30	160	62	36	48	16	1" 1/4	53	50	48	50	TN 515 - 30 SR	37.69 × 3.53	141.5
	38		65	34	53	16	1" 1/2	58.5	60	48	55	TN 515 - 38 SR	44.04 × 3.53	163.0

Overall sizes are with closed fitting.
总长为预安装后的长度。

* Temperature range without pressure reductions with connections fitted with O-Ring in NBR (standard) and FPM (to order): NBR (Perbunan): from -35 to +100℃ - FPM (Viton): from -25 to +120℃
适合带橡胶垫的零件工作温度范围：NBR 丁晴橡胶 -35° 至 +100℃，PM (Viton): 氟橡胶 -25 至 +120℃

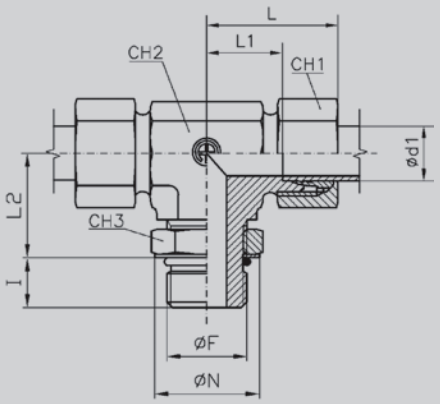

TN 515 UNF/UN

Rotary fitting a tees with bulkhead nut
可调向三通UNF/UN带O型圈
可连接螺纹形式：UNF/UN

系列	Ø 钢管外径 d_1	公称压力 PN	尺寸 L ≈	L1	L2	I	Ø F	ØN	CH1	CH2	CH3	订货型号	O 型圈尺寸	重量 kg./100 件
轻型 L	6	250	29	14	20	9	7/16 - 20 UNF	16.2	14	14	14	TN 515 - 6l - 7/16 - 20 UNF	8.92 × 1.83	9.0
	8		31	16	20	9	7/16 - 20 UNF	16.2	17	14	14	TN 515 - 8L - 7/16 - 20 UNF	8.92 × 1.83	10.0
	10		32	17	24	10	9/16 - 18 UNF	21.2	19	19	17	TN 515 - 10L - 9/16 - 18 UNF	11.89 × 1.98	17.5
	12		34	19	26	10	9/16 - 18 UNF	21.2	22	19	17	TN 515 - 12L - 9/16 - 18 UNF	11.89 × 1.98	19.0
	12		34	19	26.5	11	3/4 - 16 UNF	26.2	22	19	22	TN 515 - 12L - 3/4 - 16 UNF	16.36 × 2.21	24.9
	15		36	21	30	11	3/4 - 16 UNF	26.2	27	22	22	TN 515 - 15L - 3/4 - 16 UNF	16.36 × 2.21	33.0
	15		36	21	30.3	12.7	7/8 - 14 UNF	29.3	27	22	27	TN 515 - 15L - 7/8 - 14 UNF	19.18 × 2.46	42.0
	18		40	24	34.3	12.7	7/8 - 14 UNF	29.3	32	27	27	TN 515 - 18L - 7/8 - 14 UNF	19.18 × 2.46	58.0
	18		40.5	24.5	35	15	1“1/16 - 12 UN	37.5	32	33	32	TN 515 - 18L - 1“1/16 - 12 UN	23.47 × 2.95	60.0
	22	160	44	28	37	15	1“1/16 - 12 UN	37.5	36	33	32	TN 515 - 22L - 1“1/16 - 12 UN	23.47 × 2.95	65.0
	28		47	31	42	15	1“5/16 - 12 UN	44	41	41	41	TN 515 - 28L - 1“5/16 - 12 UN	29.74 × 2.95	78.6
	35		59	38	48	15	1“5/8 - 12 UN	54.5	50	48	50	TN 515 - 35L - 1“5/8 - 12 UN	37.47 × 3.00	124.5
	42		61	38	49	15	1“7/8 - 12 UN	56	60	48	55	TN 515 - 42L - 1“7/8 - 12 UN	43.69 × 3.00	146.0
重型 S	6	400	30.5	15.5	23	9	7/16 - 20 UNF	16.2	17	14	14	TN 515 - 6S - 7/16 - 20 UNF	8.92 × 1.83	10.8
	8		33.5	18	27	10	9/16 - 18 UNF	21.2	19	19	17	TN 515 - 8S - 9/16 - 18 UNF	11.89 × 1.98	17.6
	10		34	18	27.5	10	9/16 - 18 UNF	21.2	22	19	17	TN 515 - 10S - 9/16 - 18 UNF	11.89 × 1.98	19.5
	12		38	22	33	11	3/4 - 16 UNF	26.2	24	22	22	TN 515 - 12S - 3/4 - 16 UNF	16.36 × 2.21	31.0
	16		43	25	37.3	12.7	7/8 - 14 UNF	29.3	30	27	27	TN 515 - 16S - 7/8 - 14 UNF	19.18 × 2.46	42.5
	20		49	28	38	15	1“1/16 - 12 UN	37.5	36	33	32	TN 515 - 20S - 1“1/16 - 12 UN	23.47 × 2.95	70.0
	25		54.5	30.5	42	15	1“1/16 - 12 UN	37.5	46	41	32	TN 515 - 25S - 1“1/16 - 12 UN	23.47 × 2.95	102.6
	30	250	62	36	54	15	1“5/8 - 12 UN	54.5	50	48	50	TN 515 - 30S - 1“5/8 - 12 UN	37.47 × 3.00	141.5
	38		65	34	54	15	1“7/8 - 12 UN	56	60	48	55	TN 515 - 38S - 1“7/8 - 12 UN	43.69 × 3.00	163.5

Overall sizes are with closed fitting.
总长为预安装后的长度。

* Temperature range without pressure reductions with connections fitted with O-Ring in NBR (standard) and FPM (to order):
NBR (Perbunan): from -35 to +100℃ - FPM (Viton): from -25 to +120℃
适合带橡胶垫的零件工作温度范围：NBR 丁晴橡胶 -35° 至 +100℃，PM (Viton): 氟橡胶 -25 至 +120℃

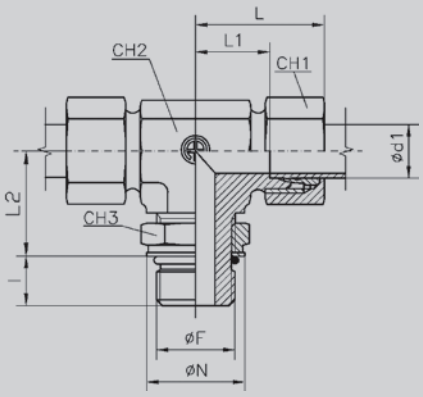

TN 515 M

Rotary fitting a tees with bulkhead nut
可调向三通公制螺纹管接头
可连接螺纹形式：公制圆柱螺纹ISO 6149-3

系列	Ø 钢管外径 d_1	公称压力 PN	尺寸									订货型号	O 型圈尺寸	重量 kg./100 件
			L ≈	L1	L2	I	Ø F	Ø N	CH1	CH2	CH3			
轻型 L	6	315	29	14	19	8.5	10 × 1	15	14	14	14	TN 515 - 6 LM	8.1 × 1.6	9.3
	8		31	16	21	11	12 × 1.5	18	17	14	17	TN 515 - 8 LM	9.3 × 2.2	10.5
	10		32	17	24	11	14 × 1.5	20	19	19	19	TN 515 - 10 LM	11.3 × 2.2	17.5
	12	250	34	19	24.5	11.5	16 × 1.5	23	22	19	22	TN 515 - 12 LM	13.3 × 2.2	19.0
	15		36	21	28.5	12.5	18 × 1.5	25	27	22	24	TN 515 - 15 LM	15.3 × 2.2	33.0
	18		40	24	32.5	12.5	22 × 1.5	28	32	27	27	TN 515 - 18 LM	19.3 × 2.2	42.5
	22	160	44	28	34	15.5	27 × 2	33	36	33	32	TN 515 - 22 LM	23.6 × 2.9	76.2
	28		47	31	38.5	15.5	33 × 2	42	41	41	41	TN 515 - 28 LM	29.6 × 2.9	81.3
	35		59	38	46.5	15.5	42 × 2	51	50	48	50	TN 515 - 35 LM	38.6 × 2.9	124.5
	42		61	38	48	17	48 × 2	56	60	48	55	TN 515 - 42 LM	44.6 × 2.9	140.5
重型 S	6	400	30.5	15.5	22	11	12 × 1.5	18	17	14	17	TN 515 - 6 SM	9.3 × 2.2	10.5
	8		33	18	25	11	14 × 1.5	20	19	19	19	TN 515 - 8 SM	11.3 × 2.2	17.8
	10		34	18	25.5	12.5	16 × 1.5	23	22	19	22	TN 515 - 10 SM	13.3 × 2.2	19.5
	12		38	22	29	14	18 × 1.5	25	24	22	24	TN 515 - 12 SM	15.3 × 2.2	31.5
	16		43	25	35.5	14.5	22 × 1.5	28	30	27	27	TN 515 - 16 SM	19.3 × 2.2	42.8
	20		49	28	37.5	16	27 × 2	33	36	33	32	TN 515 - 20 SM	23.6 × 2.9	80.0
	25	315	54.5	30.5	41	16	33 × 2	42	46	41	41	TN 515 - 25 SM	29.6 × 2.9	105.5
	30	250	62	36	50	18	42 × 2	51	50	48	50	TN 515 - 30 SM	38.6 × 2.9	141.5
	38	200	65	34	49	20	48 × 2	56	60	48	55	TN 515 - 38 SM	44.6 × 2.9	163.0

Overall sizes are with closed fitting.
总长为预安装后的长度。

* Temperature range without pressure reductions with connections fitted with O-Ring in NBR (standard) and FPM (to order): NBR (Perbunan): from -35 to +100℃ - FPM (Viton): from -25 to +120℃
适合带橡胶垫的零件工作温度范围：NBR 丁晴橡胶 -35° 至 +100℃，PM (Viton): 氟橡胶 -25 至 +120℃

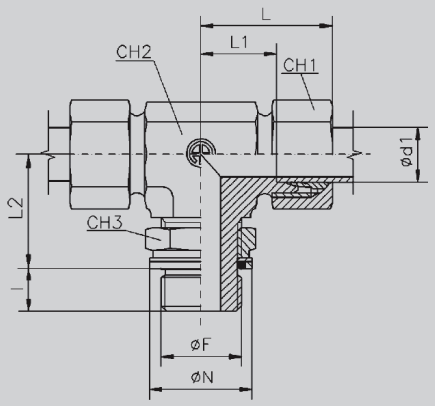

TN 515 W-M

Rotary fitting a tees with bulkhead nut - O-Ring seal ring

可调向三通公制螺纹，带O型圈和垫圈

可连接螺纹形式：公制圆柱螺纹

系列	Ø 钢管外径 d_1	公称压力 PN	尺寸 L ≈	L1	L2	I	Ø F	Ø N	CH1	CH2	CH3	订货型号	O 型圈尺寸	重量 kg./100 件
轻型 L	6	315	29	14	20	7.5	10 × 1	15	14	14	14	TN 515 w - 6 LM	8.1 × 1.6	9.3
	8		31	16	22.5	9.5	12 × 1.5	18	17	14	17	TN 515 w - 8 LM	9.3 × 2.2	10.5
	10		32	17	25.5	9.5	14 × 1.5	20	19	19	19	TN 515 w - 10 LM	11.3 × 2.2	17.5
	12		34	19	26	10	16 × 1.5	23	22	19	22	TN 515 w - 12 LM	13.3 × 2.2	19.0
	15		36	21	30	11	18 × 1.5	25	27	22	24	TN 515 W - 15 LM	15.3 × 2.2	33.0
	18	250	40	24	34	11	22 × 1.5	28	32	27	27	TN 515 W - 18 LM	19.3 × 2.2	42.5
	22	160	44	28	36	13.5	27 × 2	33	36	33	32	TN 515 W - 22 LM	23.6 × 2.9	76.2
	28		47	31	40.5	13.5	33 × 2	41	41	41	41	TN 515 W - 28 LM	29.6 × 2.9	81.3
	35		59	38	48.5	13.5	42 × 2	51	50	48	50	TN 515 W - 35 LM	38.6 × 2.9	124.5
	42		61	38	50	15	48 × 2	56	60	48	55	TN 515 W - 42 LM	44.6 × 2.9	140.5
重型 S	6	315	30.5	15.5	23.5	9.5	12 × 1.5	18	17	14	17	TN 515 W - 6 SM	9.3 × 2.2	10.5
	8		33	18	26.5	9.5	14 × 1.5	20	19	19	19	TN 515 W - 8 SM	11.3 × 2.2	17.8
	10		34	18	27	11	16 × 1.5	23	22	19	22	TN 515 W - 10 SM	13.3 × 2.2	19.5
	12		38	22	30.5	12.5	18 × 1.5	25	24	22	24	TN 515 W - 12 SM	15.3 × 2.2	31.5
	16	250	43	25	37	13	22 × 1.5	28	30	27	27	TN 515 W - 16 SM	19.3 × 2.2	42.8
	20		49	28	39.5	14	27 × 2	33	36	33	32	TN 515 W - 20 SM	23.6 × 2.9	80.0
	25	160	54.5	30.5	43	14	33 × 2	41	46	41	41	TN 515 W - 25 SM	29.6 × 2.9	105.5
	30		62	36	52	16	42 × 2	51	50	48	50	TN 515 W - 30 SM	38.6 × 2.9	141.5
	38		65	34	51	18	48 × 2	56	60	48	55	TN 515 W - 38 SM	44.6 × 2.9	163.0

Overall sizes are with closed fitting.

总长为预安装后的长度。

* Temperature range without pressure reductions with connections fitted with O-Ring in NBR (standard) and FPM (to order): NBR (Perbunan): from -35 to +100℃ - FPM (Viton): from -25 to +120℃

适合带橡胶垫的零件工作温度范围：NBR 丁晴橡胶 -35° 至 +100℃，PM (Viton): 氟橡胶 -25 至 +120℃

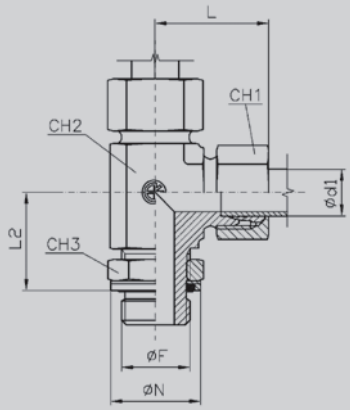

TN 516 R

Rotary fitting a L with bulkhead nut
可调向L型三通接头英制接头
可连接螺纹形式：英制圆柱螺纹

系列	Ø 钢管外径 d_1	公称压力 PN	尺寸 L ≈	L1	L2	I	Ø F	Ø N	CH1	CH2	CH3	订货型号	O 型圈尺寸	重量 kg./100 件
轻型 L	6	315	29	14	20.2	6.3	1/8"	16	14	14	14	TN 516 - 6 LR	7.97 × 1.88	9.4
	8		31	16	22.5	9.5	1/4"	20.5	17	14	19	TN 516 - 8 LR	10.77 × 2.62	10.3
	10		32	17	24.5	9.5	1/4"	20.5	19	19	19	TN 516 - 10 LR	10.77 × 2.62	17.0
	12	250	34	19	27.5	9.5	3/8"	24	22	19	22	TN 516 - 12 LR	13.94 × 2.62	20.5
	15		36	21	30	13	1/2"	29	27	22	27	TN 516 - 15 LR	17.86 × 2.62	31.3
	18		40	24	36.5	13	1/2"	29	32	27	27	TN 516 - 18 LR	17.86 × 2.62	43.0
	22	160	44	28	37.5	13	3/4"	35	36	33	36	TN 516 - 22 LR	23.47 × 2.62	74.3
	28		47	31	41	16	1"	44.5	41	41	41	TN 516 - 28 LR	29.74 × 3.53	85.0
	35		59	38	49	16	1"1/4	53	50	48	50	TN 516 - 35 LR	37.69 × 3.53	124.5
	42		61	38	51	16	1"1/2	58.5	60	48	55	TN 516 - 42 LR	44.04 × 3.53	140.0
重型 S	6	315	30.5	15.5	22.5	9.5	1/4"	20.5	17	14	19	TN 516 - 6 SR	10.77 × 2.62	11.0
	8		33	18	26.5	9.5	1/4"	20.5	19	19	19	TN 516 - 8 SR	10.77 × 2.62	15.3
	10	250	34	18	28.5	9.5	3/8"	24	22	19	22	TN 516 - 10 SR	13.94 × 2.62	19.0
	12		38	22	28.5	9.5	3/8"	24	24	22	22	TN 516 - 12 SR	13.94 × 2.62	24.0
	16		43	25	36	13	1/2"	29	30	27	27	TN 516 - 16 SR	17.86 × 2.62	43.5
	20		49	28	38	13	3/4"	35	36	33	36	TN 516 - 20 SR	23.47 × 2.62	78.5
	25		54.5	30.5	41	16	1"	44.5	46	41	41	TN 516 - 25 SR	29.74 × 3.53	109.0
	30	160	62	36	48	16	1"1/4	53	50	48	50	TN 516 - 30 SR	37.69 × 3.53	141.5
	38		65	34	53	16	1"1/2	58.5	60	48	55	TN 516 - 38 SR	44.04 × 3.53	163.0

Overall sizes are with closed fitting.
总长为预安装后的长度。
* Temperature range without pressure reductions with connections fitted with O-Ring in NBR (standard) and FPM (to order):
NBR (Perbunan): from -35 to +100℃ - FPM (Viton): from -25 to +120℃
适合带橡胶垫的零件工作温度范围：NBR 丁晴橡胶 -35° 至 +100℃，PM (Viton): 氟橡胶 -25 至 +120℃

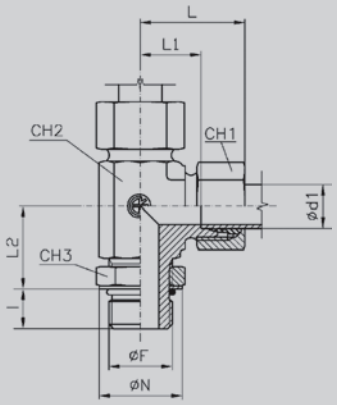

TN 516 UNF/UN

Rotary fitting a L with bulkhead nut
可调向L型三通UNF/UN带O型圈
可连接螺纹形式：UNF/UN

系列	Ø 钢管外径 d_1	公称压力 PN	尺寸 L ≈	L1	L2	I	Ø F	ØN	CH1	CH2	CH3	订货型号	O 型圈尺寸	重量 kg./100 件
轻型 L	6	315	29	14	20	9	7/16 - 20 UNF	16.2	14	14	14	TN 516 - 6L - 7/16 - 20 UNF	8.92 × 1.83	9.0
	8		31	16	20	9	7/16 - 20 UNF	16.2	17	14	14	TN 516 - 8L - 7/16 - 20 UNF	8.92 × 1.83	10.0
	10		32	17	24	10	9/16 - 18 UNF	21.2	19	19	17	TN 516 - 10L - 9/16 - 18 UNF	11.89 × 1.98	17.5
	12		34	19	26	10	9/16 - 18 UNF	21.2	22	19	17	TN 516 - 12L - 9/16 - 18 UNF	11.89 × 1.98	19.0
	12		34	19	26.5	11	3/4 - 16 UNF	26.2	22	19	22	TN 516 - 12L - 3/4 - 16 UNF	16.36 × 2.21	24.9
	15		36	21	30	11	3/4 - 16 UNF	26.2	27	22	22	TN 516 - 15L - 3/4 - 16 UNF	16.36 × 2.21	33.0
	15		36	21	30.3	12.7	7/8 - 14 UNF	29.3	27	22	27	TN 516 - 15L - 7/8 - 14 UNF	19.18 × 2.46	42.0
	18		40	24	34.3	12.7	7/8 - 14 UNF	29.3	32	27	27	TN 516 - 18L - 7/8 - 14 UNF	19.18 × 2.46	58.0
	18		40.5	24.5	35	15	1"1/16 - 12 UN	37.5	32	33	32	TN 516 - 18L - 1"1/16 - 12 UN	23.47 × 2.95	60.0
	22	160	44	28	37	15	1"1/16 - 12 UN	37.5	36	33	32	TN 516 - 22L - 1"1/16 - 12 UN	23.47 × 2.95	65.0
	28		47	31	42	15	1"5/16 - 12 UN	44	41	41	41	TN 516 - 28L - 1"5/16 - 12 UN	29.74 × 2.95	78.6
	35		59	38	48	15	1"5/8 - 12 UN	54.5	50	48	50	TN 516 - 35L - 1"5/8 - 12 UN	37.47 × 3.00	124.5
	42		61	38	49	15	1"7/8 - 12 UN	56	60	48	55	TN 516 - 42L - 1"7/8 - 12 UN	43.69 × 3.00	146.0
重型 S	6	400	30.5	15.5	23	9	7/16 - 20 UNF	16.2	17	14	14	TN 516 - 6S - 7/16 - 20 UNF	8.92 × 1.83	10.8
	8		33.5	18	27	10	9/16 - 18 UNF	21.2	19	19	17	TN 516 - 8S - 9/16 - 18 UNF	11.89 × 1.98	17.6
	10		34	18	27.5	10	9/16 - 18 UNF	21.2	22	19	17	TN 516 - 10S - 9/16 - 18 UNF	11.89 × 1.98	19.5
	12		38	22	33	11	3/4 - 16 UNF	26.2	24	22	22	TN 516 - 12S - 3/4 - 16 UNF	16.36 × 2.21	31.0
	16		43	25	37.3	12.7	7/8 - 14 UNF	29.3	30	27	27	TN 516 - 16S - 7/8 - 14 UNF	19.18 × 2.46	42.5
	20		49	28	38	15	1"1/16 - 12 UN	37.5	36	33	32	TN 516 - 20S - 1"1/16 - 12 UN	23.47 × 2.95	70.0
	25		54.5	30.5	42	15	1"1/16 - 12 UN	37.5	46	41	32	TN 516 - 25S - 1"1/16 - 12 UN	23.47 × 2.95	102.6
	30	250	62	36	54	15	1"5/8 - 12 UN	54.5	50	48	50	TN 516 - 30S - 1"5/8 - 12 UN	37.47 × 3.00	141.5
	38		65	34	54	15	1"7/8 - 12 UN	56	60	48	55	TN 516 - 38S - 1"7/8 - 12 UN	43.69 × 3.00	163.5

Overall sizes are with closed fitting.
总长为预安装后的长度。
* Temperature range without pressure reductions with connections fitted with O-Ring in NBR (standard) and FPM (to order): NBR (Perbunan): from -35 to +100℃ - FPM (Viton): from -25 to +120℃
适合带橡胶垫的零件工作温度范围：NBR 丁晴橡胶 -35° 至 +100℃，PM (Viton): 氟橡胶 -25 至 +120℃

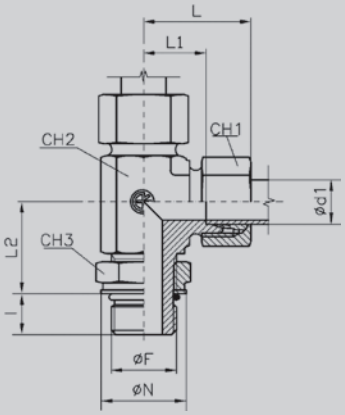

TN 516 M

Rotary fitting a L with bulkhead nut
可调向L型三通公制螺纹
可连接螺纹形式：公制圆柱螺纹ISO 6149-3

系列	Ø 钢管外径 d_1	公称压力 PN	尺寸 L ≈	L1	L2	l	Ø F	Ø N	CH1	CH2	CH3	订货型号	O 型圈尺寸	重量 kg./100 件
轻型 L	6	315	29	14	19	8.5	10 × 1	15	14	14	14	TN 516 - 6 LM	8.1 × 1.6	9.3
	8		31	16	21	11	12 × 1.5	18	17	14	17	TN 516 - 8 LM	9.3 × 2.2	10.5
	10		32	17	24	11	14 × 1.5	20	19	19	19	TN 516 - 10 LM	11.3 × 2.2	17.5
	12	250	34	19	24.5	11.5	16 × 1.5	23	22	19	22	TN 516 - 12 LM	13.3 × 2.2	19.0
	15		36	21	28.5	12.5	18 × 1.5	25	27	22	24	TN 516 - 15 LM	15.3 × 2.2	33.0
	18		40	24	32.5	12.5	22 × 1.5	28	32	27	27	TN 516 - 18 LM	19.3 × 2.2	42.5
	22	160	44	28	34	15.5	27 × 2	33	36	33	32	TN 516 - 22 LM	23.6 × 2.9	76.2
	28		47	31	38.5	15.5	33 × 2	42	41	41	41	TN 516 - 28 LM	29.6 × 2.9	81.3
	35		59	38	46.5	15.5	42 × 2	51	50	48	50	TN 516 - 35 LM	38.6 × 2.9	124.5
	42		61	38	48	17	48 × 2	56	60	48	55	TN 516 - 42 LM	44.6 × 2.9	140.5
重型 S	6	400	30.5	15.5	22	11	12 × 1.5	18	17	14	17	TN 516 - 6 SM	9.3 × 2.2	10.5
	8		33	18	25	11	14 × 1.5	20	19	19	19	TN 516 - 8 SM	11.3 × 2.2	17.8
	10		34	18	25.5	12.5	16 × 1.5	23	22	19	22	TN 516 - 10 SM	13.3 × 2.2	19.5
	12		38	22	29	14	18 × 1.5	25	24	22	24	TN 516 - 12 SM	15.3 × 2.2	31.5
	16		43	25	35.5	14.5	22 × 1.5	28	30	27	27	TN 516 - 16 SM	19.3 × 2.2	42.8
	20		49	28	37.5	16	27 × 2	33	36	33	32	TN 516 - 20 SM	23.6 × 2.9	80.0
	25	315	54.5	30.5	41	16	33 × 2	42	46	41	41	TN 516 - 25 SM	29.6 × 2.9	105.5
	30	250	62	36	50	18	42 × 2	51	50	48	50	TN 516 - 30 SM	38.6 × 2.9	141.5
	38	200	65	34	49	20	48 × 2	56	60	48	55	TN 516 - 38 SM	44.6 × 2.9	163.0

Overall sizes are with closed fitting.
总长为预安装后的长度。

* Temperature range without pressure reductions with connections fitted with O-Ring in NBR (standard) and FPM (to order):
NBR (Perbunan): from -35 to +100℃ - FPM (Viton): from -25 to +120℃
适合带橡胶垫的零件工作温度范围：NBR 丁晴橡胶 -35° 至 +100℃，PM (Viton): 氟橡胶 -25 至 +120℃

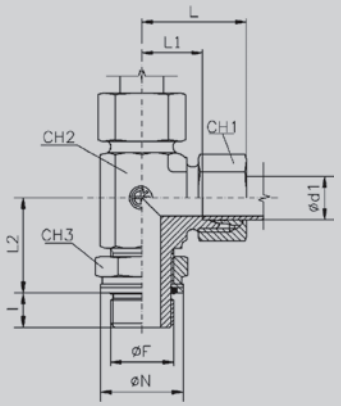

TN 516 W-M

Rotary fitting a L with bulkhead nut - O-Ring seal ring

可调式L型三通公制螺纹带O型圈和垫圈

可连接螺纹形式：公制圆柱螺纹

系列	Ø 钢管外径 d_1	公称压力 PN	尺寸 L ≈	L1	L2	l	Ø F	Ø N	CH1	CH2	CH3	订货型号	O 型圈尺寸	重量 kg./100 件
轻型 L	6	315	29	14	20	7.5	10 × 1	15	14	14	14	TN 516 W - 6 LM	8.1 × 1.6	9.3
	8		31	16	22.5	9.5	12 × 1.5	18	17	14	17	TN 516 W - 8 LM	9.3 × 2.2	10.5
	10		32	17	25.5	9.5	14 × 1.5	20	19	19	19	TN 516 W - 10 LM	11.3 × 2.2	17.5
	12		34	19	26	10	16 × 1.5	23	22	19	22	TN 516 W - 12 LM	13.3 × 2.2	19.0
	15		36	21	30	11	18 × 1.5	25	27	22	24	TN 516 W - 15 LM	15.3 × 2.2	33.0
	18	250	40	24	34	11	22 × 1.5	28	32	27	27	TN 516 W - 18 LM	19.3 × 2.2	42.5
	22	160	44	28	36	13.5	27 × 2	33	36	33	32	TN 516 W - 22 LM	23.6 × 2.9	76.2
	28		47	31	40.5	13.5	33 × 2	41	41	41	41	TN 516 W - 28 LM	29.6 × 2.9	81.3
	35		59	38	48.5	13.5	42 × 2	51	50	48	50	TN 516 W - 35 LM	38.6 × 2.9	124.5
	42		61	38	50	15	48 × 2	56	60	48	55	TN 516 W - 42 LM	44.6 × 2.9	140.5
重型 S	6	315	30.5	15.5	23.5	9.5	12 × 1.5	18	17	14	17	TN 516 W - 6 SM	9.3 × 2.2	10.5
	8		33	18	26.5	9.5	14 × 1.5	20	19	19	19	TN 516 W - 8 SM	11.3 × 2.2	17.8
	10		34	18	27	11	16 × 1.5	23	22	19	22	TN 516 W - 10 SM	13.3 × 2.2	19.5
	12		38	22	30.5	12.5	18 × 1.5	25	24	22	24	TN 516 W - 12 SM	15.3 × 2.2	31.5
	16	250	43	25	37	13	22 × 1.5	28	30	27	27	TN 516 W - 16 SM	19.3 × 2.2	42.8
	20		49	28	39.5	14	27 × 2	33	36	33	32	TN 516 W - 20 SM	23.6 × 2.9	80.0
	25	160	54.5	30.5	43	14	33 × 2	41	46	41	41	TN 516 W - 25 SM	29.6 × 2.9	105.5
	30		62	36	52	16	42 × 2	51	50	48	50	TN 516 W - 30 SM	38.6 × 2.9	141.5
	38		65	34	51	18	48 × 2	56	60	48	55	TN 516 W - 38 SM	44.6 × 2.9	163.0

Overall sizes are with closed fitting.

总长为预安装后的长度。

* Temperature range without pressure reductions with connections fitted with O-Ring in NBR (standard) and FPM (to order):
NBR (Perbunan): from -35 to +100℃ - FPM (Viton): from -25 to +120℃

适合带橡胶垫的零件工作温度范围：NBR 丁晴橡胶 -35° 至 +100℃，PM (Viton): 氟橡胶 -25 至 +120℃

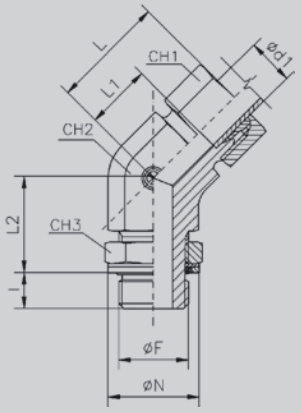

TN 517 R

Rotary fitting a 45° with bulkhead nut
可调向45° 角通接头英制螺纹
可连接螺纹形式：英制圆柱螺纹

系列	Ø 钢管外径 d_1	公称压力 PN	尺寸									订货型号	O 型圈尺寸	重量 kg./100 件
			L ≈	L1	L2	I	Ø F	Ø N	CH1	CH2	CH3			
轻型 L	6	315	24.5	9.5	21.7	6.3	1/8"	16	14	14	14	TN 517 - 6LR	7.97 × 1.88	5.1
	8		27	12	19.5	9.5	1/4"	20.5	17	14	19	TN 517 - 8 LR	10.77 × 2.62	5.6
	10		27	12	24.5	9.5	1/4"	20.5	19	19	19	TN 517 - 10 LR	10.77 × 2.62	10.5
	12	250	29	14	27.5	9.5	3/8"	24	22	19	22	TN 517 - 12 LR	13.94 × 2.62	14.8
	15		32	17	26	13	1/2"	29	27	22	27	TN 517 - 15 LR	17.86 × 2.62	20.1
	18		33	17	32	13	1/2"	29	32	27	27	TN 517 - 18 LR	17.86 × 2.62	26.0
	22	160	35.5	19.5	37.5	13	3/4"	35	36	33	36	TN 517 - 22 LR	23.47 × 2.62	42.1
	28		39	23	36	16	1"	44.5	41	41	41	TN 517 - 28 LR	29.74 × 3.53	55.9
	35		48	27	38	16	1"1/4	53	50	48	50	TN 517 - 35 LR	37.69 × 3.53	67.8
	42		49	26	38	16	1"1/2	58.5	60	48	55	TN 517 - 42 LR	44.04 × 3.53	75.9
重型 S	6	315	26	11	18.5	9.5	1/4"	20.5	17	14	19	TN 517 - 6 SR	10.77 × 2.62	5.7
	8		28	13	22.5	9.5	1/4"	20.5	19	19	19	TN 517 - 8 SR	10.77 × 2.62	10.5
	10	250	29	13	24.5	9.5	3/8"	24	22	19	22	TN 517 - 10 SR	13.94 × 2.62	12.7
	12		33	17	24.5	9.5	3/8"	24	24	22	22	TN 517 - 12 SR	13.94 × 2.62	15.4
	16		34	16	31	13	1/2"	29	30	27	27	TN 517 - 16 SR	17.86 × 2.62	22.4
	20		40	19	33	13	3/4"	35	36	33	36	TN 517 - 20 SR	23.47 × 2.62	33.1
	25		46	22	35	16	1"	44.5	46	41	41	TN 517 - 25 SR	29.74 × 3.53	68.5
	30	160	50	24	37	16	1"1/4	53	50	48	50	TN 517 - 30 SR	37.69 × 3.53	75.2
	38		55	24	37	16	1"1/2	58.5	60	48	55	TN 517 - 38 SR	44.04 × 3.53	86.2

Overall sizes are with closed fitting.
总长为预安装后的长度。

* Temperature range without pressure reductions with connections fitted with O-Ring in NBR (standard) and FPM (to order): NBR (Perbunan): from -35 to +100℃ - FPM (Viton): from -25 to +120℃
适合带橡胶垫的零件工作温度范围：NBR 丁晴橡胶 -35° 至 +100℃，PM (Viton): 氟橡胶 -25 至 +120℃

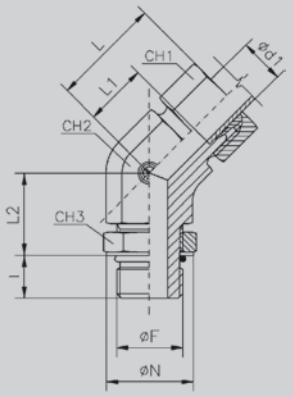

TN 517 UNF/UN

Rotary fitting a 45° with bulkhead nut
可调向45° 角通UNF/UN螺纹
可连接螺纹形式：UNF/UN

系列	Ø 钢管外径 d_1	公称压力 PN	尺寸 L ≈	L1	L2	l	Ø F	ØN	CH1	CH2	CH3	订货型号	O 型圈尺寸	重量 kg./100 件
轻型 L	6	315	24.5	9.5	20	9	7/16 - 20 UNF	16.2	14	14	14	TN 517 - 6L - 7/16 - 20 UNF	8.92 × 1.83	5.6
	8		27	12	20	9	7/16 - 20 UNF	16.2	17	14	14	TN 517 - 8L - 7/16 - 20 UNF	8.92 × 1.83	6.2
	10		27	12	24	10	9/16 - 18 UNF	21.2	19	19	17	TN 517 - 10L - 9/16 - 18 UNF	11.89 × 1.98	10.4
	12		29	14	26	10	9/16 - 18 UNF	21.2	22	19	17	TN 517 - 12L - 9/16 - 18 UNF	11.89 × 1.98	11.3
	12		29	14	26	11	3/4 - 16 UNF	26.2	22	19	22	TN 517 - 12L - 3/4 - 16 UNF	16.36 × 2.21	14.3
	15		32	17	26	11	3/4 - 16 UNF	26.2	27	22	22	TN 517 - 15L - 3/4 - 16 UNF	16.36 × 2.21	20.1
	15		32	17	26.3	12.7	7/8 - 14 UNF	29.3	27	22	27	TN 517 - 15L - 7/8 - 14 UNF	19.18 × 2.46	21.4
	18		33	17	32.3	12.7	7/8 - 14 UNF	29.3	32	27	27	TN 517 - 18L - 7/8 - 14 UNF	19.18 × 2.46	26.2
	18		34	18	32.5	15	1"1/16 - 12 UN	37.5	32	33	32	TN 517 - 18L - 1"1/16 - 12 UN	23.47 × 2.95	39.4
	22	160	35.5	19.5	35	15	1"1/16 - 12 UN	37.5	36	33	32	TN 517 - 22L - 1"1/16 - 12 UN	23.47 × 2.95	41.6
	28		39	23	37	15	1"5/16 - 12 UN	44	41	41	41	TN 517 - 28L - 1"5/16 - 12 UN	29.74 × 2.95	55.6
	35		48	27	39	15	1"5/8 - 12 UN	54.5	50	48	50	TN 517 - 35L - 1"5/8 - 12 UN	37.47 × 3.00	69.1
	42		49	26	39	15	1"7/8 - 12 UN	56	60	48	55	TN 517 - 42L - 1"7/8 - 12 UN	43.69 × 3.00	77.2
重型 S	6	400	26	11	21	9	7/16 - 20 UNF	16.2	17	14	14	TN 517 - 6S - 7/16 - 20 UNF	8.92 × 1.83	6.6
	8		28	13	23	10	9/16 - 18 UNF	21.2	19	19	17	TN 517 - 8S - 9/16 - 18 UNF	11.89 × 1.98	10.4
	10		29	13	23	10	9/16 - 18 UNF	21.2	22	19	17	TN 517 - 10S - 9/16 - 18 UNF	11.89 × 1.98	11.5
	12		33	17	25	11	3/4 - 16 UNF	26.2	24	22	22	TN 517 - 12S - 3/4 - 16 UNF	16.36 × 2.21	17.0
	16		34	16	32.3	12.7	7/8 - 14 UNF	29.3	30	27	27	TN 517 - 16S - 7/8 - 14 UNF	19.18 × 2.46	26.4
	20		40	19	35	15	1"1/16 - 12 UN	37.5	36	33	32	TN 517 - 20S - 1"1/16 - 12 UN	23.47 × 2.95	43.7
	25		46	22	37	15	1"1/16 - 12 UN	37.5	46	41	32	TN 517 - 25S - 1"1/16 - 12 UN	23.47 × 2.95	62.5
	30	250	50	24	39	15	1"5/8 - 12 UN	54.5	50	48	50	TN 517 - 30S - 1"5/8 - 12 UN	37.47 × 3.00	77.6
	38		55	24	39	15	1"7/8 - 12 UN	56	60	48	55	TN 517 - 38S - 1"7/8 - 12 UN	43.69 × 3.00	88.1

Overall sizes are with closed fitting.
总长为预安装后的长度。
* Temperature range without pressure reductions with connections fitted with O-Ring in NBR (standard) and FPM (to order): NBR (Perbunan): from -35 to +100℃ - FPM (Viton): from -25 to +120℃
适合带橡胶垫的零件工作温度范围：NBR 丁晴橡胶 -35° 至 +100℃，PM (Viton): 氟橡胶 -25 至 +120℃

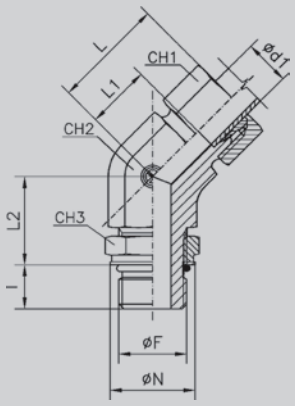

TN 517 M

Rotary fitting a 45° with bulkhead nut
可调向45° 角通公制螺纹
可连接螺纹形式：公制圆柱螺纹ISO 6149-3

系列	Ø 钢管外径 d_1	公称压力 PN	尺寸									订货型号	O 型圈尺寸	重量 kg./100 件
			L ≈	L1	L2	I	Ø F	Ø N	CH1	CH2	CH3			
轻型 L	6	315	29	14	19	8.5	10 × 1	15	14	14	14	TN 517 - 6 LM	8.1 × 1.6	5.6
	8		31	16	21	11	12 × 1.5	18	17	14	17	TN 517 - 8 LM	9.3 × 2.2	6.1
	10		32	17	24	11	14 × 1.5	20	19	19	19	TN 517 - 10 LM	11.3 × 2.2	10.5
	12	250	34	19	24.5	11.5	16 × 1.5	23	22	19	22	TN 517 - 12 LM	13.3 × 2.2	14.1
	15		36	21	28.5	12.5	18 × 1.5	25	27	22	24	TN 517 - 15 LM	15.3 × 2.2	19.6
	18		40	24	32.5	12.5	22 × 1.5	28	32	27	27	TN 517 - 18 LM	19.3 × 2.2	26.2
	22	160	44	28	34	15.5	27 × 2	33	36	33	32	TN 517 - 22 LM	23.6 × 2.9	42.0
	28		47	31	38.5	15.5	33 × 2	42	41	41	41	TN 517 - 28 LM	29.6 × 2.9	45.8
	35		59	38	46.5	15.5	42 × 2	51	50	48	50	TN 517 - 35 LM	38.6 × 2.9	69.8
	42		61	38	48	17	48 × 2	56	60	48	55	TN 517 - 42 LM	44.6 × 2.9	77.7
重型 S	6	400	30.5	15.5	22	11	12 × 1.5	18	17	14	17	TN 517 - 6 SM	9.3 × 2.2	6.2
	8		33	18	25	11	14 × 1.5	20	19	19	19	TN 517 - 8 SM	11.3 × 2.2	10.6
	10		34	18	25.5	12.5	16 × 1.5	23	22	19	22	TN 517 - 10 SM	13.3 × 2.2	11.3
	12		38	22	29	14	18 × 1.5	25	24	22	24	TN 517 - 12 SM	15.3 × 2.2	14.2
	16		43	25	35.5	14.5	22 × 1.5	28	30	27	27	TN 517 - 16 SM	19.3 × 2.2	22.0
	20		49	28	37.5	16	27 × 2	33	36	33	32	TN 517 - 20 SM	23.6 × 2.9	43.9
	25	315	54.5	30.5	41	16	33 × 2	42	46	41	41	TN 517 - 25 SM	29.6 × 2.9	58.9
	30	250	62	36	50	18	42 × 2	51	50	48	50	TN 517 - 30 SM	38.6 × 2.9	78.4
	38	200	65	34	49	20	48 × 2	56	60	48	55	TN 517 - 38 SM	44.6 × 2.9	88.7

Overall sizes are with closed fitting.
总长为预安装后的长度。

* Temperature range without pressure reductions with connections fitted with O-Ring in NBR (standard) and FPM (to order):
NBR (Perbunan): from -35 to +100℃ - FPM (Viton): from -25 to +120℃
适合带橡胶垫的零件工作温度范围：NBR 丁晴橡胶 -35° 至 +100℃，PM (Viton): 氟橡胶 -25 至 +120℃

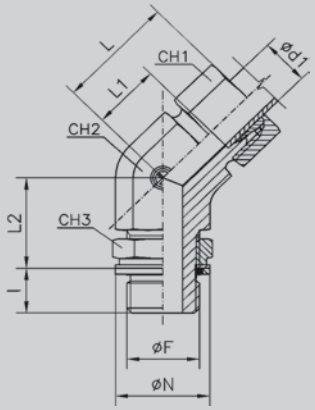

TN 517 W-M

Rotary fitting a 45° with bulkhead nut - O-Ring seal ring

可调向45° 角通公制螺纹带O型圈和垫圈

可连接螺纹形式：公制圆柱螺纹

系列	Ø 钢管外径 d_1	公称压力 PN	尺寸 L ≈	L1	L2	l	Ø F	Ø N	CH1	CH2	CH3	订货型号	O 型圈尺寸	重量 kg./100 件
轻型 L	6	315	29	14	20	7.5	10 × 1	15	14	14	14	TN 517 W - 6 LM	8.1 × 1.6	5.6
	8		31	16	22.5	9.5	12 × 1.5	18	17	14	17	TN 517 W - 8 LM	9.3 × 2.2	6.1
	10		32	17	25.5	9.5	14 × 1.5	20	19	19	19	TN 517 W - 10 LM	11.3 × 2.2	10.5
	12		34	19	26	10	16 × 1.5	23	22	19	22	TN 517 W - 12 LM	13.3 × 2.2	14.1
	15		36	21	30	11	18 × 1.5	25	27	22	24	TN 517 W - 15 LM	15.3 × 2.2	19.6
	18	250	40	24	34	11	22 × 1.5	28	32	27	27	TN 517 W - 18 LM	19.3 × 2.2	26.2
	22	160	44	28	36	13.5	27 × 2	33	36	33	32	TN 517 W - 22 LM	23.6 × 2.9	42.0
	28		47	31	40.5	13.5	33 × 2	41	41	41	41	TN 517 W - 28 LM	29.6 × 2.9	45.8
	35		59	38	48.5	13.5	42 × 2	51	50	48	50	TN 517 W - 35 LM	38.6 × 2.9	69.8
	42		61	38	50	15	48 × 2	56	60	48	55	TN 517 W - 42 LM	44.6 × 2.9	77.7
重型 S	6	315	30.5	15.5	23.5	9.5	12 × 1.5	18	17	14	17	TN 517 W - 6 SM	9.3 × 2.2	6.2
	8		33	18	26.5	9.5	14 × 1.5	20	19	19	19	TN 517 W - 8 SM	11.3 × 2.2	10.6
	10		34	18	27	11	16 × 1.5	23	22	19	22	TN 517 W - 10 SM	13.3 × 2.2	11.3
	12		38	22	30.5	12.5	18 × 1.5	25	24	22	24	TN 517 W - 12 SM	15.3 × 2.2	14.2
	16	250	43	25	37	13	22 × 1.5	28	30	27	27	TN 517 W - 16 SM	19.3 × 2.2	22.0
	20		49	28	39.5	14	27 × 2	33	36	33	32	TN 517 W - 20 SM	23.6 × 2.9	43.9
	25	160	54.5	30.5	43	14	33 × 2	41	46	41	41	TN 517 W - 25 SM	29.6 × 2.9	58.9
	30		62	36	52	16	42 × 2	51	50	48	50	TN 517 W - 30 SM	38.6 × 2.9	78.4
	38		65	34	51	18	48 × 2	56	60	48	55	TN 517 W - 38 SM	44.6 × 2.9	88.7

Overall sizes are with closed fitting.

总长为预安装后的长度。

* Temperature range without pressure reductions with connections fitted with O-Ring in NBR (standard) and FPM (to order): NBR (Perbunan): from -35 to +100℃ - FPM (Viton): from -25 to +120℃

适合带橡胶垫的零件工作温度范围：NBR 丁晴橡胶 -35° 至 +100℃，PM (Viton): 氟橡胶 -25 至 +120℃

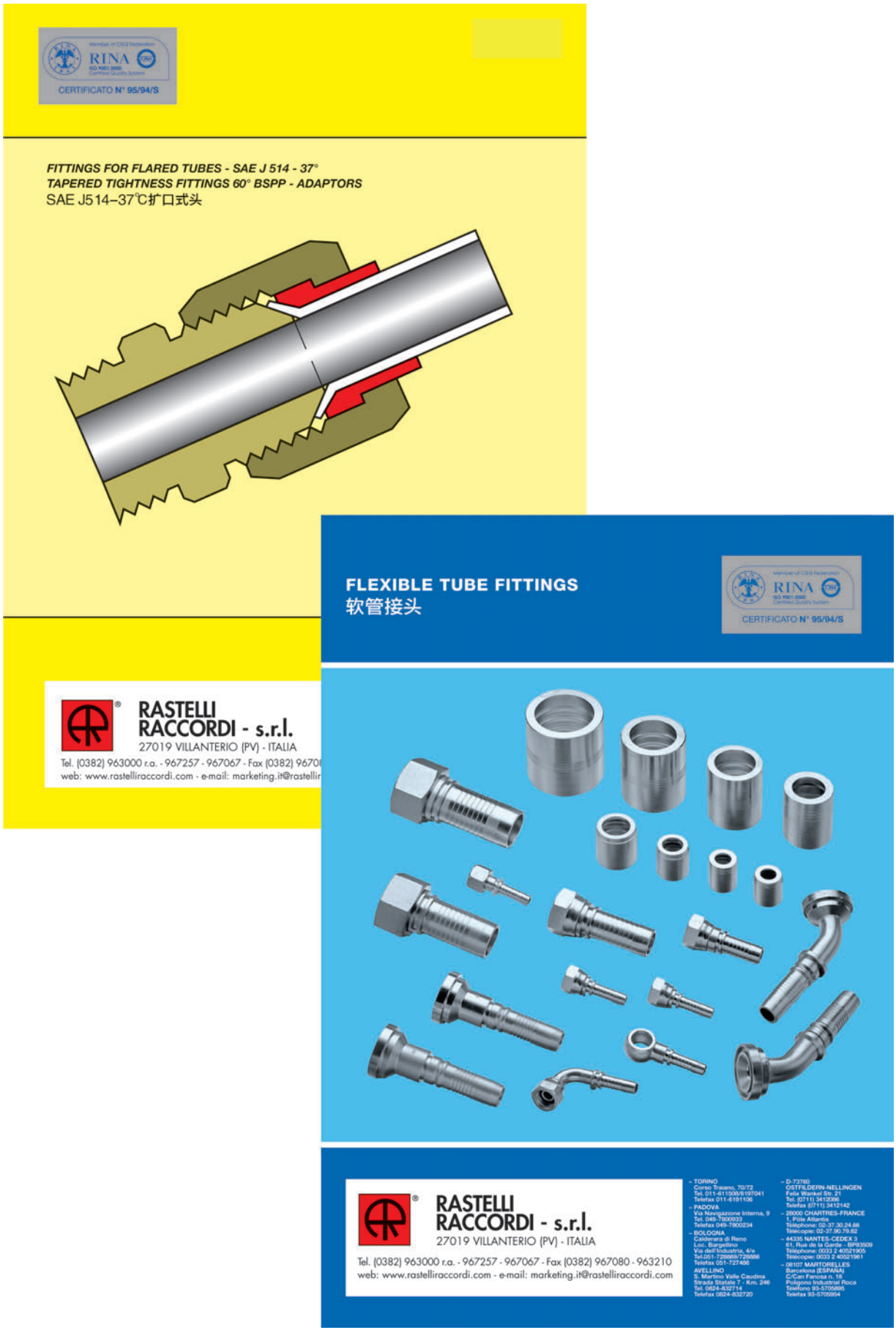
RINA
CERTIFICATO N° 95/94/S
FITTINGS FOR FLARED TUBES - SAE J 514 - 37°
TAPERED TIGHTNESS FITTINGS 60° BSPP - ADAPTORS
SAE J514–37°C扩口式头
RASTELLI
RACCORDI - s.r.l.
27019 VILLANTERIO (PV) - ITALIA
FLEXIBLE TUBE FITTINGS
软管接头
RINA
CERTIFICATO N° 95/94/S
RASTELLI
RACCORDI - s.r.l.
27019 VILLANTERIO (PV) - ITALIA
Tel. (0382) 963000 r.a. - 967257 - 967067 - Fax (0382) 967080 - 963210
web: www.rastelliraccordi.com - e-mail: marketing.it@rastelliraccordi.com

PIPE BENDING MACHINE
弯管机

TN 362

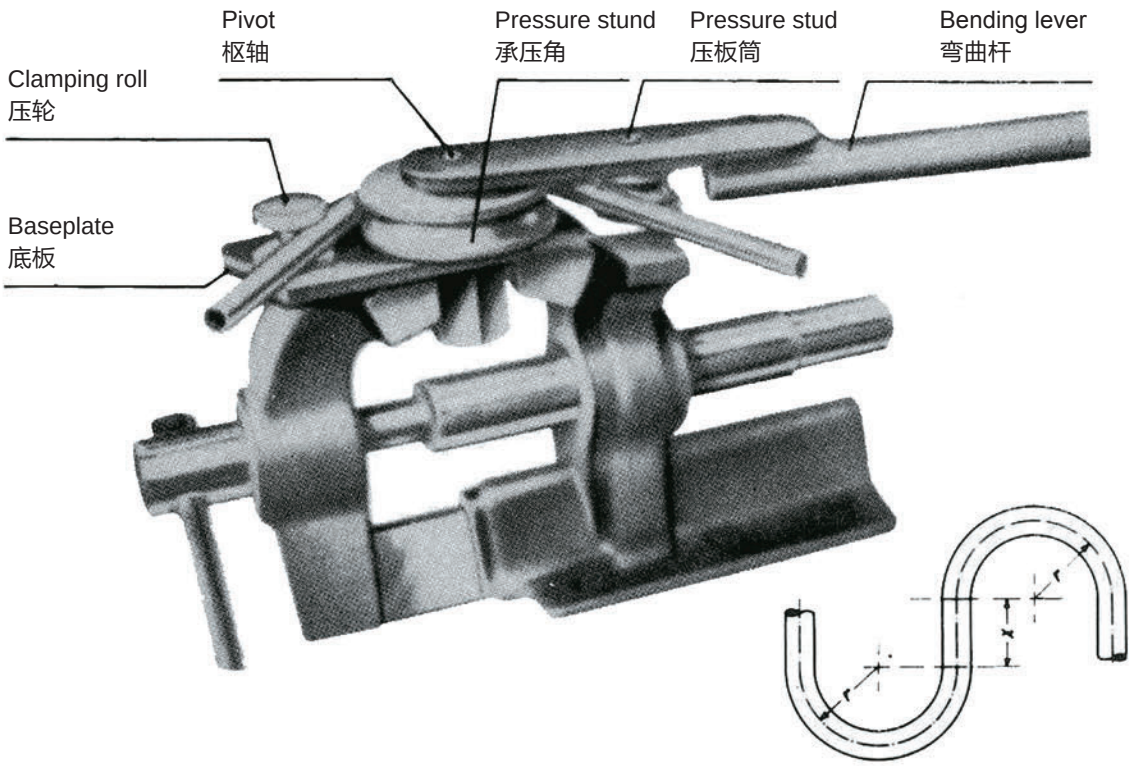

With 6 bending rollers for tubes with outside diameters from 6 to 18 mm.
适用管径6-18mm，具有6个可换弯管模。

Rollers for tube O.D. 弯模规格（管孔）	Gas Tube 英制管	r	~x
6	—	33	35
8		34	35
10	1/8"	35.5	35
12		36.5	35
14	1/4"	36.5	35

Rollers for tube O.D. 弯模规格（管孔）	Gas Tube 英制管	r	~x
15	—	44	38
16	—	44	38
18	3/8"	51.5	42

TN 294A

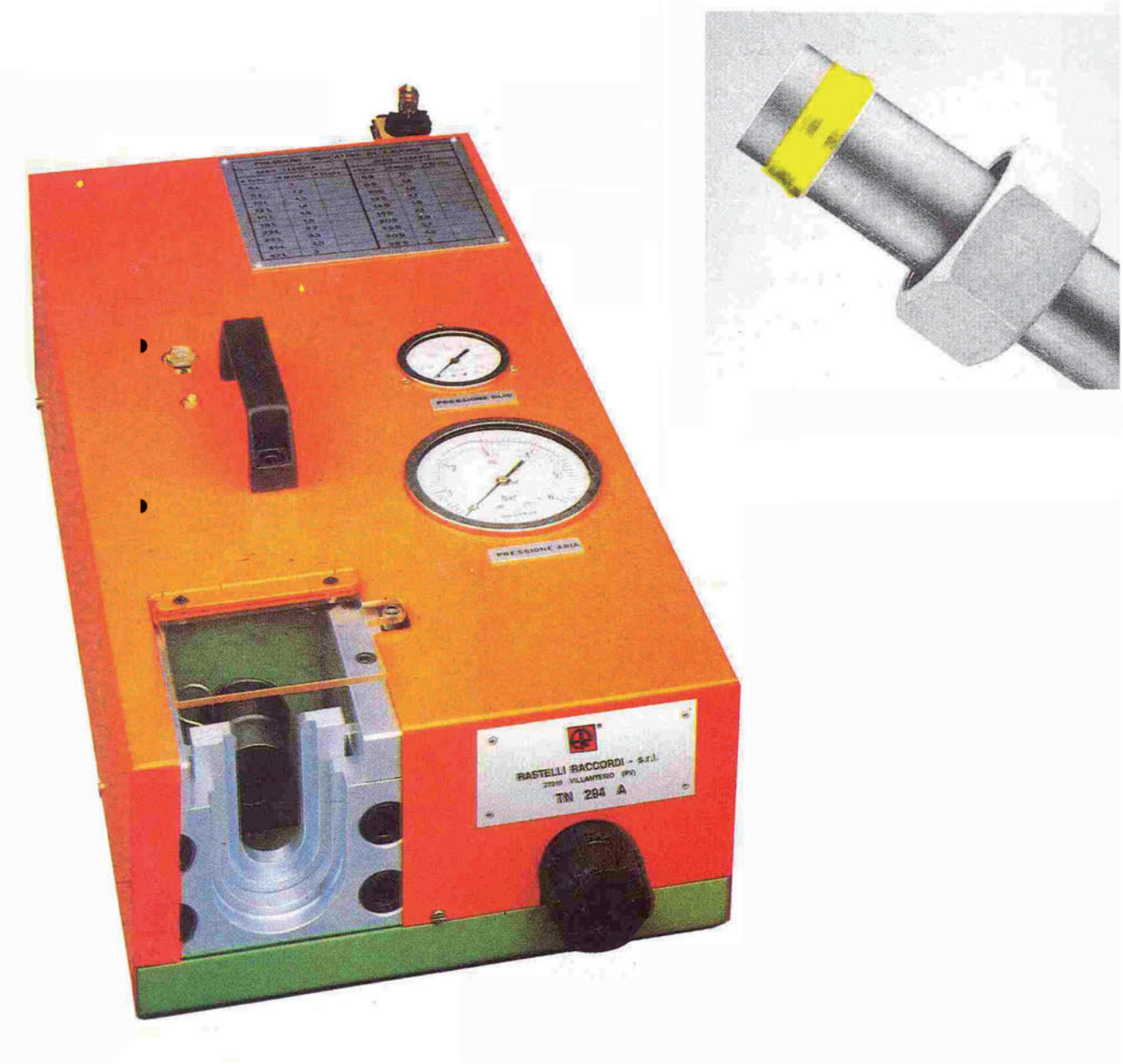

Pneumatic pre-assembly machine to attach cutting rings for pipe union to DIN 2353 - ISO 8434-1
DIN 2353 - ISO 8434-1卡套接头：
气动卡套预安装机

TN 285A

Tools for the pre-fitting of the cutting ring for
DIN 2353 - ISO 8434-1
Tools for swaging steel tube at 37°

DIN2353卡套预装机
37° 扩口式钢管扩口机

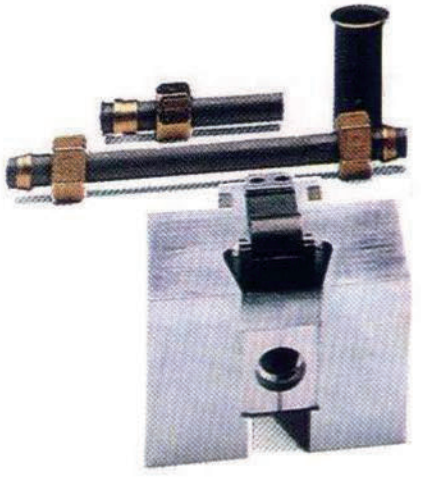

TN 285A

PRESSURE VALUE TABLE 压力表					
系列	Ø 钢管尺寸 (mm)	拧紧压力	系列	Ø 钢管尺寸 (mm)	拧紧压力
轻型 L	6 × 1	20	重型 S	6 × 1.5	20
	8 × 1	30		8 × 1.5	30
	10 × 1	35		10 × 1.5	35
	12 × 1.5	35		12 × 2	35
	15 × 1.5	40		14 × 2	40
	18 × 1.5	60		16 × 2	55
	22 × 2	70		20 × 2.5	80
	28 × 2	80		25 × 2.5	105
	35 × 2	100		30 × 3	130
	42 × 3	160		38 × 5	160

TOOLS AND GAUGES 工具和测量规

TN 196

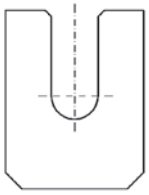

TN 286 A

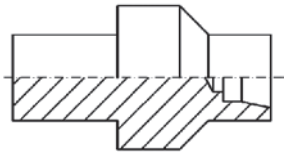

TN 287 A

系列	Ø 钢管外径 d_1	Part.No. 订货型号		
		内锥量规型号	钢管底座代号	Tapered form 锥度模具型号
轻型 L	6	TN 196 - 6 LS	TN 286 A - 6 L	TN 287 A - 6 L
	8	TN 196 - 8 LS	TN 286 A - 8 L	TN 287 A - 8 L
	10	TN 196 - 10 LS	TN 286 A - 10 L	TN 287 A - 10 L
	12	TN 196 - 12 LS	TN 286 A - 12 L	TN 287 A - 12 L
	15	TN 196 - 15 L	TN 286 A - 15 L	TN 287 A - 15 L
	18	TN 196 - 18 L	TN 286 A - 18 L	TN 287 A - 18 L
	22	TN 196 - 22 L	TN 286 A - 22 L	TN 287 A - 22 L
	28	TN 196 - 28 L	TN 286 A - 28 L	TN 287 A - 28 L
	35	TN 196 - 35 L	TN 286 A - 35 L	TN 287 A - 35 L
	42	TN 196 - 42 L	TN 286 A - 42 L	TN 287 A - 42 L
重型 S	6	TN 196 - 6 LS	TN 286 A - 6 S	TN 287 A - 6 S
	8	TN 196 - 8 LS	TN 286 A - 8 S	TN 287 A - 8 S
	10	TN 196 - 10 LS	TN 286 A - 10 S	TN 287 A - 10 S
	12	TN 196 - 12 LS	TN 286 A - 12 S	TN 287 A - 12 S
	14	TN 196 - 14 S	TN 286 A - 14 S	TN 287 A - 14 S
	16	TN 196 - 16 S	TN 286 A - 16 S	TN 287 A - 16 S
	20	TN 196 - 20 S	TN 286 A - 20 S	TN 287 A - 20 S
	25	TN 196 - 25 S	TN 286 A - 25 S	TN 287 A - 25 S
	30	TN 196 - 30 S	TN 286 A - 30 S	TN 287 A - 30 S
	38	TN 196 - 38 S	TN 286 A - 38 S	TN 287 A - 38 S

DIN 24° ED 圈

适用于系列产品: TN92GG-TN107GG-TN108GG-TN126GG-TN141GG-TN185GG-TN426

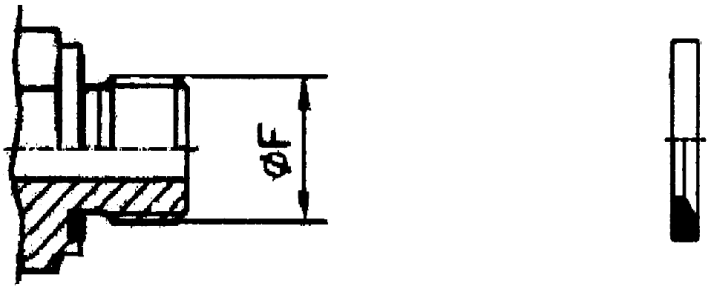

尺寸 ØF	产品代号	
	NBR 丁腈橡胶 硬度 90	FPM 氟橡胶 硬度 90
M10x1 - 1/8"GAS	232600501	239600501
M12 × 1.5	232600502	239600502
M14 × 1.5 - 1/4"GAS	232600503	239600503
M16 × 1.5	232600504	239600504
3/8"GAS	232600505	239600505
M18 × 1.5	232600506	239600506
M20 × 1.5	232600507	239600507
1/2"GAS	232600508	239600508
M22 × 1.5	232600509	239600509
M26 × 1.5 - M27 × 2 - 3/4"GAS	232600510	239600510
M33 × 2 - 1"GAS	232600511	239600511
M42 × 2 - 1"1/4GAS	232600512	239600512
M48 × 2 - 1"1/2GAS	232600513	239600513

DIN 24° O 型圈

适用于系列产品: TN299B-TN324-TN403-TN417-TN419-TN420-TN421-TN426-TN432-TN498

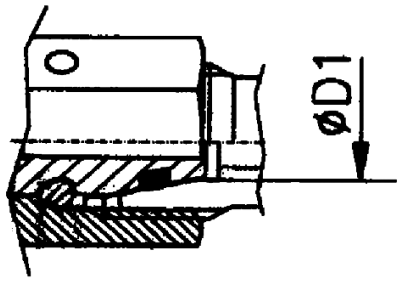

系列	Ø 钢管外径 D1	产品代号	
		NBR 丁腈橡胶 硬度 90	FPM 氟橡胶 硬度 90
轻型 L	6	23500001 OR 4 × 1.5	23550001 OR 4 × 1.5
	8	23500002 OR 6 × 1.5	23550002 OR 6 × 1.5
	10	23500003 OR 7.5 × 1.5	23550003 OR 7.5 × 1.5
	12	23500004 OR 9 × 1.5	23550004 OR 9 × 1.5
	15	23500006 OR 12 × 2	23550006 OR 12 × 2
	18	23500007 OR 15 × 2	23550007 OR 15 × 2
	22	23500009 OR 20 × 2	23550009 OR 20 × 2
	28	23500012 OR 26 × 2	23550012 OR 26 × 2
	35	23500013 OR 32 × 2.5	23550013 OR 32 × 2.5
	42	23500015 OR 38 × 2.5	23550015 OR 38 × 2.5
重型 S	6	23500001 OR 4 × 1.5	23550001 OR 4 × 1.5
	8	23500002 OR 6 × 1.5	23550002 OR 6 × 1.5
	10	23500003 OR 7.5 × 1.5	23550003 OR 7.5 × 1.5
	12	23500004 OR 9 × 1.5	23550004 OR 9 × 1.5
	14	23500005 OR 10 × 2	23550005 OR 10 × 2
	16	23500006 OR 12x2	23550006 OR 12 × 2
	20	23500008 OR 16.3 × 2.4	23550008 OR 16.3 × 2.4
	25	23500010 OR 20.3 × 2.4	23550010 OR 20.3 × 2.4
	30	23500011 OR 25.3 × 2.4	23550011 OR 25.3 × 2.4
	38	23500014 OR 33.3 × 2.4	23550014 OR 33.3 × 2.4

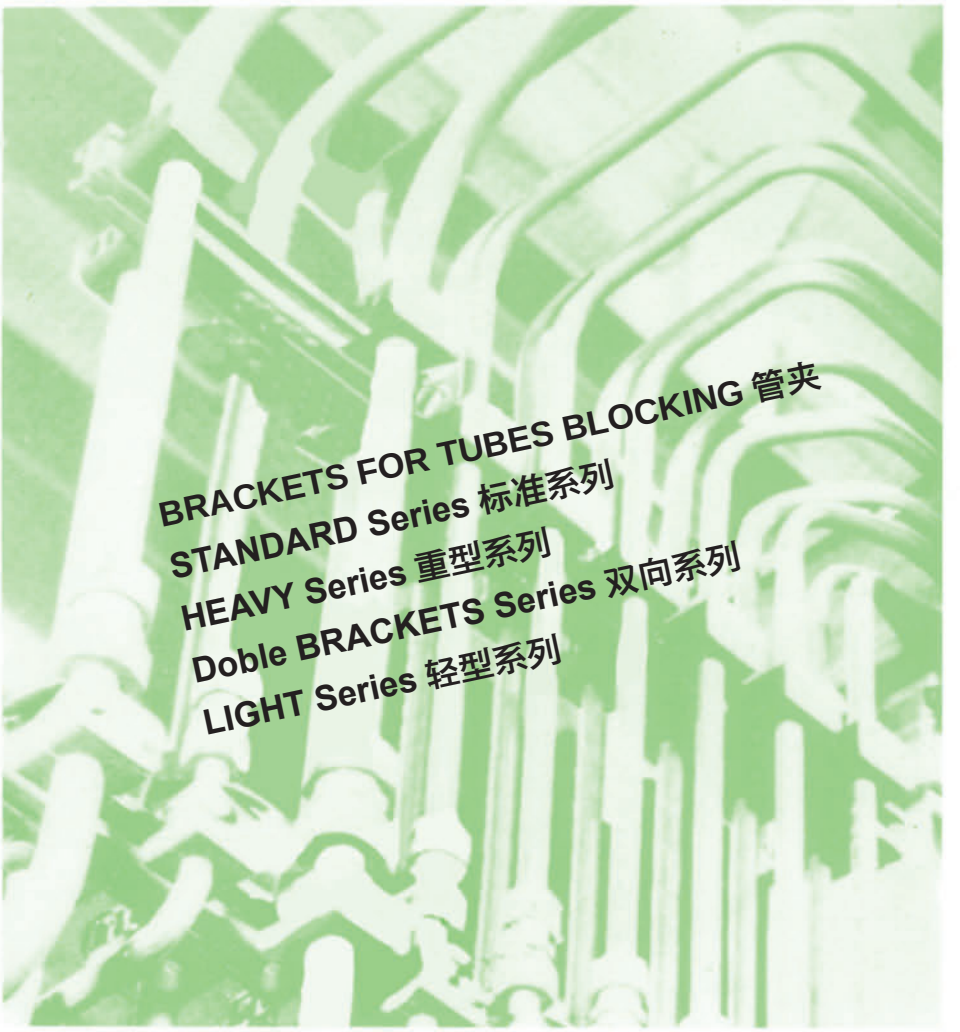

BRACKETS FOR TUBES BLOCKING 管夹

STANDARD Series 标准系列

HEAVY Series 重型系列

Doble BRACKETS Series 双向系列

LIGHT Series 轻型系列

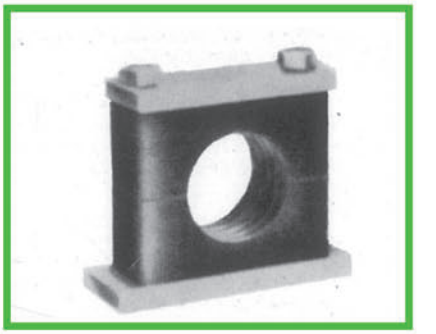

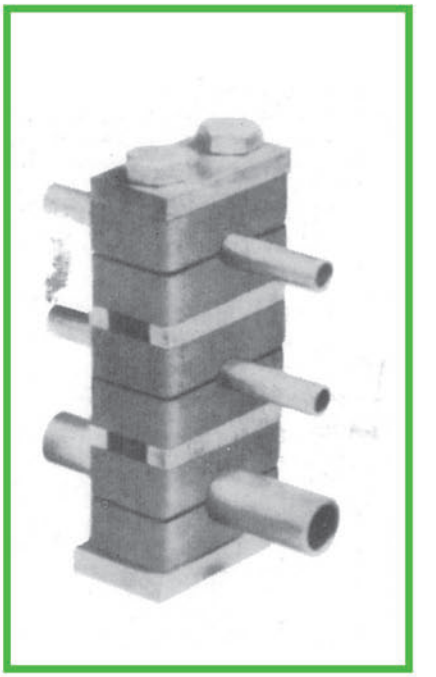

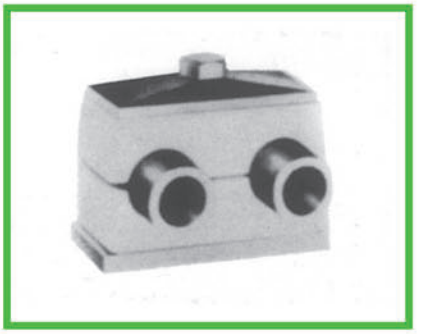

DESCRIPTION
产品描述

The RASTELLI-clamp is suitable for fitting pipes, hoses and electrical cables. The installation of individual pipes, multiple pipe runs and hoses in industrial hydraulic applications becomes easy and clean by using RASTELLI-clamps. They are also suitable for fitting electric cables. The upper and lower jaw of each clamp are always identical. The clamp jaw material is Polypropylen for the standard model. For special applications Polyamid and Aluminium are available. The RASTELLI-clamp in Aluminium is mainly used in reactor constructions, foundries, steel works and for all applications where very high or very low temperatures occur.

Rastelli 管夹适用于金属管，软管及电览及其他构件选择 Rastelli 管夹安装于各种工业管道的液压应用领域是一种实用轻松的方式，管夹的上下部分完全相同，从而也广泛应用于电览设备的安装，标准型管夹采用聚丙烯材质，其他特殊应用采用聚西先胺和铝质材料。Rastelli 铝材管夹多用于反应堆建设，铸造下钢铁其对机械和温度有不同要求的特殊领域。

ADVANTAGES
优点

Clamping jaws can be fitted into the base plates and welded into position, since the plates are winder than the jaws. The jaws of the RASTELLI-clamps are ribbed and thus very strong. The ribs in the gripping surface guaranty resilience to shocks.

管夹的显著优点可以与焊接底板焊接在准确的位置，管夹孔内的腹筋提供可靠的高抗拉强度及抗振动强度。

ASSEMBLING
安装指南

A preliminary condition for a safe assembling is a firm bloking of the base-plate, which must be suitable to stresses. The curves must be welded just after the curve.

安全安装的基础条件是每个牢固的底盘能够承受高托拉强度和抗振强度。

The RASTELLI-clamp must be installed at a distance from 1 to 1,5 m.

Rastelli 管夹的安装距离我们建议在 1-1.5 米。

CHARACTERISTICS OF THE SYNTHETIC CLAMP JAWS
管夹性能

Mechanical features 机械性能		RPP 聚丙烯	RUL 聚酰胺
Yeld stress 拉伸力	DIN 53455	30 N/mm²	55 ÷ 82 N/mm²
Ultimate bending stress 弯曲力	DIN 53452	54 N/mm²	145 N/mm²
Impact stress 冲击力	DIN 53453	no break	no break
Thermal features 热性能			
Temperature resistance 耐溢性		–30 ÷ + 90℃	–40 ÷ + 140℃
Coefficient of thermal expansion 热膨胀系数		1,5 × 10-4/℃	7 to 10 × 10^{-5}/℃
Electrical features 电气性能			
Current flow resistance 电流阻力	DIN 53482 VDE 0303	1016 Ohm × cm.	1015 Ohm × cm.
Creep current limit 蠕变中流限制	DIN 53480 VDE 0303	2kA 3 c	kA 3 b
Ultimate strength values 极限强度值		**RALU (Temp max 300℃) 铝（最大耐温 300℃)**	
Tensile strength 拉伸强度		160-200 N/mm²	
Pressure strength 抗压强度		HB 600-750 N/m²	
E-module 弹性模量		68000-78000 N/mm²	

RANGE
系列

RASTELLI clamps are available in heavy and light versions. The type selected is dependent upon the load. Our recommendation:

Rastelli 管夹分为重系列与轻系列，根据对应管夹承载力选择需要，我们建议如下：

heavy range for high pressure hydraulics, rugged operation, for intermittant loads and high oil speeds;

重型管夹主要用于高压液压设备，崎岖操作，间歇负载及高速滑油；

light range for standard hydraulics, general pipe construction and electrical lines.

轻型管夹用于标准液压系统，管道建设及电缆行业。

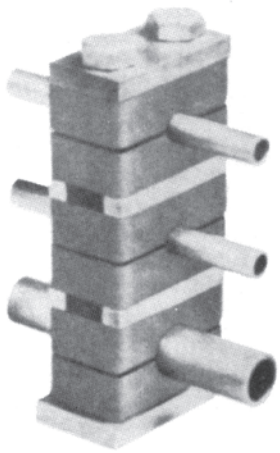

材质	
焊接底座	37 号钢
管夹体	聚丙烯，聚酰胺，铝
盖板	37 号钢
六角螺枪	50 号钢
螺母	50 号钢
其他金属配件	37 号钢

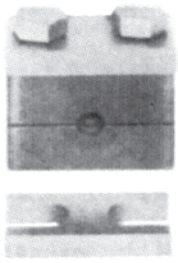

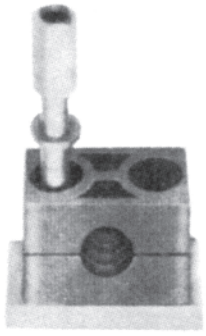

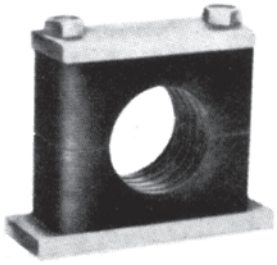

Heavy range
加强结构系列管夹

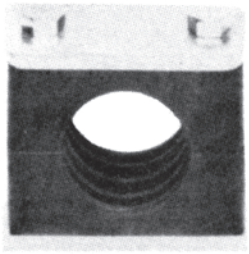

Standard series
标准结构系列管夹

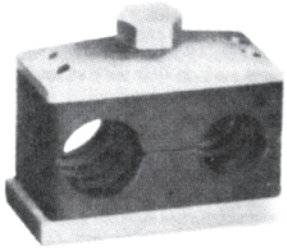

Twin clamp
双联结构系列管夹

STANDARD SERIES
标准结构系列管夹

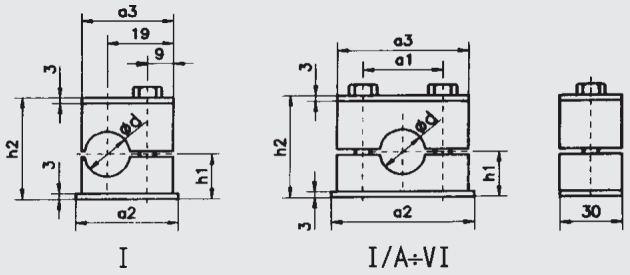

系列	Ø 钢管外径	尺寸						RDSPV - RRAP							
		a1	a2	a3	h1	h2	h3	e1	e2	e3	e4	e5	e6	L	L1
I	6 - 12	–	30	28	16	32	29	–	30	30	9.5	12	22	63	308
I/A	6 - 12	20	35	34	16	32	29	17.5	35	20	7.5	12	22	70	359
II	12.7 - 18	26	43	40	19.5	39	36	21.5	43	26	8.5	12	25	86	437
III	19 - 25.4	33	50	48	20.5	41	38	26	52	33	9.5	12.5	29	104	526
IV	26.6 - 30	40	59	57	24	48	45	30	60	40	10	12.5	32.5	120	305
V	32 - 42	52	72	70	32	64	61	37.5	75	52	11.5	14	40	150	380
VI	44.5 - 50.8	66	88	86	36	72	69	45	90	66	12	15	48	180	456

RDSPV I/A ÷ VI

Base plate to weld - Series double
焊接板：双管夹焊接系列

RRAP I ÷ VI

Base plate to weld - Series multiple
焊接板：多管夹焊接系列

Rail
安装导轨

RTS 095 (11)
RTS 096 (14)
RTS 097 (30)

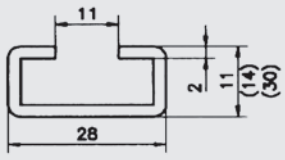

Available in 2 m length
可提供 2 米长导轨

Bayonet nut
导轨螺母

RSM I ÷ VI

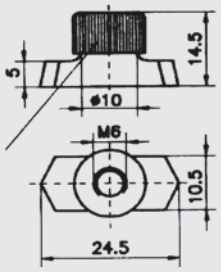

Reinforcing bush
锁紧垫圈

I-VI

REP(Mat. RPP)
RES(Mat. Fe/St37)

系列	Ø 钢管外径 d 公制 mm	螺纹管	英寸 Inches	材质 聚丙烯 RPP	材质 聚酰胺 RUL	材质 铝 RALU	管夹体 Clamp	底板 Base Plate	保险片 Locking Plate	盖板 Cover Plate	外六方螺栓 Ext.Hex Screw	内六方螺栓 Int. Hex Screw 1)	槽口螺栓 Slotted Screw 1)	叠加螺栓 Build-up Screw
I	6	–	–	☒	☒		106	RSP I RSPV I 3)	RSI I	RDP I	RAS/DP- I M6 × 30	RIS- I M6 × 20 RIS/DP- I M6 × 30 2)	RLI- I M6 × 20	RAF-I M6
	6.4	–	1/4"				1064							
	8	–	5/16"	☒	☒		108							
	9.5	–	3/8"				1095							
	10	G1/8"	–	☒	☒		110							
	12	–	–	☒	☒		112							
I/A	6	–	–	☒	☒	☒	106A	RSP I/A RSPV I/A 3)	RSIG I/A	RDP I/A				
	6.4	–	1/4"	☒			1064A							
	8	–	5/16"	☒	☒	☒	108A							
	9.5	–	3/8"	☒			1095A							
	10	G1/8"	–	☒	☒	☒	110A							
	12	–	–	☒	☒	☒	112A							
			–											
II	12.7	–	1/2"	☒			2127	RSP II RSPV II 3)	RSIG II	RDP II	RAS-III M6 × 35	RIS-II M6 × 25 RIS/IV M6 × 35 2)	RLI-II M6 × 25	RAF-II M6
	13.7	G1/4"	–	☒	☒	☒	2137							
	14	–	–	☒	☒	☒	214							
	15	–	–	☒	☒	☒	215							
	16	–	5/8"	☒	☒	☒	216							
	17.1	G3/8"	—	☒	☒	☒	2171							
	18	–	–	☒	☒	☒	218							
III	19		3/4"	☒			319	RSP III RSPV III 3)	RSIG III	RDP III	RAS/DP-III M6 × 40 RAS-III M6 × 35 4)	RIS-III M6 × 30 RIS/DP-III M6 × 40 2)	RLI-III M6 × 30	RAF-III M6
	20	–	–	☒	☒	☒	320							
	21.3	G1/2"	–	☒	☒	☒	3213							
	22	–	–	☒	☒	☒	322							
	23	–	–				323							
	25	–	–	☒	☒	☒	325							
	25.4	–	1"	☒			3254							
IV	26.6	G3/4"	–	☒	☒	☒	4266	RSP IV RSPV IV 3)	RSIG IV	RDP IV	RAS/DP-IV M6 × 45 RAS-IV M6 × 42 4)	RIS-IV M6 × 35 RIS/DP-IV M6 × 45 2)	RLI-IV M6 × 35	RAF-IV M6
	28	–	–	☒		☒	428							
	30	–	–	☒	☒	☒	430							
V	32	–	1"1/4	☒	☒	☒	532	RSP V RSPV V 3)	RSIG V	RDP V	RAS-DP-V M6 × 60	RIS-V M6 × 50 RIS-VI M6 × 40 2)	RLI-V M6 × 50	RAF-V M6
	33.7	G1"	–	☒	☒	☒	5337							
	35	–	–	☒	☒	☒	535							
	38	–	1"1/2	☒	☒	☒	538							
	40	–	–	☒	☒		540							
	42	G1"1/4	–	☒	☒	☒	542							
VI	44.5	–	1"3/4	☒			6445	RSP VI RSPV VI 3)	RSIG VI	RDP VI	RAS/DP-VI M6 × 70 RAS-VI M6 × 65 4)	RIS-VI M6 × 60 RIS/DP-VI M6 × 70 2)	RLI-VI M6 × 60	RAF-VI M6
	48.3	G1"1/2	–	☒	☒	☒	6483							
	50.8	–	2"	☒			6508							

☒ (1) Measures usually foreseen in stock 有库存

Complete clamps“Model”标准结构系列管夹及配件组合

The complete clamps in aluminium are without screws RLI and with screws RAS and insert sleeve RES
铝材管夹不含外六方螺栓（RAS），槽口螺栓（RLI）及锁紧垫圈（RES）

A

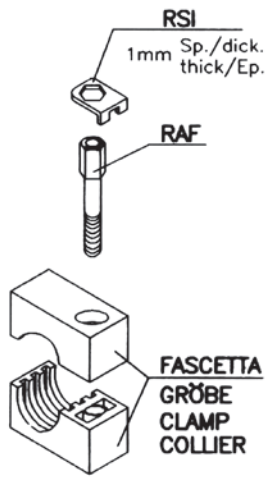

B

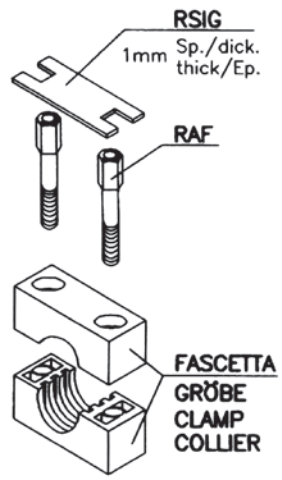

C

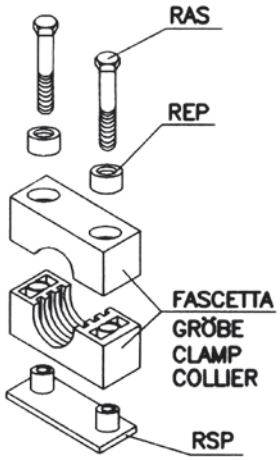

C1

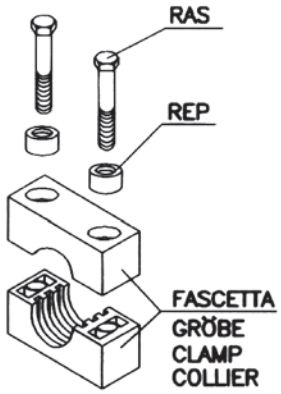

C2

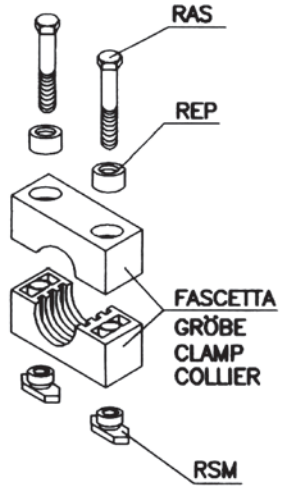

D

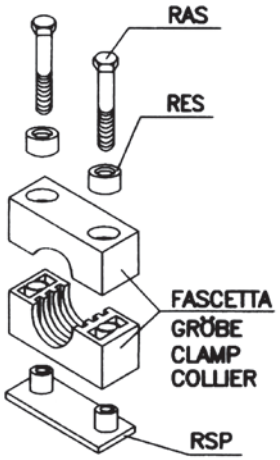

D1

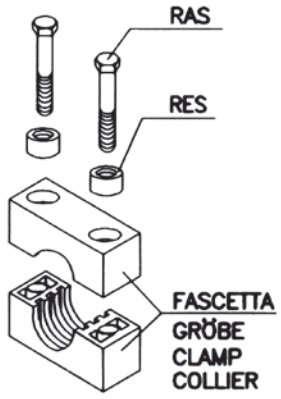

D2

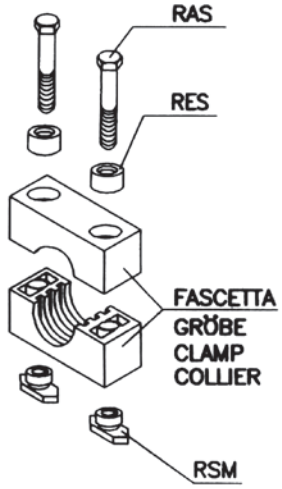

Complete clamps “Model”标准结构系列管夹及配件组合

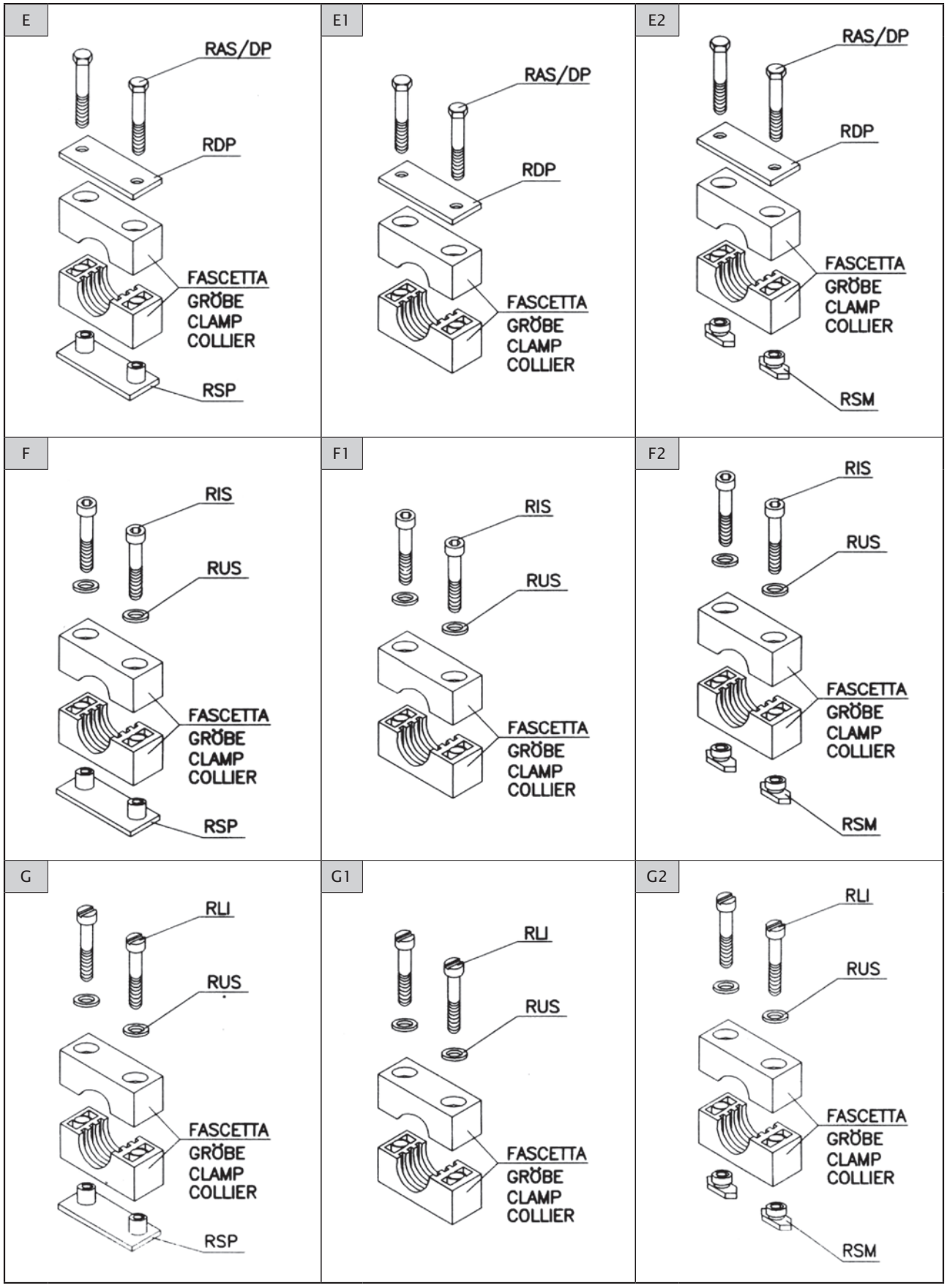

Complete clamps“Model”标准结构系列管夹及配件组合

H

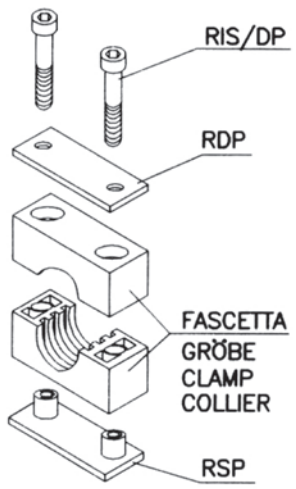

H1

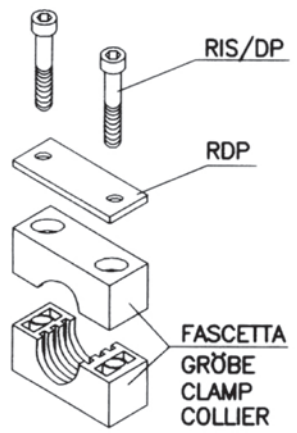

H2

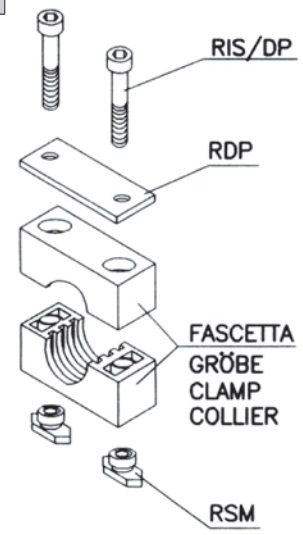

C3

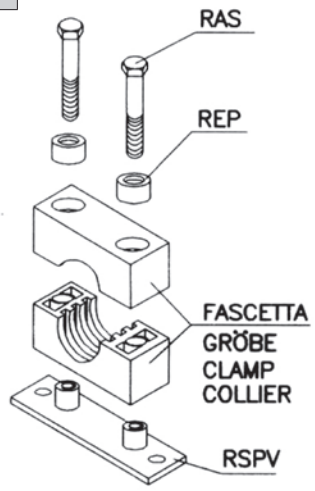

D3

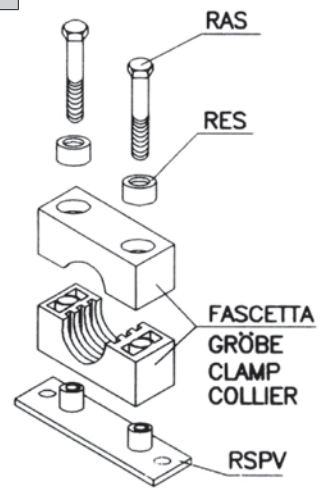

E3

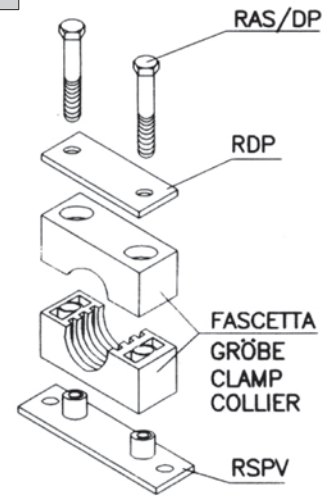

F3

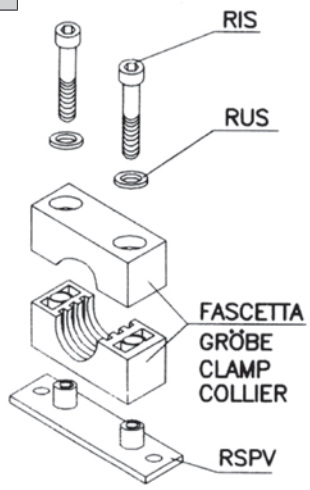

G3

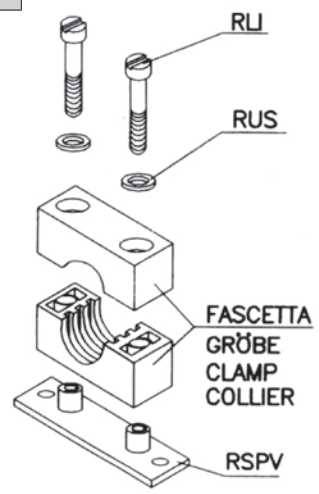

H3

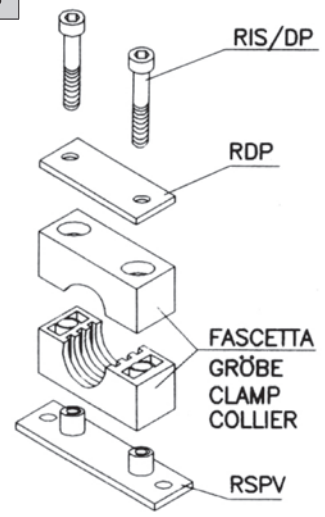

HEAVY SERIES
加强型结构系列

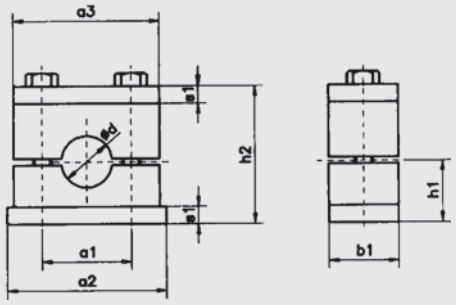

系列	Ø 钢管外径 d	尺寸						
		a1	a2	a3	b1	h1	h2	s1
IIIS	6 - 18	33	70	55	30	24	48	8
IVS	19 - 30	45	85	70	30	32	64	8
VS	30 - 42	60	100	85	30	38	76	8
VIS	38 - 70	90.5	140	115	45	55	110	10
VIIS	66 - 88.9	122	180	152	60	70	140	10
VIIIS	96 - 114.3	168	225	205	80	100	200	15
IXS	136 - 168	205	270	252	90	115	230	15

Rail
安装导轨

RSTSV 100

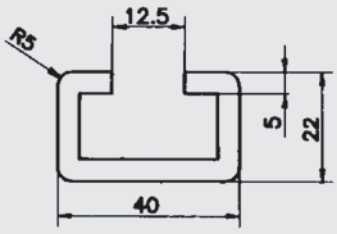

Available in 2 m length
可提供 2 米长导轨

Bayonet nut
导轨螺母

RGMV 10 IIIS ÷ VS

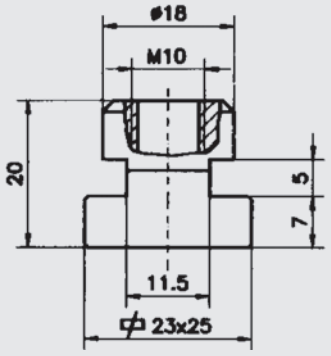

Bayonet nut
导轨螺母

RGMV 12 VIS

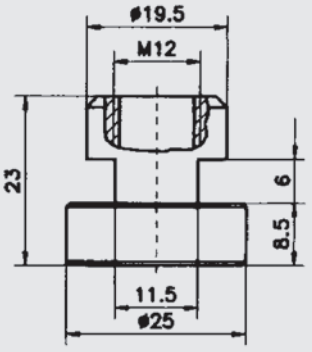

系列	Ø 钢管外径 d			配件型号									
	公制 mm	螺纹尺寸	英寸 Inches	材质			管夹体 Clamp	底板 Base Plate	保险片 Locking Plate	盖板 Cover Plate	外六方螺栓 Ext.Hex Screw	内六方螺栓 Int. Hex Screw	叠加螺栓 Build-up Screw
				聚丙烯 RPP	聚酰胺 RUL	铝 RALU							
IIIS	6	–	–	☒			3006	RSPAL IIIS	RSIP IIIS	RDPAL IIIS	RAS-IIIS M10 × 45	RIS-IIIS M10 × 45	RAF-IIIS M10
	6.4	–	1/4"				30064						
	8	–	5/16"	☒			3008						
	9.5	–	3/8"				30095						
	10	G1/8"	–	☒			3010						
	12	–	–	☒			3012						
	12.7	–	1/2"				30127						
	13.7	G1/4"	–				30137						
	14	–	–	☒			3014						
	15	–	–	☒			3015						
	16	–	5/8"	☒			3016						
	17.1	G3/8"	–	☒			30171						
	18	–	–	☒			3018						
IVS	19	–	3/4"				4019	RSPAL IVS	RSIP IVS	RDPAL IVS	RAS-IVS M10 × 60	RIS-IVS M10 × 60	RAF-IVS M10
	20	–	–	☒			4020						
	21.3	G1/2"	–	☒			40213						
	22	–	–	☒			4022						
	25	–	–	☒			4025						
	25.4	–	1"				40254						
	26.6	G3/4"	–	☒			40266						
	28	–	–	☒			4028						
	30	–	–	☒			4030						
VS								RSPAL VS	RSIP VS	RDPAL VS	RAS-VS M10 × 70	RIS-VS M10 × 70	RAF-VS M10
	30	–	–	☒			5030						
	32	–	1"1/4	☒			5032						
	33.7	G1"	–	☒			50337						
	35	–	–	☒			5035						
	38	–	1"1/2	☒			5038						
	40	–	–	☒			5040						
	42	G1"1/4	–	☒			5042						
VIS	38	–	1"1/2	☒			6038	RSPAL VIS	RSIP VIS	RDPAL VIS	RAS-VIS M12 × 100	RIS-VIS M12 × 100	RAF-VIS M12
	42	G1"1/4	–	☒			6042						
	44.5	–	1"3/4	☒			60445						
	48.3	G1"1/2	–	☒			60483						
	50.8	–	2"				60508						
	54	–	–	☒			6054						
	57	–	2"1/4				6057						
	60.3	G2"	–	☒			60603						
	63.5	–	2"1/2	☒			60635						
	65	–	–				6065						
	70	–	–	☒			6070						
VIIS								RSPAL VIIS	RSIP VIIS	RDPAL VIIS	RAS-VIIS M16 × 130	RIS-VIIS M16 × 130	RAF-VIIS M16
	66	–	–				7066						
	70	–	–	☒			7070						
	73	–	–	☒			7073						
	76.1	G2"1/2	3"	☒			70761						
	80	–	–	☒			7080						
	88.9	G3"	3"1/2	☒			70889						
VIIIS	81	–	–	☒			8100	RSPAL VIIIS	RSIP VIIIS	RDPAL VIIIS	RAS-VIIIS M20 × 190	RIS-VIIIS M20 × 190	RAF-VIIIS M20
	101.6	G3"1/2	4				81016						
	108	–	4"1/4	☒			8108						
	114.3	G4"	4"1/2	☒			81143						
	130	–	–	☒			8130						
IXS	139.7	G5"	5" 1/2				91397	RSPAL IXS	RSIP IXS	RDPAL IXS	RAS-IXS M24 × 220	RIS-IXS M24 × 220	RAF-IXS M24
	165.1	–	–				91651						
	168.3	G6"	6" 1/2				91683						

☒ (1) Measures usually foreseen in stock 有库存

Complete clamps“Model”加强型系列管夹及配件组合

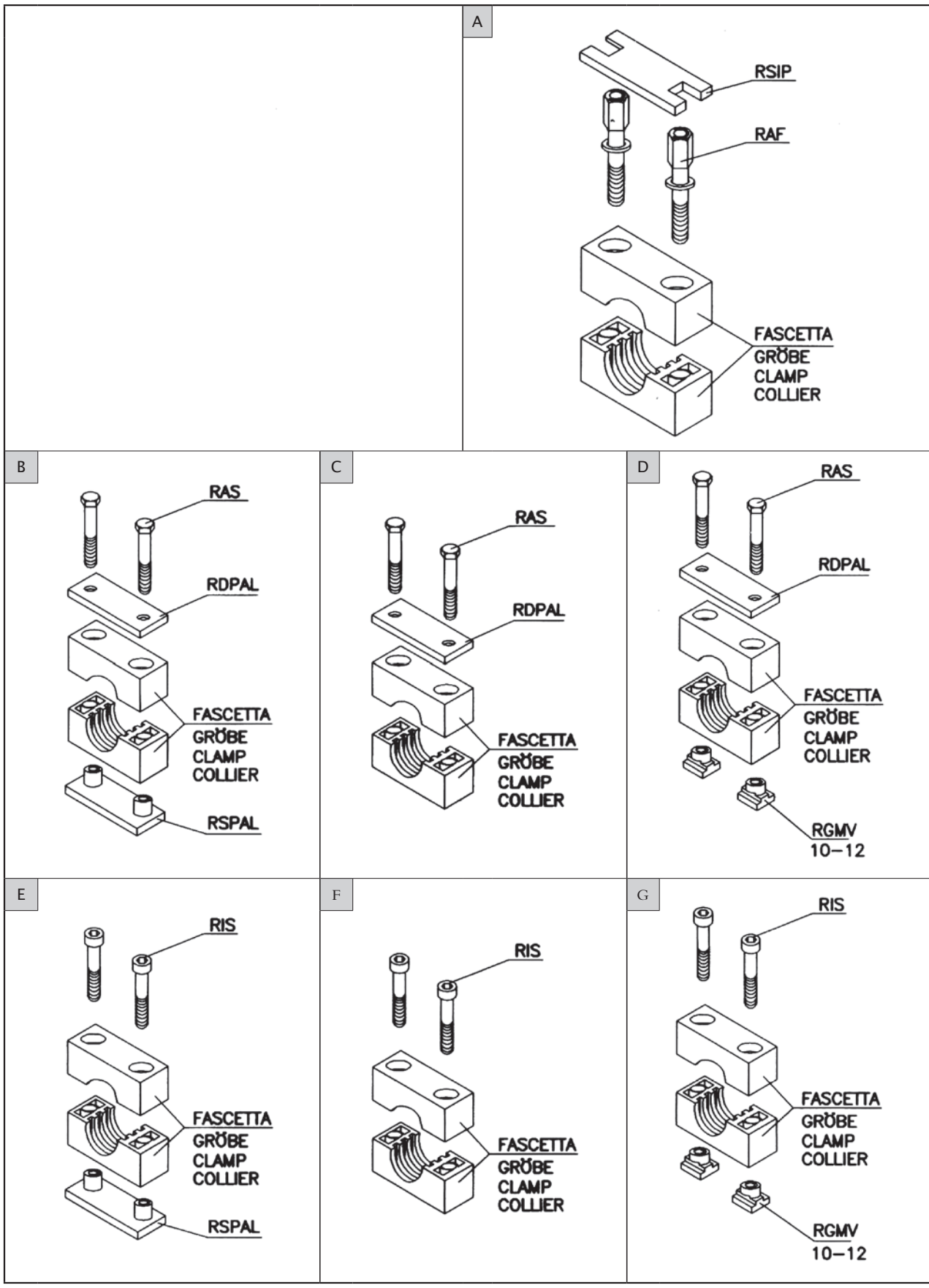

DOUBLE SERIES RDS
双联式系列

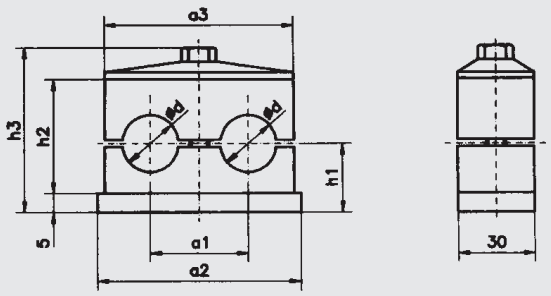

系列	Ø 钢管外径 d	尺寸						尺寸			Ø 钢管外径 d
		a1	a2	a3	h1	h2	h3	e1	e2	L	
I	6 - 12	20	37	36	18.5	27	43	18	40	196	M6
II	12.7 - 18	29	55	53	18	26	43.5	28	58	288	M8
III	19 - 25.4	36	70	67	23.5	37	54.5	35	72	358	M8
IV	26.6 - 30	45	85	82	26	42	59.5	43	90	446	M8
V	32 - 42	56	110	106	32	54	71.5	55	112	558	M8

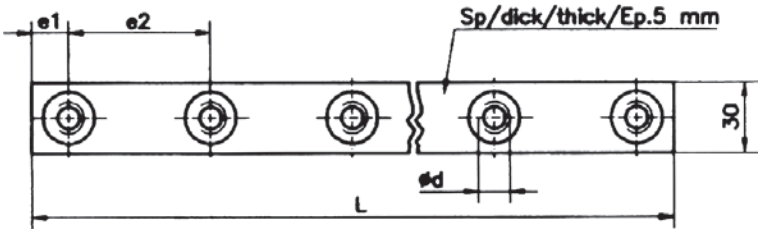

RDS-RRAP I ÷ VI

Base plate to weld - Series multiple
焊接底座 - 双联式

Rail
安装导轨

RTS 097 (30)

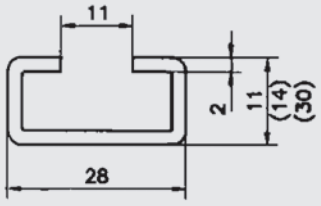

Available in 2 m length
可提供 2 米长导轨

Bayonet nut
导轨螺母

RSM 6 (I)

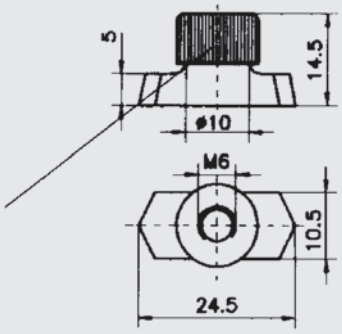

Plastic cap ribbed
塑料帕

Bayonet nut
导轨螺母

RDS-RSM 8 (II ÷ V)

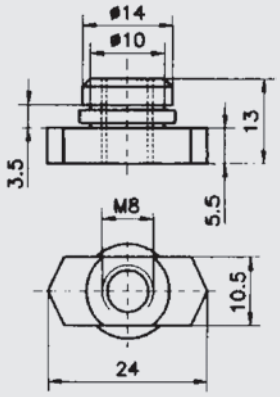

系列	Ø 钢管外径 d			配件型号							
	公制 mm	螺纹管	英寸 Inches	材质 聚丙烯 RPP	材质 聚酰胺 RUL	管夹体 Clamp	底座 Base Plate	保护片 Locking Plate	盖板 Cover Plate	外六方螺枪 Ext.Hex Screw	叠加螺栓 Build-up Screw
I	6	–	–	☒		106/06	RDS-RSP I	RDS-RSI I	RDS-RGD I	RAS-III M6 × 35	RDS-RAF I M6
	6.4	–	1/4"			1064/64					
	8	–	5/16"	☒	☒	108/08					
	9.5	–	3/8"			1095/95					
	10	G1/8"	–	☒	☒	110/10					
	12	–	–	☒	☒	112/12					
II	12.7	–	1/2"	☒		2127/127	RDS-RSP II	RDS-RSI II-V	RDS-RGD II	RDS-RAS II M8 × 35	RDS-RAF II M8
	13.7	G1/4"	–	☒		2137/137					
	14	–	–	☒		214/14					
	15	–	–	☒		215/15					
	16	–	5/8"	☒		216/16					
	17.1	G3/8"	–	☒		2171/171					
	18	–	–	☒		218/18					
III	19	–	3/4"	☒		319/19	RDS-RSP III		RDS-RGD III	RDS-RAS III M8 × 45	RDS-RAF III M8
	20	–	–	☒		320/20					
	21.3	G1/2"	–	☒		3213/213					
	22	–	–	☒		322/22					
	23	–	–			323/23					
	25	–	–	☒		325/25					
	25.4	–	1"			3254/254					
IV	26.6	G3/4"	–	☒		4266/266	RDS-RSP IV		RDS-RGD IV	RDS-RAS IV M8 × 50	RDS-RAF IV M8
	28	–	–	☒		428/28					
	30	–	–	☒		430/30					
V	32	–	1"1/4	☒		532/32	RDS-RSP V		RDS-RGD V	RDS-RAS V M8 × 60	RDS-RAF V M8
	33.7	G1"	–	☒		5337/337					
	35	–	–	☒		535/35					
	38	–	1"1/2	☒		538/38					
	40	–	–	☒		540/40					
	42	G1"1/4	–	☒		542/42					

☒ (1) Measures usually foreseen in stock 有库存

Complete clamps“Model”双联式系列管夹及配件组合

A

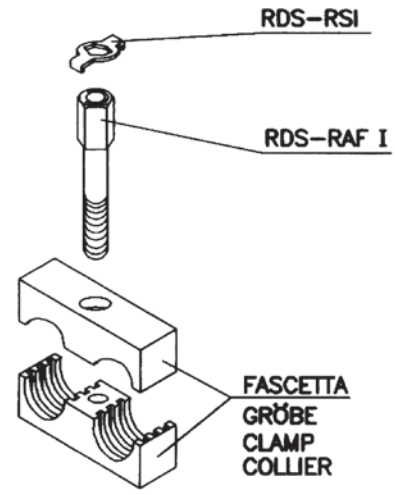

B

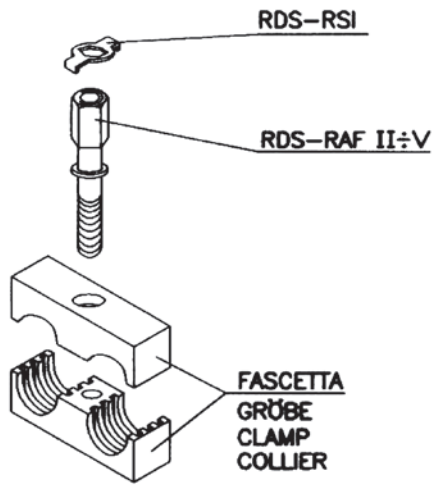

C

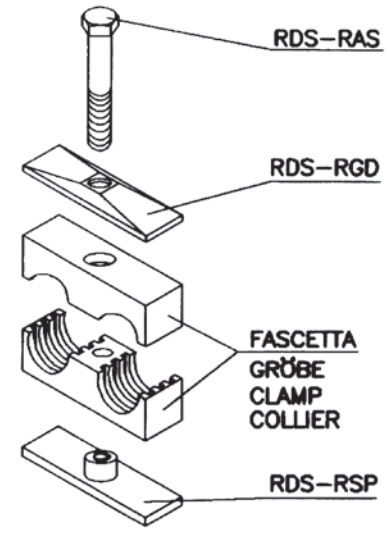

D

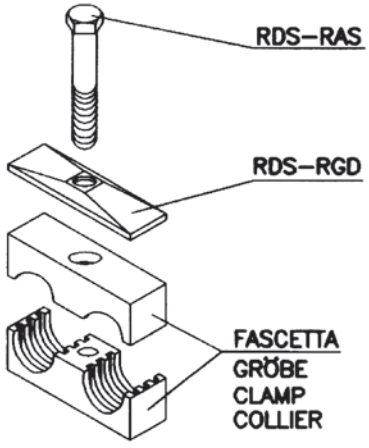

E

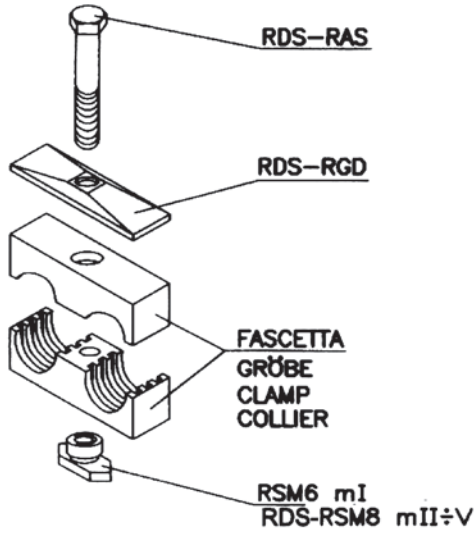

LIGHT RANGE - 轻系列

系列	Ø 钢管外径 d			产品型号			
	公制 mm	螺纹管	英寸 Inches	材质 聚丙烯 RPP	管夹体 Clamp RLB	材质 聚丙烯 RPP	管夹体 RLBG
I	4	—	—		RLB 4		RLBG 4/4
	6	—	—		RLB 6		RLBG 6/6
	8	—	5/16		RLB 8		RLBG 8/8
II	10	—	—		RLB 10		RLBG 10/10
	12	—	—		RLB 12		RLBG 12/12
III	13	—	—		RLB 13		—
	14	—	—		RLB 14		RLBG 14/14
	15	—	—		RLB 15		RLBG 15/15
	16	—	—		RLB 16		RLBG 16/16
	17.1	G3/8 "	—		RLB 171		—
	18	—	—		RLB 18		RLBG 18/18
IV	19.1	—	3/4		RLB 191		—
	20	—	—		RLB 20		RLBG 20/20
	21.3	G1/2 "	—		RLB 213		—
	22	—	—		RLB 22		RLBG 22/22
	23	—	—		RLB 23		—
	25	—	—		RLB 25		RLBG 25/25

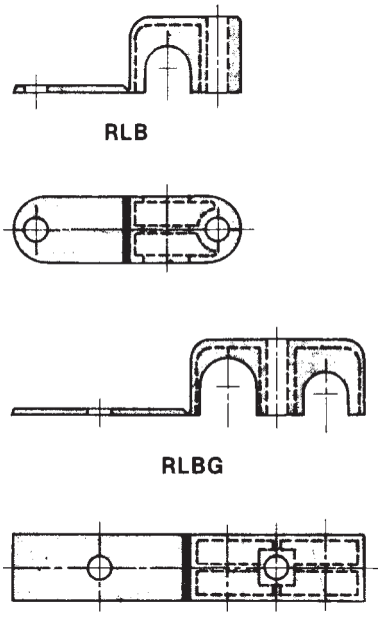

☒ (1) Measures usually foreseen in stock 有库存

Member of CISQ Federation
RINA
ISO 9001:2000
Certified Quality System
CERTIFICATO N° 95/94/S

CAT. 2D11

FITTINGS FOR FLARED TUBES - SAE J 514-37°
SAE J 514-37° 扩口式管接头
TAPERED TIGHTNESS FITTINGS 60° BSPP - ADAPTORS
英制 60° 锥密封过渡管接头

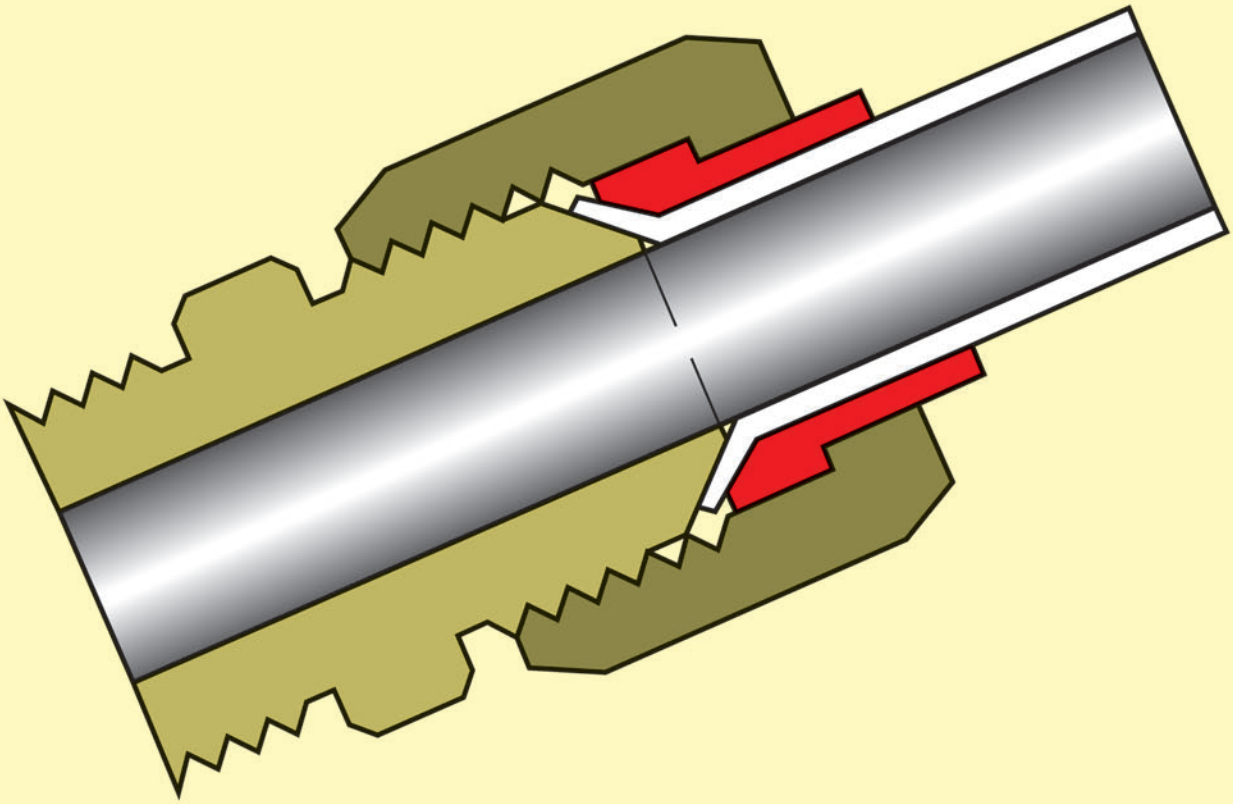

RASTELLI RACCORDI - s.r.l.
27019 VILLANTERIO (PV) - ITALIA
Tel (+39) 0382.963000 r.a - 967257 - 967067 - Fax (+39) 0382.963210 - 967080
e-mail: marketing.it@rastelliraccordi.it - web: www.rastelliraccordi.com
e-mail: administration.it@rastelliraccordi.it

- TORINO
  Corso traiano, 70/72
  Tel. 011-611508/6197041
  Telefax 011-6191106
- PADOVA
  Via Navigazione Interna, 9
  Tel. 049-7800933
  Telefax 049-7800234
- BOLOGNA
  Calderara di Reno
  Loc. Bargellino
  Via dell'Industria, 4/e
  Tel. 051-728889/728886
  Telefax 051-727486
- AVELLINO
  S.Martino Valle Caudina
  Strada Statale 7 - Km. 246
  Tel. 0824-832714
  Telefax 0824-832720
- D-73760
  OSTFILDERN-NELLINGEN
  Felix Wankel Str. 21
  Tel. (+49) 711-3412086
  Telefax (+49) 711-3412142
- 28000 CHARTRES-FRANCE
  1 Pôle Atlantis
  Téléphone: (+33) 2-37302466
  Télécopie: (+33) 2-37907982
- 44335 NANTES-CEDEX 3
  61, Rue de la Garde
  Téléphone: (+33) 2-40521905
  Télécopie: (+33) 2-40521961
- 08107 MARTORELLES
  Barcelona (ESPAÑA)
  C/can Fanosa n. 18
  Poligono Industrial Roca
  Téléfone: (+34) 93-5705895
  Telefax: (+34) 93-5705954

SAE-TYPE HIGH PRESSURE FITTINGS
SAE 标准高压管接头

The particular features of the SAE J 514 - 37° fitting for ducts consisting of weldless. rolled-steel pipes guarantee a very level of mechanical assembly safety.SAE J514-37°
扩口管接头广泛用于无缝钢管和冷拔管的安装，由于其特殊结构，保证了高水平的机械安装的安全性。
The fitting for pipes flared at 37° consists of three parts: fitting body nut and bush.
扩口式管接头主要有三部分组成：接头体，螺母和管衬
The flared end of the pipes is held between two coneshaped surfaces: body cone and bush. The seal is simply formed by means of a mechanical operation without any part being deformed.
扩口的管子被控制在接头体锥面和衬套之间，从而形成了不变形的金属密封形式
The bush is self-centreing with a degree of clearance between the nut and the pipe which ensures the correct alignment between the bush flare and the body cone and is therefore used as a ring to hold and support the pipe.
衬套本身的角度间隙确保了螺母和管子锥面的一致性，因此起到支撑作用。
The fitting’s bursting pressure is far higher than that of the pipe it is connected to.This feature gives a greater guarantee of safety.
接头体的爆破压力远高于被安装的管子的爆破压力，此功能提供了更大的安全保障。

APPROVALS
产品标准认证

A.S.M.E. standard: the SAE J 514 - 37° fitting conforms with the specification laid down by A.S.M.E. for high-pressure pipes.
美国工程机械工程师协会标准：SAEJ514-37° 扩口式管接头符合 A.S.M.E 中高压管子的应用标准要求。
S.A.E. J 514: the SAE J 514 - 37° fitting conforms with the provisions published in the S.A.E. standard for hydraulic fittings.
S.A.E.J514 :SAE J514-37° 扩口式接头符合 SAE J 514 标准要求

MATERIAL材质

SAE J 514 - 37° fittings are made of forged body or steel bars conforming with the following specification
SAE J 514 - 37° 扩口式管接头所采用的棒材料和锻造料对应标准如下：

SPECIFICATION 规格	ITALIAN 意大利	GERMAN 德国	FRENCH 法国	ENGLISH 英国	AMERICAN 美国
Bushed made from bars 实心衬套	UNI EN 10277 11S Mn Pb 37	DIN W-Nr. 1.0737	AFNOR S 300 Pb	- -	ASTM A 108 C 1137
Pressed nuts 冷挤压螺母	-	DIN W-Nr. 1.0214/1.0502	AFNOR CC 45	- -	ASTM A 576 C 1110
Nuts made from bars 实心螺母	UNI EN 10277 11S Mn Pb 37	DIN W-Nr. 1.0737	AFNOR S 300 Pb	BS 970 PTI 220 Mo 7 Pb	ASTM A 108 12 L14
Bodies made from bars 实心接头体	UNI EN 10277 11S Mn Pb 37	DIN W-Nr. 1.0737	AFNOR S 300 Pb	BS 970 PTI 220 Mo 7 Pb	ASTM A 108 12 L14
Forged Bodies 锻造接头体	UNI 4838 CF 9S Mn 28	DIN W-Nr. 1.0715	AFNOR S 200	BS 970 PTI 220 Mo 7	ASTM A 576 C 12 L14

PROTECTION: white passivation treatment Fe/Zn 8-UNI ISO 2081 with trivalent Chrome (free from hexavalent chrome) with sealer in compliance with the European Norm EC 200/53.
表面保护：白锌三价铬（不含六价铬）电镀，表面覆膜符合欧洲标准 EC200/53

S.A.E. 37° FITTING ASSEMBLY SAE 37°
S.A.E. 37° 扩口式管接头装配说明

1. Place the flared part of the pipe on the body/bush cone and adjust manually.
将扩口后的钢管压在扩口管接头 / 管衬上，用手拧紧螺母。
2. Tighten with the wrench so as to get a totally enclosed metal/metal joint (see table).
用扳手拧紧直到它们达到金属与金属的紧密结合（扭力表如下所示）

TORQUE WRENCH SETTINGS 扭力表			
Pipe diameter mm. 公制钢管	Pipe diameter inches 英制管钢	Min. torque Nm 最小扭力	Max. torque Nm 最大扭力
6	1/4"	10	15
8	5/16"	15	23
10	3/8"	22	34
12	1/2"	31	47
14	-	41	63
15	-	46	70
16	5/8"	51	78
18	-	63	98
20	3/4"	75	118
25	1"	117	176
30	-	157	245
32	1"1/4	176	274
38	1"1/2	216	343

3. A fundamental feature of the SAE 37 ° fitting is that it is easy and quick to assemble. It can in fact be assembled and removed on different occasions because of its enclosure which remains water and airtight at all times.SAE 37°
扩口式管接头的基本原理是方便快捷的安装，所以它适合任何场合的安装和拆卸。

CORRECT FLARING
正确扩口

Flaring which has been done properly guarantees a longer and more satisfactory life even when subject to critical conditions over extended periods. The maximum outside flaring diameter must be the same as the outside bush diameter. while the minimum diameter must be the same as the bush’s maximum inside diameter.
适当的扩口可以确保在苛刻的工作环境下使用寿命长久并更令用户满意。扩口管子最大外径必须与衬套的外径一样，最小外径也与衬套的最大内径一致。

EXAMPLES
所图所示

Out bush diameter – D
管衬外径 –D

Insi diameter – dde bush
管衬内径 –d

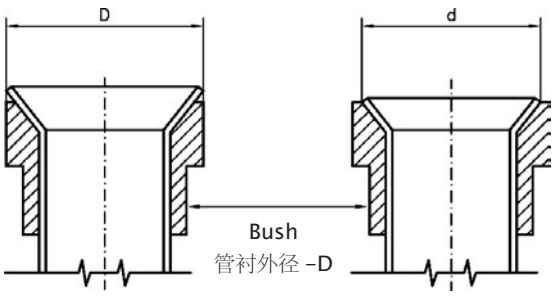

Out Diam. mm 钢管外径（mm）	(min) Diam. mm 最小	(max) Diam. mm 最大
6	8	9.7
8	9.5	11.3
10	11.2	12.7
12	14.9	17.3
14	17.9	20.2
15	17.9	20.2
16	17.9	20.2
18	22.3	24.7
20	22.3	24.7
25	28.7	31
30	35.8	38.9
32	35.8	38.9
38	41.4	45.3

If the pipe flaring is too short. nearly all the fitting's contact surface will go unutilised.
There is therefore the risk that the pipe surface will be squashed owing to the inadequate contact surface. In such cases maximum safety againts leaks or the flare breaking is not guaranteed.
如果管子扩口太短，几乎不能与接头体的锥面完全密封，易引起泄露，无安全保障
If the pipe flaring is too long. problems arise with the nut thread which will get jammed and thus prevent the fitting from being assembled properly. To function most efficiently. the flaring must be perpendicular and concentric with will the pipe and bush.
管子扩口太长又会出现螺母被堵塞，从而导致接头体不能正确的安装。
Imperfect perpendicularity and concentricity could be the result of the pipe being cut incorrectly or an irregular formation caused by a cutting tool or defective flaring.
为了达到最好工作状态，扩口必须保持和管子 / 管衬轴线同心。
When the pipe needs to be cut. a certain length must be taken into account which must then be added to the length of the line.
To establish how long this is. a length "L" representing the part of the fitting cone that enters the flared section of the pipe must be added to the required length of the pipe.
如管子需要切口，一个特定的长度必须考虑增加到管子的长度里去，请参考下图表所示操作；

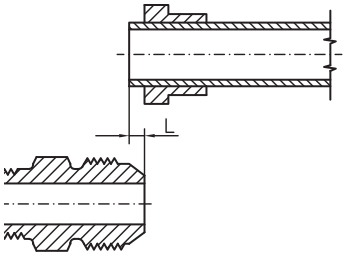

Outside pipe diam		Lenght L mm.	Outside pipe diam		Lenght L mm.
mm.	Inches		mm.	Inches	
6	1/4"	2	18		3
8	5/16"	2	20	3/4"	3
10	3/8"	2	25	1"	3
12	1/2"	2.5	30		4
14		2.5	32	1" 1/4	4
15		2.5	38	1" 1/2	4
16	5/8"	2.5			

MAXIMUM RATED PRESSURE VALUES FOR SAE JIC 514-37° COUPLINGS
SAE JIC 514-370扩口式管接头最大额定压力值

PN rated pressure corresponds to a safety factor of PN x 4 times.
公称压力是允许工作压力的 4 倍安全系数
The pressure values indicated in the relative coupling tables are understood as the maximum operating pressure values inclusive of peak value during standard operating conditions. with maximum permissible TB (DIN 2401) operating temperatures of:
在正常工作条件，相关表格里的压力值应理解为最大工作压力包括峰值下允许的（DIN 2401）的工作温度为
碳钢接头：-40℃ ÷ 120℃ (DIN 3859)
不锈钢 316LTi: -60℃ ÷ 20℃ AISI 316 L
With stainless steel. pressure values must be reduced in accordance with increases in the operating temperature.
由于不锈钢接头的工作温度特殊，相关的工作压力值也相应降低，如下列说明

+ 50℃ = -4%
+ 100℃ = -10%
+ 200℃ = -20%
+ 300℃ = -30%
+ 400℃ = -35%

Materials and operating temperatures for SAE JIC 514 coupling seals
NBR (Perbunam®) - BAYER) = -35℃ ÷ 100℃ for steel (DIN 3859)
FPM (Viton® - DU PONT) = -25℃ ÷ 200℃ for AISI 316L stainless steel
SAE JIC 514 密封件材料的工作温度范围 (DIN 3859)
NBR （丁腈橡胶） = -35℃ ÷ 100℃ 碳钢接头
FPM（氟橡胶） = -25℃ ÷ 200℃ 不锈钢接头

HERMETIC SEALS FOR TAPER THREADS
锥螺纹密封配件

Taper threads are not hermetically sealed. To obtain a watertight hermetic seal additional sealing elements are required such as PTFE sealing tape (eg. TEFLON)
锥螺纹不密封，为了获得水密气密封口则需要用到其他密封材料如聚四氟乙烯封带（如生料带）

TYPES OF THREAD FOR SAE J 514 COUPLINGS
SAE J514 管接头螺纹形式
BSPP THREAD (GAS-TYPE CYLINDRICAL) UNI ISO 228
UNI ISO 228 英制圆柱螺纹

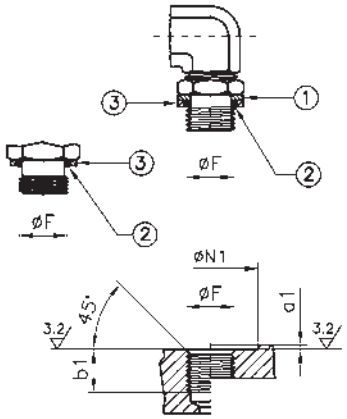

Ø F 螺纹尺寸	最大 a1	最小 b1	最小 Ø N1	O 型圈尺寸	扭力 (Nm) ± 10%
1/8" - 28	1.0	8	16.5	7.97 × 1.88	20
1/4" - 19	1.5	11	21.5	10.77 × 2.62	45
3/8" -19	1.5	11	25.5	13.94 × 2.62	70
1/2" -14	1.5	14	30.0	17.86 × 2.62	110
3/4" - 14	1.5	16	36.5	23.47 × 2.62	190
1" -11	2.0	19	46.0	29.74 × 3.53	310
1" 1/4-11	2.0	21	57.0	37.69 × 3.53	450
1" 1/2-11	2.0	21	63.5	44.04 × 3.53	540

① Fixed anti-extrusion ring
垫圈
② O-Ring
O 型圈
③ Mobile O-Ring seal ring
挡圈

UNF THREAD (ANSI/ASME B.1.1.1989)
美制UNF螺纹(ANSI/ASME B.1.1.1989)

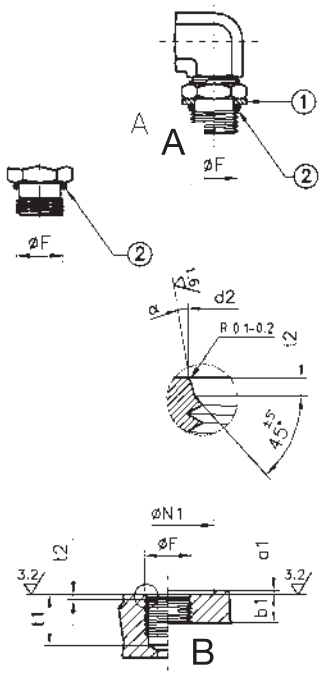

Ø F 螺纹尺寸	最大 a1	最小 b1	+0.1 d2	最大 Ø N1	最小 . t1	+0.3 t2	± 1° α	O 型圈尺寸	扭力 (Nm) ± 10%
7/16-20	1.0	12	12.4	21	14	2.4	12°	8.92 × 1.83	20
1/2 - 20	1.0	12	14.0	23	14	2.4	12°	10.52 × 1.83	35
9/16-18	1.0	13	15.6	26	16	2.5	12°	11.89 × 1.98	45
3/4-16	1.5	15	20.6	32	18	2.6	15°	16.36 × 2.21	70
7/8-14	1.5	17	23.9	35	20	2.6	15°	19.18 × 2.46	100
1" 1/16-12	1.5	20	29.2	42	24	3.3	15°	23.47 × 2.95	170
1" 5/16-12	2.0	20	35.5	50	24	3.3	15°	29.74 × 2.95	310
1" 5/8 - 12	2.5	20	43.5	60	24	3.4	15°	37.47 × 3.00	330
1" 7/8-12	2.5	20	49.8	65	24	3.4	15°	43.69 × 3.00	420

① Fixed anti-extrusion ring
垫圈
② O-Ring
O 型圈

A Male stud UNF-2A for O-Ring sealing (SAE J 514)
美制 UNF-2A 外螺纹
B Port UNF-2B for O-Ring sealing (SAE J 514)
美制 UNF-2B 内螺纹

METRIC CYLINDRICAL THREAD (ISO 6149)
公制圆柱螺纹(ISO 6149)轻系列

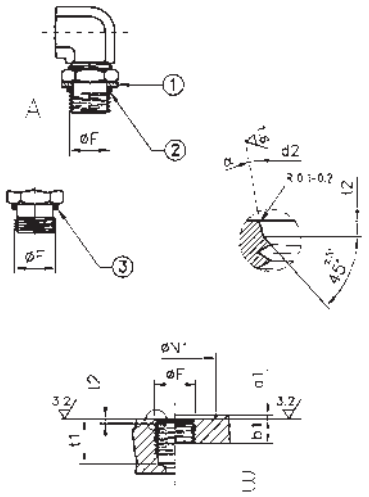

Ø F 螺纹尺寸	最大 a1	最小 b1	+0.1 d2	最小 Ø N1	最小 t1	+0.4 t2	± 1° α	O 型尺寸	扭力 (Nm) ± 10%
10 × 1	1.0	10.0	11.1	20	11.5	1.6	12°	8.1 × 1.6	20
12 × 1.5	1.5	11.5	13.8	23	14.0	2.4	15°	9.3 × 2.2	35
14 × 1.5	1.5	11.5	15.8	25	14.0	2.4	15°	11.3 × 2.2	45
16 × 1.5	1.5	13.0	17.8	28	15.5	2.4	15°	13.3 × 2.2	55
18 × 1.5	2.0	14.5	19.8	30	17.0	2.4	15°	15.3 × 2.2	70
22 × 1.5	2.0	15.5	23.8	34	18.0	2.4	15°	19.3 × 2.2	100
27 × 2	2.0	19.0	29.4	40	22.0	3.1	15°	23.6 × 2.9	170
33 × 2	2.5	19.0	35.4	49	22.0	3.1	15°	29.6 × 2.9	310
42 × 2	2.5	19.5	44.4	60	22.5	3.1	15°	38.6 × 2.9	330
48 × 2	2.5	22.0	50.4	66	25.0	3.1	15°	44.6 × 2.9	420

① Fi × ed anti-e × trusion ring 垫圈
② O-Ring O 型圈

METRIC CYLINDRICAL THREAD
公制圆柱螺纹

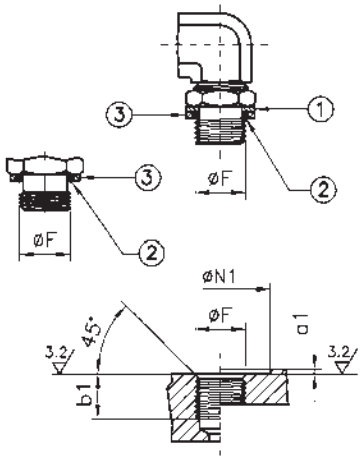

Ø F 螺纹尺寸	最大 a1	最小 b1	最小 Ø N1	O 型圈	扭力 (Nm) ± 10%
10 × 1	1.0	8	15	8.1 × 1.6	20
12 × 1.5	1.5	12	18	9.3 × 2.2	35
14 × 1.5	1.5	12	20	11.3 × 2.2	45
16 × 1.5	1.5	12	23	13.3 × 2.2	55
18 × 1.5	2.0	12	25	15.3 × 2.2	70
22 × 1.5	2.0	14	28	19.3 × 2.2	130
27 × 2	2.5	16	33	23.6 × 2.9	190
33 × 2	2.5	18	41	29.6 × 2.9	310
42 × 2	2.5	20	51	38.6 × 2.9	450
48 × 2	2.5	22	56	44.6 × 2.9	540

① Fi × ed anti-e × trusion ring 垫圈
② O-Ring O 型圈
③ Mobile O-Ring. seal ring 挡圈

BSPT THREAD (TAPERED GAS-TYPE) UNI ISO 7/1
英制锥螺纹 UNI ISO 7/1

Ø F BSPT	b
1/8" -28	4.0
1/4" -19	6.0
3/8" -19	6.4
1/2" 14	8.2
3/4" 14	9.5
1" - 11	10.4
1" 1/4-11	12.7
1" 1/2-11	12.7

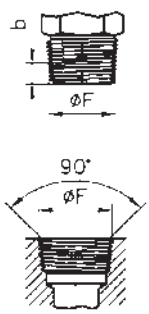

NPT THREAD (ANSI/ASME B.1.20.1.1983)
英制锥螺纹(ANSI/ASME B.1.20.1.1983)

Ø F NPT	b
1/8" -27	4.1
1/4" -18	5.8
3/8" -18	6.1
1/2" -14	8.1
3/4" -14	8.6
1" -11 1/2	10.2
1" 1/4-11 1/2	10.7
1" 1/2-11 1/2	10.7

THREAD COUPLING
管接头的油口端螺纹型式

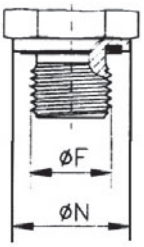

Male stud. form E
外螺纹 形式E
DIN 3852. Part 11
DIN 3852，第11部分
Packing-ensured tightness.

带弹性密封件形式

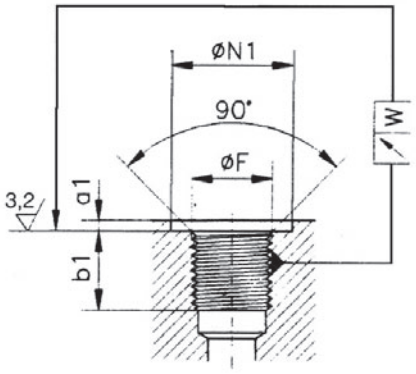

Port form X
油口形式x
to DIN 3852. Part 1-2
DIN 3852，第1-2部分
(for parallel stud thread)

连接外螺纹

英制圆柱螺纹

Ø F 螺纹尺寸	+0.4 Ø N1	Ø N	a1 最大	b1 最小	W	扭力 (Nm) ± 10%
G 1/8"-28	15	13.9	1	8	0.1	20
G 1/4"-19	20	18.9	1.5	12	0.1	50
G 3/8"-1	23	21.9	2	12	0.1	85
G 1/2"-14	28	26.9	2.5	14	0.1	115
G 3/4"-14	33	31.9	2.5	16	0.2	200
G 1" -11	41	39.9	2.5	18	0.2	380
G 1" 1/4-11	51	49.9	2.5	20	0.2	500
G 1" 1/2-11	56	54.9	2.5	22	0.2	600

* Tolerance class (A) is only valid for male threads
A 级公差仅适用于外螺纹

公制圆柱螺纹

Ø F	+0.4 Ø N1	Ø N	a1 最大	b1 最小	W	扭力 (Nm) ± 10%
M 10 × 1	15	13.9	1	8	0.1	20
M 12 × 1.5	18	16.9	1.5	12	0.1	40
M 14 × 1.5	20	18.9	1.5	12	0.1	55
M 16 × 1.5	23	21.9	1.5	12	0.1	70
M 18 × 1.5	25	23.9	2	12	0.1	90
M 22 × 1.5	28	26.9	2.5	14	0.1	145
M 27 × 2	33	32	2.5	16	0.2	200
M 33 × 2	41	39.9	2.5	18	0.2	380
M 42 × 2	51	49.9	2.5	20	0.2	500
M 48 × 2	56	54.9	2.5	22	0.2	600

ASSEMBLY INSTRUCTIONS

安装须知

A

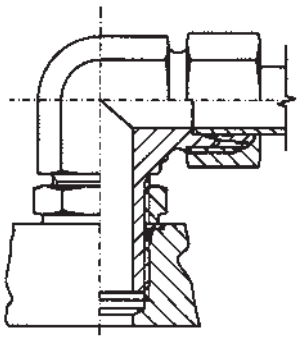

Version with UNF/UN-thread
Metric parallel-thread
ISO 6149
A 型
UNF/UN 美制螺纹
公制圆柱螺纹 ISO9149

Version with BSP parallel
Metric cylindrical thread
B 型
英制圆柱螺纹
公制圆柱螺纹

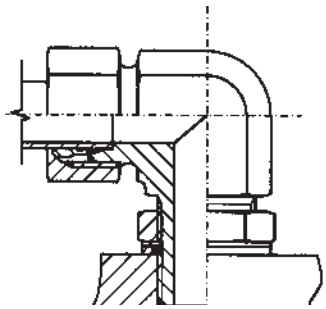

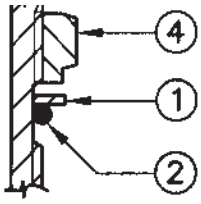

Screw back bulkhead nut ④ as for as it goes.
O-Ring ② and fixed anti-extrusion ring ① should be at the upper end of the notch.
Oil the O-Ring.
In the versions with BSPP. Metrich cylindrical (W) thread slip mobile ring ③ over O-Ring.
将锁紧螺母向后旋
将 O 型圈和垫圈放置在无螺纹端，尽可能的靠近螺母
润滑 O 型圈
英制圆柱螺纹和公制圆柱螺纹需要增加挡圈保护
O 型圈不弹出来

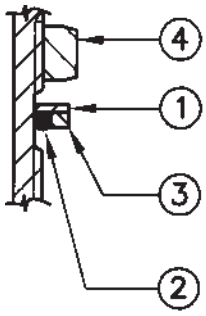

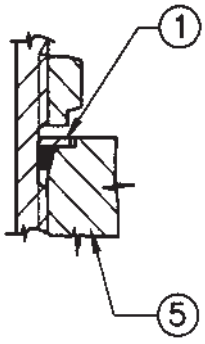

Manually screw the fitting into the screwing. hole ⑤
till mobile ring ③ or fixed anti-extrusion ring ① comes to rest.
To adjust in the wanted position turnback by maximum one turn.
用手螺母拧紧到接头体上，装上挡圈或者垫圈
如需调整方向，最大反拧一圈

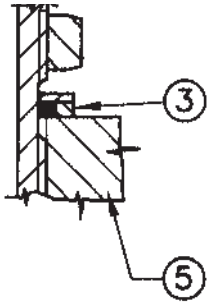

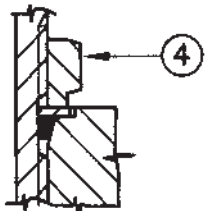

Tighten bulkhead nut ④ completely while
keeping the fitting body in the wanted position.
保持接头体在正确的位置，并拧紧锁螺母

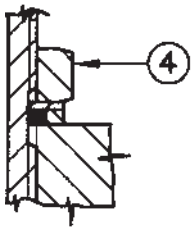

索引

索引

索引

索引

描述	订货型号		页码
BODY: ELBOW MALE COUPLING 45° UNF 2A 接头体：美制 JIC 外螺纹 74° 外锥 /UNF 外螺纹 45° 可调式角通		ST.36	229
BODY: ELBOW MALE COUPLING 45° METRIC - ISO 6149-3 接头体：美制 JIC 外螺纹 74° 外锥 / 公制轻型 ISO 6149-3 45° 可调式角通		ST.37	
BODY: ELBOW MALE COUPLING 45° METRIC - O-RING SEAL RING 接头体 ; 美制 JIC 外螺纹 74° 外锥 / 公制带 O 型圈密封可调式角通		ST.37W	230
BODY: ELBOW COUPLING 45° WITH ROTARY NUT JIC 接头式：美制 JIC 外螺纹 74° 外锥 / 美制 JIC 内螺纹 74° 内锥 45 ° 角通		ST.39	
BODY: ELBOW MALE COUPLING 45° NPT 接头体：美制 JIC 外螺纹 74° 外锥 /NPT 外螺纹 45° 角通		ST.41	231
BODY: ELBOW MALE COUPLING 45° BSPT (BSP TAPERED) 接头体：美制 JIC 外螺纹 74° 外锥 /BSPT 外螺纹 45° 角通		ST.42	232
BODY: EQUAL TEES 接头体：美制 JIC 外螺纹 74° 外锥 / 三通		ST.51	233
BODY: “T” OF LINE WITH ROTARY NUT JIC 接头体：美制 JIC 外螺纹 74° 外锥 / 美制 JIC 内螺纹 74° 外锥 / 美制 JIC 外螺纹 74° 外锥三通		ST.55	
BODY: DERIVATING “T” WITH ROTARY NUT JIC 接头体：美制 JIC 内螺纹 74° 内锥 / 美制 JIC 外螺纹 74° 外锥 / 美制 JIC 外螺纹 74° 外锥三通		ST.59	234
BODY: “T” MALE LINE UNF 2A 接头体：美制 JIC 外螺纹 74° 外锥 /UNF 外螺纹可调式三通		ST.60	
BODY: “T” MALE LINE BSPP 接头体：美制 JIC 外螺纹 74° 外锥 /BSPP 外螺纹可调式三通		ST.61	235
BODY: “T” MALE LINE METRIC - ISO 6149-3 接头体：美制 JIC 外螺纹 74° 外锥 / 公制外螺纹可调式轻型系列 ISO 6149-3 三通		ST.62	236
BODY: “T” MALE LINE METRIC - O-RING SEAL RING 接头体：美制 JIC 外螺纹 74° 外锥 / 公制外螺纹带 O 型圈可调式三通		ST.62W	
BODY: DERIVATING “T” BSPP 接头体：美制 JIC 外螺纹 74° 外锥 /BSPP 外螺纹可调式三通		ST.63	237
BODY: DERIVATING “T” METRIC - ISO 6149-3 接头体：美制 JIC 外螺纹 74° 外锥 / 公制外螺纹可调式轻型系列 ISO 6149-3 三通		ST.64	238
BODY: DERIVATING “T” METRIC - O-RING SEAL RING 接头体：美制 JIC 外螺纹 74° 外锥 / 公制外螺纹带 O 型圈可调式三通		ST.64W	

索引

索引

索引

描述	订货型号		页码
ELBOW MALE COUPLING 45° BSPP - BSPT 英管外螺纹 60° 内锥面密封 / 英锥管外螺纹 45° 角通	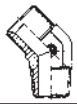	60.03	253
45° MALE-MALE O.RING ADJUSTABLE ADAPTOR 英管外螺纹 60° 内锥面密封 / 英管外螺纹带 O 型圈可调向 45° 角通	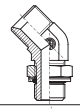	60.04	254
90° MALE-MALE O.RING ADJUSTABLE ADAPTOR 英管外螺纹 60° 内锥面密封 / 英管外螺纹带 O 型圈可调向直角通	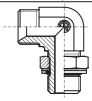	60.05	
ELBOW COUPLING 90° WITH ROTARY NUT 英管外螺纹 60° 内锥面密封 / 英制内螺纹 60° 外锥面密封直角通		60.09	255
ELBOW COUPLING 90° WITH ROTARY NUT 直角内螺纹 60° 外锥密封	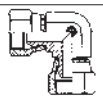	60.10	
ELBOW FEMALE COUPLING 90° 布锥管内螺纹直角通		60.14	256
ELBOW FEMALE COUPLING 90° BSPP 英管内螺纹直角通		60.15	
ELBOW FEMALE COUPLING 45° NPT 布锥管内螺纹 45° 角通	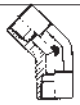	60.16	
REDUCED ELBOW MALE COUPLING 90° BSPT 变径英锥管外螺纹直角通		60.19	257
MALE COUPLING 90° BSPT 英锥管外螺纹直角通		60.20	
REDUCED ELBOW MALE COUPLING 90° NPT 变径布锥管外螺纹直角通		60.21	
MALE COUPLING 90° NPT 布锥管外螺纹直角通	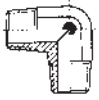	60.22	258
REDUCED ELBOW MALE FEMALE 90° NPT 变径布锥管内螺纹 / 布锥外螺纹直角通	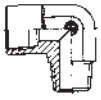	60.25	
ELBOW MALE FEMALE 90° NPT 布锥管内螺纹 / 布锥管外螺纹直角通	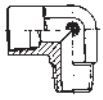	60.26	
ELBOW MALE FEMALE 45° NPT 布锥管内螺纹 / 布锥管外螺纹 45° 角通	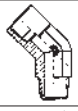	60.27	259
REDUCED ELBOW MALE BSPT FEMALE BSPP 90° 变径 英管内螺纹 / 英锥外螺纹直角通	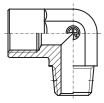	60.35	

索引

描述	订货型号		页码
ELBOW MALE BSPT FEMALE BSPP 90° 英管内螺纹 / 英锥管外螺纹直角通		60.36	259
ELBOW MALE BSPT FEMALE BSPP 45° 英管内螺纹 / 英锥管外螺纹 45° 角通		60.37	260
ELBOW FEMALE COUPLING 45° BSPP 英管内螺纹 45° 角通		60.38	
ELBOW COUPLING 45° WITH ROTARY NUT 英管内螺纹 60° 外锥 45° 角通		60.39	
EQUAL TEES 等径三通		60.51	261
"T" MALE-MALE O.RING ADJUSTABLE ADAPTOR T 型带 O 型圈可调式三通		60.53	
"T" OF LINE WITH ROTARY NUT T 型可转旋三通		60.55	262
ADJUSTABLE ADAPTOR "L" MALE-MALE O.RING L 型带 O 形圈可调式三通		60.57	
DERIVATING "T" WITH ROTARY NUT T 型可转旋三通		60.59	263
EQUAL TEES WITH ROTARY NUT 等径内螺纹扣压式三通		60.60	
FEMALE "T" NPT T 型布锥内螺纹三通		60.64	
FEMALE "T" BSPP T 型英制直螺纹三通		60.65	264
DERIVATING "T" MALE/FEMALE NPT T 型布锥外螺纹三通		60.67	
DERIVATING "L" MALE/FEMALE NPT L 型布锥外螺纹三通		60.68	
DERIVATING "T" MALE BSPT FEMALE BSPP T 型英锥管外螺纹三通		60.77	265
DERIVATING "L" MALE BSPT FEMALE BSPP L 型英锥管外螺纹三通		60.78	

索引

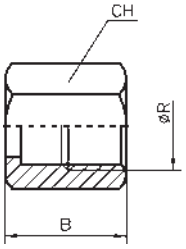

NUT
JIC 螺帽

Ø 钢管外径		订货型号	Ø 螺纹	B	CH	
公制	英制					
6	1/4	BA.13.00.04	7/16	15.5	14	
8	5/16	BA.13.00.05	1/2	17	17	
10	3/8	BA.13.00.06	9/16	18.3	19	
12	1/2	BA.13.00.08	3/4	21.3	22	
14	-	BA.13.00.10	7/8	24.6	27	
15	-	BA.13.00.10	7/8	24.6	27	
16	5/8	BA.13.00.10	7/8	24.6	27	
18	-	BA.13.00.12	1” 1/16	25.9	32	
20	3/4	BA.13.00.14	1” 1/16	25.9	32	
25	1”	BA.13.00.16	1” 5/16	28.4	41	
30	-	BA.13.00.20	1” 5/8	31	50	
32	1” 1/4	BA.13.00.20	1” 5/8	31	50	
38	1” 1/2	BA.13.00.24	1” 7/8	35.8	60	

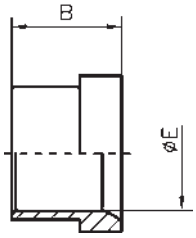

BUSH: INCHES TUBE METRIC TUBE
管衬：英制管 / 公制管

Ø 钢管外径		订货型号	B	Ø E	
公制	英制				
-	1/4	BA.15.00.04	10.4	6.55	
-	5/16	BA.15.00.05	11.2	8.15	
-	3/8	BA.15.00.06	12.7	9.75	
-	1/2	BA.15.00.08	14.2	12.90	
-	5/8	BA.15.00.10	16.8	16.10	
-	3/4	BA.15.00.12	17.3	19.25	
-	1”	BA.15.00.16	19.8	25.60	
-	1” 1/4	BA.15.00.20	23.1	32.10	
-	1” 1/2	BA.15.00.24	28.4	38.45	
6	-	BA.83.00.06	10.4	6.13	
8	-	BA.83.00.08	11.2	8.13	
10	-	BA.83.00.10	12.7	10.13	
12	-	BA.83.00.12	14.2	12.13	
14	-	BA.83.00.14	16.8	14.15	
15	-	BA.83.00.15	16.8	15.15	
16	-	BA.83.00.16	16.8	16.15	
18	-	BA.83.00.18	17.3	18.15	
20	-	BA.83.00.20	17.3	20.15	
25	-	BA.83.00.25	19.8	25.15	
30	-	BA.83.00.30	23.1	30.15	
32	-	BA.83.00.32	23.1	32.25	
38	-	BA.83.00.38	28.4	38.35	

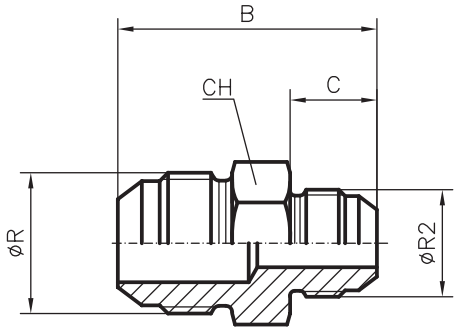

BODY: STRAIGHT COUPLING
接头体：美制 JIC 等径直通

Ø 钢管外径		订货型号	Ø 螺纹	B	C	CH	PN	
公制	英制							
6	1/4	BA.17.00.04	7/16	34.8	14	13 1)	350	
8	5/16	BA.17.00.05	1/2	34.8	14	14	350	
10	3/8	BA.17.00.06	9/16	35.8	14.1	16 2)	350	
12	1/2	BA.17.00.08	3/4	41.1	16.7	19	350	
14	-	BA.17.00.10	7/8	47.8	19.3	24	350	
15	-	BA.17.00.10	7/8	47.8	19.3	24	350	
16	5/8	BA.17.00.10	7/8	47.8	19.3	24	350	
18	-	BA.17.00.12	1" 1/16	54.9	21.9	27	350	
20	3/4	BA.17.00.12	1" 1/16	54.9	21.9	27	350	
25	1"	BA.17.00.16	1" 5/16	57.2	23.1	36	280	
30	-	BA.17.00.20	1" 5/8	61.7	24.3	46	210	
32	1" 1/4	BA.17.00.20	1" 5/8	61.7	24.3	46	210	
38	1" 1/2	BA 17.00.24	1" 7/8	69.8	27.5	50	140	

1) AISI 316L CH = 12
2) AISI 316L CH = 17

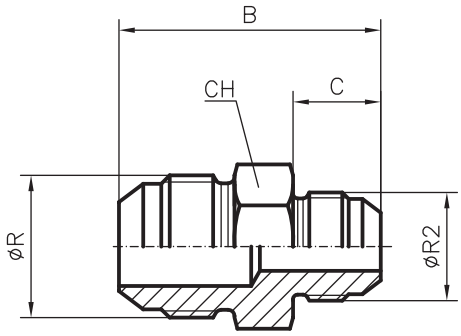

BODY: REDUCED STRAIGHT COUPLING
接头体：美制 JIC 变径直通

Ø 钢管外径		订货型号	Ø 螺纹	Ø 螺纹	B	C	C2	CH	PN
公制	英制								
10	3/8	BA.18.06.04	9/16	7/16	35.7	14.1	14	16 1)	350
12	1/2	BA.18.08.06	3/4	9/16	38.5	16.7	14.1	19	350
14	-	BA.18.10.08	7/8	3/4	45.2	19.3	16.7	24	350
15	-	BA.18.10.08	7/8	3/4	45.2	19.3	16.7	24	350
16	5/8	BA.18.10.08	7/8	3/4	45.2	19.3	16.7	24	350
18	-	BA.18.12.08	1" 1/16	3/4	49.7	21.9	16.7	27	350
20	3/4	BA.18.12.08	1" 1/16	3/4	49.7	21.9	16.7	27	350
18	-	BA.18.12.10	1" 1/16	7/8	52.3	21.9	19.3	27	350
20	3/4	BA.18.12.10	1" 1/16	7/8	52.3	21.9	19.3	27	350
25	1"	BA.18.16.12	1" 5/16	1" 1/16	56	23.1	21.9	36	280

1) AISI 316L CH = 17

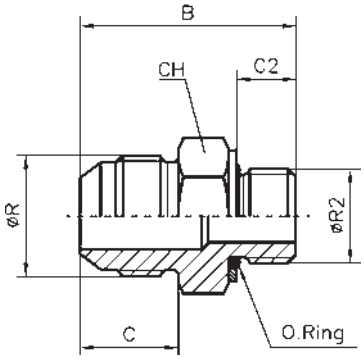

BODY: MALE STUD BSPP (B.S.P. PARALLEL)

接头体：美制 JIC 外螺纹 74° 外锥 / 英管外螺纹平面密封（英制圆柱螺纹）

Ø 钢管外径		订货型号	Ø 螺纹	Ø R2 BSPP	B	C	C2	CH	PN
公制	英制								
6	1/4	BA.19.04.02	7/16	1/8	28.7	14	6.3	16 1)	350
6	1/4	BA.19.04.04	7/16	1/4	32	14	9.5	19	350
6	1/4	BA.19.04.06	7/16	3/8	33	14	9.5	22	350
6	1/4	BA.19.04.08	7/16	1/2	38.6	14	13	30	350
8	5/16	BA.19.05.02	1/2	1/8	28.7	14	6.3	16 1)	350
8	5/16	BA.19.05.04	1/2	1/4	32	14	9.5	19	350
8	5/16	BA.19.05.06	1/2	3/8	33.7	14	9.5	22	350
10	3/8	BA.19.06.02	9/16	1/8	28.7	14.1	6.3	16 1)	350
10	3/8	BA.19.06.04	9/16	1/4	32	14.1	9.5	19	350
10	3/8	BA.19.06.06	9/16	3/8	33	14.1	9.5	22	350
10	3/8	BA.19.06.08	9/16	1/2	38.6	14.1	13	30	350
12	1/2	BA.19.08.04	3/4	1/4	35	16.7	9.5	19	350
12	1/2	BA.19.08.06	3/4	3/8	36	16.7	9.5	22	350
12	1/2	BA.19.08.08	3/4	1/2	41.4	16.7	13	30	350
12	1/2	BA.19.08.12	3/4	3/4	42.4	16.7	13	36	250
14	-	BA.19.10.06	7/8	3/8	39.1	19.3	9.5	24	350
15	-	BA.19.10.06	7/8	3/8	39.1	19.3	9.5	24	350
16	5/8	BA.19.10.06	7/8	3/8	39.1	19.3	9.5	24	350
14	-	BA.19.10.08	7/8	1/2	43.9	19.3	13	30	350
15	-	BA.19.10.08	7/8	1/2	43.9	19.3	13	30	350
16	5/8	BA.19.10.08	7/8	1/2	43.9	19.3	13	30	350
14	-	BA.19.10.12	7/8	3/4	43.9	19.3	13	36	250
15	-	BA.19.10.12	7/8	3/4	43.9	19.3	13	36	250
16	5/8	BA.19.10.12	7/8	3/4	43.9	19.3	13	36	250
18	-	BA.19.12.06	1" 1/16	3/8	42.4	21.9	9.5	30	350
20	3/4	BA.19.12.06	1" 1/16	3/8	42.4	21.9	9.5	30	350
18	-	BA.19.12.08	1" 1/16	1/2	46.7	21.9	13	30	350
20	3/4	BA.19.12.08	1" 1/16	1/2	46.7	21.9	13	30	350
18	-	BA.19.12.12	1" 1/16	3/4	47.5	21.9	13	36	250
20	3/4	BA.19.12.12	1" 1/16	3/4	47.5	21.9	13	36	250
18	-	BA.19.12.16	1" 1/16	1"	52.6	21.9	16	46	250
20	3/4	BA.19.12.16	1" 1/16	1"	52.6	21.9	16	46	250
25	1"	BA.19.16.12	1" 5/16	3/4	48.5	23.1	13	36	250
25	1"	BA.19.16.16	1" 5/16	1"	53.6	23.1	16	46	250
25	1"	BA.19.16.20	1" 5/16	1" 1/4	55.1	23.1	16	50	175
25	1"	BA.19.16.24	1" 5/16	1" 1/2	55.7	23.1	16	60	175
30	-	BA.19.20.16	1" 5/8	1"	53.6	24.3	16	46	210
32	1" 1/4	BA.19.20.16	1" 5/8	1"	53.6	24.3	16	46	210
30	-	BA.19.20.20	1" 5/8	1" 1/4	56.9	24.3	16	50	175
32	1" 1/4	BA.19.20.20	1" 5/8	1" 1/4	56.9	24.3	16	50	175
30	-	BA.19.20.24	1" 5/8	1" 1/2	56.8	24.3	16	55	140
32	1" 1/4	BA.19.20.24	1" 5/8	1" 1/2	56.8	24.3	16	55	140
38	1" 1/2	BA.19.24.16	1" 7/8	1"	57.5	27.5	16	50	140
38	1" 1/2	BA.19.24.20	1" 7/8	1" 1/4	60.4	27.5	16	50	140
38	1" 1/2	BA.19.24 24	1" 7/8	1" 1/2	61	27.5	16	60	140

1) AISI 316L CH = 17

RASTELLI RACCORDI - s.r.l.
I - 27019 VILLANTERIO (PV)

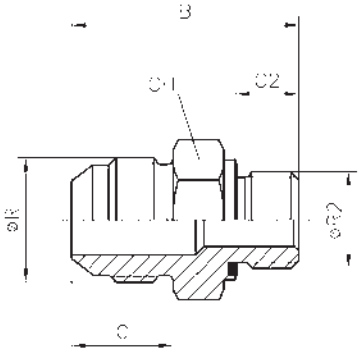

BODY: MALE STUD BSPP (B.S.P. PARALLEL)
GG - RUBBER SEAL - TYPE E DIN 3852
接头体：美制 JIC 外螺纹 74° 外锥 /
英管外螺纹胶垫密封（英制圆柱螺纹）

Ø 钢管外径		订货型号	Ø 螺纹	Ø R2 BSPP	B	C	C2	CH	PN
公制	英制								
6	1/4	BA.20.04.02	7/16	1/8	30	14	8	14	350
6	1/4	BA.20.04.04	7/16	1/4	35	14	12	19	350
6	1/4	BA.20.04.06	7/16	3/8	35.5	14	12	22	350
6	1/4	BA.20.04.08	7/16	1/2	39	14	14	27	350
8	5/16	BA.20.05.02	1/2	1/8	30	14	8	14	350
8	5/16	BA.20.05.04	1/2	1/4	35	14	12	19	350
8	5/16	BA.20.05.06	1/2	3/8	35.7	14	12	22	350
10	3/8	BA.20.06.02	9/16	1/8	31	14.1	8	16 1)	350
10	3/8	BA.20.06.04	9/16	1/4	35	14.1	12	19	350
10	3/8	BA.20.06.06	9/16	3/8	36	14.1	12	22	350
10	3/8	BA.20.06.08	9/16	1/2	39.5	14.1	14	27	350
12	1/2	BA. 20.08.04	3/4	1/4	38.5	16.7	12	19	350
12	1/2	BA.20.08.06	3/4	3/8	39	16.7	12	22	350
12	1/2	BA.20.08.08	3/4	1/2	42	16.7	14	27	350
12	1/2	BA.20.08.12	3/4	3/4	45.5	16.7	16	32	250
14	-	BA.20.10.06	7/8	3/8	42.5	19.3	12	24	350
15	-	BA.20.10.06	7/8	3/8	42.5	19.3	12	24	350
16	5/8	BA.20.10.06	7/8	3/8	42.5	19.3	12	24	350
14	-	BA.20.10.08	7/8	1/2	44.5	19.3	14	27	350
15	-	BA.20.10.08	7/8	1/2	44.5	19.3	14	27	350
16	5/8	BA.20.10.08	7/8	1/2	44.5	19.3	14	27	350
14	-	BA.20.10.12	7/8	3/4	48	19.3	16	32	250
15	-	BA.20.10.12	7/8	3/4	48	19.3	16	32	250
16	5/8	BA.20.10.12	7/8	3/4	48	19.3	16	32	250
18	-	BA.20.12.06	1" 1/16	3/8	45.5	21.9	12	27	350
20	3/4	BA.20.12.06	1" 1/16	3/8	45.5	21.9	12	27	350
18	-	BA.20.12.08	1" 1/16	1/2	49	21.9	14	27	350
20	3/4	BA.20.12.08	1" 1/16	1/2	49	21.9	14	27	350
18	-	BA.20.12.12	1" 1/16	3/4	51	21.9	16	32	250
20	3/4	BA.20.12.12	1" 1/16	3/4	51	21.9	16	32	250
18	-	BA.20.12.16	1" 1/16	1"	53.5	21.9	18	41	250
20	3/4	BA.20.12.16	1" 1/16	1"	53.5	21.9	18	41	250
25	1"	BA.20.16.12	1" 5/16	3/4	52.5	23.1	16	36	250
25	1"	BA.20.16.16	1" 5/16	1"	54.5	23.1	18	41	250
25	1"	BA.20.16.20	1" 5/16	1" 1/4	58.5	23.1	20	50	175
25	1"	BA.20.16.24	1" 5/16	1" 1/2	62	23.1	22	55	175
30	-	BA.20.20.16	1" 5/8	1"	56	24.3	18	46	210
32	1" 1/4	BA.20.20.16	1" 5/8	1"	56	24.3	18	46	210
30	-	BA.20.20.20	1" 5/8	1" 1/4	60	24.3	20	50	175
32	1" 1/4	BA.20.20.20	1" 5/8	1" 1/4	60	24.3	20	50	175
30	-	BA.20.20.24	1" 5/8	1" 1/2	63.8	24.3	22	55	140
32	1" 1/4	BA.20.20.24	1" 5/8	1" 1/2	63.8	24.3	22	55	140
38	1" 1/2	BA.20.24.16	1" 7/8	1"	60	27.5	18	50	140
38	1" 1/2	BA.20.24.20	1" 7/8	1" 1/4	65	27.5	20	50	140
38	1" 1/2	BA.20.24.24	1" 7/8	1" 1/2	67	27.5	22	55	140

1) AISI 316L CH = 17

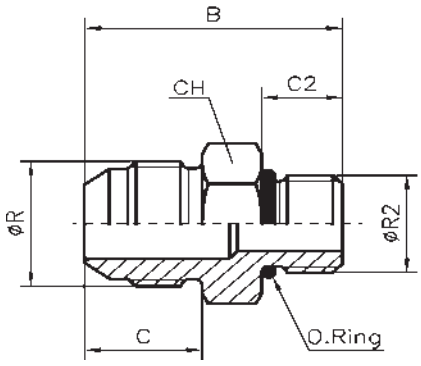

BODY: MALE STUD UNF 2A
接头体：英制 JIC 外螺纹 74°
外锥 /UNF 外螺纹

Ø 钢管外径		订货型号	Ø 螺纹	Ø R2 UNF	B	C	C2	CH	PN
公制	英制								
6	1/4	BA.21.04.04	7/16	7/16	31.2	14	9.1	14	350
6	1/4	BA.21.04.05	7/16	1/2	31.2	14	9.1	16 1)	350
6	1/4	BA.21.04.06	7/16	9/16	33	14	9.9	17	350
6	1/4	BA.21.04.08	7/16	3/4	35	14	11.1	22	350
8	5/16	BA.21.05.05	1/2	1/2	31.2	14	9.1	16 1)	350
8	5/16	BA.21.05.06	1/2	9/16	33	14	9.9	17	350
10	3/8	BA.21.06.04	9/16	7/16	32.2	14.1	9.1	16 1)	350
10	3/8	BA.21.06.05	9/16	1/2	32.2	14.1	9.1	16 1)	350
10	3/8	BA.21.06.06	9/16	9/16	33	14.1	9.9	17	350
10	3/8	BA.21.06.08	9/16	3/4	35.1	14.1	11.1	22	350
10	3/8	BA.21.06.10	9/16	7/8	35	14.1	12.7	27	350
12	1/2	BA.21.08.06	3/4	9/16	36.6	16.7	9.9	19	350
12	1/2	BA.21.08.08	3/4	3/4	37.6	16.7	11.1	22	350
12	1/2	BA.21.08.10	3/4	7/8	40.6	16.7	12.7	27	350
12	1/2	BA.21.08.12	3/4	1" 1/16	44.7	16.7	15.1	32	350
14	-	BA.21.10.08	7/8	3/4	40.6	19.3	11.1	24	350
15	-	BA.21.10.08	7/8	3/4	40.6	19.3	11.1	24	350
16	5/8	BA.21.10.08	7/8	3/4	40.6	19.3	11.1	24	350
14	-	BA.21.10.10	7/8	7/8	43.2	19.3	12.7	27	350
15	-	BA.21.10.10	7/8	7/8	43.2	19.3	12.7	27	350
16	5/8	BA.21.10.10	7/8	7/8	43.2	19.3	12.7	27	350
14	-	BA.21.10.12	7/8	1" 1/16	47.2	19.3	15.1	32	350
15	-	BA.21.10.12	7/8	1" 1/16	47.2	19.3	15.1	32	350
16	5/8	BA.21.10.12	7/8	1" 1/16	47.2	19.3	15.1	32	350
18	-	BA.21.12.08	1" 1/16	3/4	45.2	21.9	11.1	27	350
20	3/4	BA.21.12.08	1" 1/16	3/4	45.2	21.9	11.1	27	350
18	-	BA.21.12.10	1" 1/16	7/8	46.4	21.9	12.7	27	350
20	3/4	BA.21.12.10	1" 1/16	7/8	46.4	21.9	12.7	27	350
18	-	BA.21.12.12	1" 1/16	1" 1/16	50	21.9	15.1	32	350
20	3/4	BA.21.12.12	1" 1/16	1" 1/16	50	21.9	15.1	32	350
18	-	BA.21.12.16	1" 1/16	1" 5/16	50.8	21.9	15.1	38 2)	350
20	3/4	BA.21.12.16	1" 1/16	1" 5/16	50.8	21.9	15.1	38 2)	350
25	1"	BA.21.16.10	1" 5/16	7/8	52.8	23.1	12.7	38 2)	280
25	1"	BA.21.16.12	1" 5/16	1" 1/16	51.1	23.1	15.1	36	280
25	1"	BA.21.16.16	1" 5/16	1" 5/16	51.8	23.1	15.1	38 2)	280
25	1"	BA.21.16.20	1" 5/16	1" 5/8	53.8	23.1	15.1	50	280
30	-	BA.21.20.16	1" 5/8	1" 5/16	55.1	24.3	15.1	50	210
32	1" 1/4	BA.21.20.16	1" 5/8	1" 5/16	55.1	24.3	15.1	50	210
30	-	BA.21.20.20	1" 5/8	1" 5/8	55.1	24.3	15.1	50	210
32	1" 1/4	BA.21.20.20	1" 5/8	1" 5/8	55.1	24.3	15.1	50	210
30	-	BA.21.20.24	1" 5/8	1" 7/8	56	24.3	15.1	55	140
32	1" 1/4	BA.21.20.24	1" 5/8	1" 7/8	56	24.3	15.1	55	140
38	1" 1/2	BA.21.24.20	1" 7/8	1" 5/8	55.5	27.5	15.1	55	140
38	1" 1/2	BA.21.24.24	1" 7/8	1" 7/8	60.2	27.5	15.1	55	140

1) AISI 316L CH = 17
2) AISI 316L CH = 41

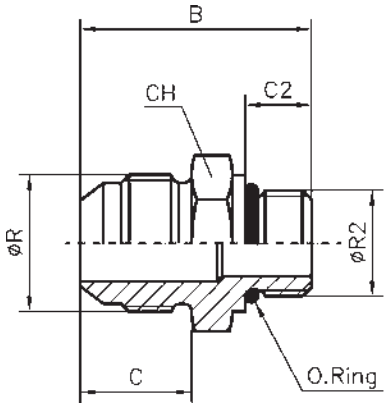

BODY: MALE STUD METRIC PARALLEL - ISO 6149-3

接头体：美制 JIC 外螺纹 74° 外锥 / 公制直螺纹轻系列 ISO 6149.3 平面密封

Ø 钢管外径		订货型号	Ø 螺纹	Ø R2 公制螺纹	B	C	C2	CH	PN
公制	英制								
6	1/4	BA.23.04.02	7/16	10 × 1	31	14	8.5	16 1)	350
6	1/4	BA.23.04.03	7/16	12 × 1.5	33	14	11	16	350
8	5/16	BA.23.05.02	1/2	10 × 1	30.5	14	8.5	16	350
8	5/16	BA.23.05.03	1/2	12 × 1.5	33.5	14	11	19	350
8	5/16	BA.23.05.04	1/2	14 × 1.5	33.5	14	11	19	350
10	3/8	BA.23.06.04	9/16	14 × 1.5	33.5	14.1	11	19	350
10	3/8	BA.23.06.05	9/16	16 × 1.5	35	14.1	11.5	22	350
12	1/2	BA.23.08.04	3/4	14 × 1.5	36	16.7	11	19	350
12	1/2	BA.23.08.05	3/4	16 × 1.5	37.5	16.7	11.5	22	350
12	1/2	BA.23.08.06	3/4	18 × 1.5	39	16.7	12.5	24	350
12	1/2	BA.23.08.08	3/4	22 × 1.5	39	16.7	13	27	350
14	-	BA.23.10.04	7/8	14 × 1.5	40	19.3	11	24	350
15	-	BA.23.10.04	7/8	14 × 1.5	40	19.3	11	24	350
16	5/8	BA.23.10.04	7/8	14 × 1.5	40	19.3	11	24	350
14	-	BA.23.10.06	7/8	18 × 1.5	42	19.3	12.5	24	350
15	-	BA.23.10.06	7/8	18 × 1.5	42	19.3	12.5	24	350
16	5/8	BA.23.10.06	7/8	18 × 1.5	42	19.3	12.5	24	350
14	-	BA.23.10.07	7/8	20 × 1.5	43	19.3	12.5	27	350
15	-	BA.23.10.07	7/8	20 × 1.5	43	19.3	12.5	27	350
16	5/8	BA.23.10.07	7/8	20 × 1.5	43	19.3	12.5	27	350
14	-	BA.23.10.08	7/8	22 × 1.5	43	19.3	13	27	350
15	-	BA.23.10.08	7/8	22 × 1.5	43	19.3	13	27	350
16	5/8	BA.23.10.08	7/8	22 × 1.5	43	19.3	13	27	350
18	-	BA.23.12.06	1" 1/16	18 × 1.5	44	21.9	12.5	27	350
20	3/4	BA.23.12.06	1" 1/16	18 × 1.5	44	21.9	12.5	27	350
18	-	BA.23.12.08	1" 1/16	22 × 1.5	45.5	21.9	13	27	350
20	3/4	BA.23.12.08	1" 1/16	22 × 1.5	45.5	21.9	13	27	350
18	-	BA.23.12.14	1" 1/16	27 × 2	49	21.9	16	32	350
20	3/4	BA.23.12.14	1" 1/16	27 × 2	49	21.9	16	32	350
25	1"	BA.23.16.14	1" 5/16	27 × 2	50.5	23.1	16	36	280
25	1"	BA.23.16.16	1" 5/16	33 × 2	51.5	23.1	16	41	280
30	-	BA.23.20.20	1" 5/8	42 × 2	55	24.3	16	50	210
32	1" 1/4	BA.23.20.20	1" 5/8	42 × 2	55	24.3	16	50	210
38	1" 1/2	BA.23.24.24	1" 7/8	48 × 2	59.5	27.5	17.5	55	140

1) AISI 316L CH = 17

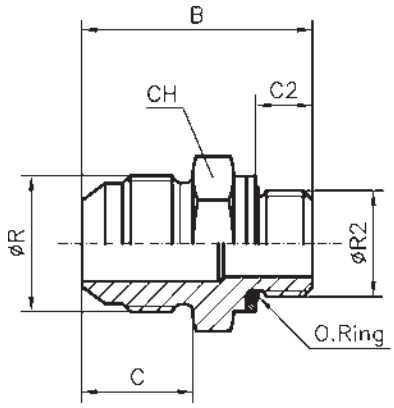

BODY: MALE STUD METRIC PARALLEL-O-RING SEALRING

接头体：美制 JIC 外螺纹 74° 外锥 / 公制 O 型圈密封

Ø 钢管外径		订货型号	Ø 螺纹	Ø R2 公制螺纹	B	C	C2	CH	PN
公制	英制								
6	1/4	BA.23.04.02 W	7/16	10 × 1	31	14	7.5	16 1)	350
6	1/4	BA.23.04.03 W	7/16	12 × 1.5	33	14	9.5	16 1)	350
8	5/16	BA.23.05.02 W	1/2	10 × 1	31.5	14	7.5	16 1)	350
8	5/16	BA.23.05.03 W	1/2	12 × 1.5	33.5	14	9.5	19	350
8	5/16	BA.23.05.04 W	1/2	14 × 1.5	33.5	14	9.5	19	350
10	3/8	BA.23.06.04 W	9/16	14 × 1.5	33.5	14.1	9.5	19	350
10	3/8	BA.23.06.05 W	9/16	16 × 1.5	35	14.1	10	22	350
12	1/2	BA.23.08.04 W	3/4	14 × 1.5	36	16.7	9.5	19	350
12	1/2	BA.23.08.05 W	3/4	16 × 1.5	37.5	16.7	10	22	350
12	1/2	BA.23.08.06 W	3/4	18 × 1.5	39	16.7	11	24	350
12	1/2	BA.23.08.08 W	3/4	22 × 1.5	39	16.7	11.5	27	350
14	-	BA.23.10.04 W	7/8	14 × 1.5	40	19.3	9.5	24	350
15	-	BA.23.10.04 W	7/8	14 × 1.5	40	19.3	9.5	24	350
16	5/8	BA.23.10.04 W	7/8	14 × 1.5	40	19.3	9.5	24	350
14	-	BA.23.10.06 W	7/8	18 × 1.5	42	19.3	11	24	350
15	-	BA.23.10.06 W	7/8	18 × 1.5	42	19.3	11	24	350
16	5/8	BA.23.10.06 W	7/8	18 × 1.5	42	19.3	11	24	350
14	-	BA.23.10.07 W	7/8	20 × 1.5	43	19.3	11.5	27	350
15	-	BA.23.10.07 W	7/8	20 × 1.5	43	19.3	11.5	27	350
16	5/8	BA.23.10.07 W	7/8	20 × 1.5	43	19.3	11.5	27	350
14	-	BA.23.10.08 W	7/8	22 × 1.5	43	19.3	11.5	27	350
15	-	BA.23.10.08 W	7/8	22 × 1.5	43	19.3	11.5	27	350
16	5/8	BA.23.10.08 W	7/8	22 × 1.5	43	19.3	11.5	27	350
18	-	BA.23.12.06 W	1" 1/16	18 × 1.5	44	21.9	11	27	350
20	3/4	BA.23.12.06 W	1" 1/16	18 × 1.5	44	21.9	11	27	350
18	-	BA.23.12.08 W	1" 1/16	22 × 1.5	45.5	21.9	11.5	27	350
20	3/4	BA.23.12.08 W	1" 1/16	22 × 1.5	45.5	21.9	11.5	27	350
18	-	BA.23.12.14 W	1" 1/16	27 × 2	49	21.9	14	32	350
20	3/4	BA.23.12.14 W	1" 1/16	27 × 2	49	21.9	14	32	350
25	1"	BA.23.16.14 W	1" 5/16	27 × 2	50.5	23.1	14	36	250
25	1"	BA.23.16.16 W	1" 5/16	33 × 2	51.5	23.1	14	41	250
30	-	BA.23.20.20 W	1" 5/8	42 × 2	55	24.3	14	50	210
32	1" 1/4	BA.23.20.20 W	1" 5/8	42 × 2	55	24.3	14	50	210
38	1" 1/2	BA.23.24.24 W	1" 7/8	48 × 2	59.5	27.5	15.5	55	140

1) AISI 316L CH = 17

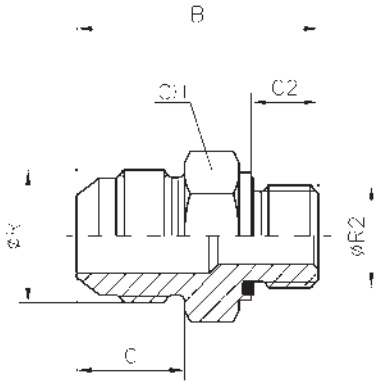

BODY: MALE STUD METRIC PARALLEL GG - RUBBER SEAL - TYPE E DIN 3852

接头体：美制 JIC 外螺纹 74° 外锥 / 公制 ED 圈密封

Ø 钢管外径		订货型号	Ø 螺纹	Ø R2 公制螺纹	B	C	C2	CH	PN
公制	英制								
6	1/4	BA.24.04.02	7/16	10 × 1	30.5	14	8	14	350
6	1/4	BA.24.04.03	7/16	12 × 1.5	35.5	14	12	17	350
8	5/16	BA.24.05.02	1/2	10 × 1	31.5	14.1	8	14	350
8	5/16	BA.24.05.03	1/2	12 × 1.5	35.5	14.1	12	17	350
8	5/16	BA.24.05.04	1/2	14 × 1.5	35.5	14.1	12	19	350
10	3/8	BA.24.06.04	9/16	14 × 1.5	35.5	14.1	12	19	350
10	3/8	BA.24.06.05	9/16	16 × 1.5	37	14.1	12	22	350
12	1/2	BA.24.08.04	3/4	14 × 1.5	38.5	16.7	12	19	350
12	1/2	BA.24.08.05	3/4	16 × 1.5	39.5	16.7	12	22	350
12	1/2	BA.24.08.06	3/4	18 × 1.5	40	16.7	12	24	350
14	-	BA.24.10.06	7/8	18 × 1.5	42.5	19.3	12	24	350
15	-	BA.24.10.06	7/8	18 × 1.5	42.5	19.3	12	24	350
16	5/8	BA.24.10.06	7/8	18 × 1.5	42.5	19.3	12	24	350
14	-	BA.24.10.07	7/8	20 × 1.5	43	19.3	11.5	27	350
15	-	BA.24.10.07	7/8	20 × 1.5	43	19.3	11.5	27	350
16	5/8	BA.24.10.07	7/8	20 × 1.5	43	19.3	11.5	27	350
14	-	BA.24.10.08	7/8	22 × 1.5	45	19.3	14	27	350
15	-	BA.24.10.08	7/8	22 × 1.5	45	19.3	14	27	350
16	5/8	BA.24.10.08	7/8	22 × 1.5	45	19.3	14	27	350
18	-	BA.24.12.08	1" 1/16	22 × 1.5	48	21.9	14	27	350
20	3/4	BA.24.12.08	1" 1/16	22 × 1.5	48	21.9	14	27	350
18	-	BA.24.12.14	1" 1/16	27 × 2	51	21.9	16	32	350
20	3/4	BA.24.12.14	1" 1/16	27 × 2	51	21.9	16	32	350
25	1"	BA.24.16.14	1" 5/16	27 × 2	53.5	23.1	16	36	280
25	1"	BA.24.16.16	1" 5/16	33 × 2	55.5	23.1	18	41	280
30	-	BA.24.20.20	1" 5/8	42 × 2	61	24.3	20	50	210
32	1" 1/4	BA.24.20.20	1" 5/8	42 × 2	61	24.3	20	50	210
38	1" 1/2	BA.24.24.24	1" 7/8	48 × 2	66	27.5	22	55	140

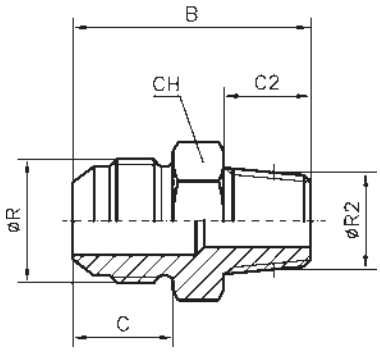

BODY: MALE STUD NPT
接头体：美制 JIC 外螺纹 74° 外锥 / 布锥管外螺纹

Ø 钢管外径		订货型号	Ø 螺纹	Ø R2 NPT	B	C	C2	CH	PN
公制	英制								
6	1/4	BA.25.04.02	7/16	1/8	31	14	9.7	13 1)	350
6	1/4	BA.25.04.04	7/16	1/4	36	14	14.2	14	350
6	1/4	BA.25.04.06	7/16	3/8	37	14	14.2	19	350
6	1/4	BA.25.04.08	7/16	1/2	42.5	14	19	22	350
8	5/16	BA.25.05.02	1/2	1/8	31	14	9.7	14	350
8	5/16	BA.25.05.04	1/2	1/4	36.1	14	14.2	14	350
10	3/8	BA.25.06.02	9/16	1/8	31.8	14.1	9.7	16 2)	350
10	3/8	BA.25.06.04	9/16	1/4	36.3	14.1	14.2	16 2)	350
10	3/8	BA.25.06.06	9/16	3/8	36.3	14.1	14.2	19	350
10	3/8	BA.25.06.08	9/16	1/2	42.5	14.1	19	22	350
12	1/2	BA.25.08.04	3/4	1/4	38.9	16.7	14.2	19	350
12	1/2	BA.25.08.06	3/4	3/8	38.9	16.7	14.2	19	350
12	1/2	BA.25.08.08	3/4	1/2	45.4	16.7	19	22	350
12	1/2	BA.25.08.12	3/4	3/4	47	16.7	19	27	350
14	-	BA.25.10.06	7/8	3/8	43.1	19.3	14.2	24	350
15	-	BA.25.10.06	7/8	3/8	43.1	19.3	14.2	24	350
16	5/8	BA.25.10.06	7/8	3/8	43.1	19.3	14.2	24	350
14	-	BA.25.10.08	7/8	1/2	48	19.3	19	24	350
15	-	BA.25.10.08	7/8	1/2	48	19.3	19	24	350
16	5/8	BA.25.10.08	7/8	1/2	48	19.3	19	24	350
14	-	BA.25.10.12	7/8	3/4	49.5	19.3	19	27	350
15	-	BA.25.10.12	7/8	3/4	49.5	19.3	19	27	350
16	5/8	BA.25.10.12	7/8	3/4	49.5	19.3	19	27	350
18	-	BA.25.12.08	1" 1/16	1/2	52.1	21.9	19	27	350
20	3/4	BA.25.12.08	1" 1/16	1/2	52.1	21.9	19	27	350
18	-	BA.25.12.12	1" 1/16	3/4	52.3	21.9	19	27	350
20	3/4	BA.25.12.12	1" 1/16	3/4	52.3	21.9	19	27	350
18	-	BA.25.12.16	1" 1/16	1"	57.1	21.9	23.9	36	280
20	3/4	BA.25.12.16	1" 1/16	1"	57.1	21.9	23.9	36	280
25	1"	BA.25.16.08	1" 5/16	1/2	53.5	23.1	19	36	280
25	1"	BA.25.16.12	1" 5/16	3/4	53.5	23.1	19	36	280
25	1"	BA.25.16.16	1" 5/16	1"	58.4	23.1	23.9	36	280
30	-	BA.25.20.16	1" 5/8	1"	61.5	24.3	23.9	46	210
32	1" 1/4	BA.25.20.16	1" 5/8	1"	61.5	24.3	23.9	46	210
30	-	BA.25.20.20	1" 5/8	1" 1/4	62.2	24.3	24.6	46	210
32	1" 1/4	BA.25.20.20	1" 5/8	1" 1/4	62.2	24.3	24.6	46	210
38	1" 1/2	BA.25.24.20	1" 7/8	1" 1/4	68.1	27.5	24.6	50	140
38	1" 1/2	BA.25.24.24	1" 7/8	1" 1/2	68.1	27.5	25.4	50	140

1) AISI 316L CH = 14
2) AISI 316L CH = 17

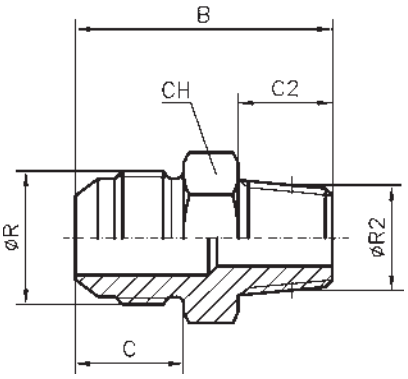

BODY: MALE STUD BSPT (BSP TAPERED)

接头体：美制 JIC 外螺纹 74° 外锥 / 英锥管外螺纹（B.S.P 锥螺纹）

Ø 钢管外径		订货型号	Ø 螺纹	Ø R2 BSPT	B	C	C2	CH	PN
公制	英制								
6	1/4	BA.26.04.02	7/16	1/8	30.7	14	9.7	13 1)	350
6	1/4	BA.26.04.04	7/16	1/4	35.3	14	14.2	14	350
8	5/16	BA.26.05.02	1/2	1/8	30.7	14	9.7	14	350
8	5/16	BA.26.05.04	1/2	1/4	35.3	14	14.2	14	350
10	3/8	BA.26.06.02	9/16	1/8	31.1	14.1	9.7	16 2)	350
10	3/8	BA.26.06.04	9/16	1/4	35.6	14.1	14.2	16 2)	350
10	3/8	BA.26.06.06	9/16	3/8	35.6	14.1	14.2	19	350
10	3/8	BA.26.06.08	9/16	1/2	41.1	14.1	19	22	350
12	1/2	BA.26.08.04	3/4	1/4	38.1	16.7	14.2	19	350
12	1/2	BA.26.08.06	3/4	3/8	38.1	16.7	14.2	19	350
12	1/2	BA.26.08.08	3/4	1/2	43.7	16.7	19	22	350
12	1/2	BA.26.08.12	3/4	3/4	45.7	16.7	19	27	350
14	-	BA.26.10.06	7/8	3/8	41.9	19.3	14.2	24	350
15	-	BA.26.10.06	7/8	3/8	41.9	19.3	14.2	24	350
16	5/8	BA.26.10.06	7/8	3/8	41.9	19.3	14.2	24	350
14	-	BA.26.10.08	7/8	1/2	46.7	19.3	19	24	350
15	-	BA.26.10.08	7/8	1/2	46.7	19.3	19	24	350
16	5/8	BA.26.10.08	7/8	1/2	46.7	19.3	19	24	350
14	-	BA.26.10.12	7/8	3/4	48.3	19.3	19	27	350
15	-	BA.26.10.12	7/8	3/4	48.3	19.3	19	27	350
16	5/8	BA.26.10.12	7/8	3/4	48.3	19.3	19	27	350
18	-	BA.26.12.08	1" 1/16	1/2	50.8	21.9	19	27	350
20	3/4	BA.26.12.08	1" 1/16	1/2	50.8	21.9	19	27	350
18	-	BA.26.12.12	1" 1/16	3/4	50.8	21.9	19	27	350
20	3/4	BA.26.12.12	1" 1/16	3/4	50.8	21.9	19	27	350
18	-	BA.26.12.16	1" 1/16	1"	56.6	21.9	23.9	36	280
20	3/4	BA.26.12.16	1" 1/16	1"	56.6	21.9	23.9	36	280
25	1"	BA.26.16.08	1" 5/16	1/2	53.1	23.1	19	36	280
25	1"	BA.26.16.12	1" 5/16	3/4	53.1	23.1	19	36	280
25	1"	BA.26.16.16	1" 5/16	1"	57.9	23.1	23.9	36	280
30	-	BA.26.20.16	1" 5/8	1"	60.2	24.3	23.9	46	210
32	1" 1/4	BA.26.20.16	1" 5/8	1"	60.2	24.3	23.9	46	210
30	-	BA.26.20.20	1" 5/8	1" 1/4	61	24.3	24.6	46	210
32	1" 1/4	BA.26.20.20	1" 5/8	1" 1/4	61	24.3	24.6	46	210
38	1" 1/2	BA.26.24.20	1" 7/8	1" 1/4	65.5	27.5	24.6	50	140
38	1" 1/2	BA.26.24.24	1" 7/8	1" 1/2	66.3	27.5	25.4	50	140

1) AISI 316L CH = 14
2) AISI 316L CH = 17

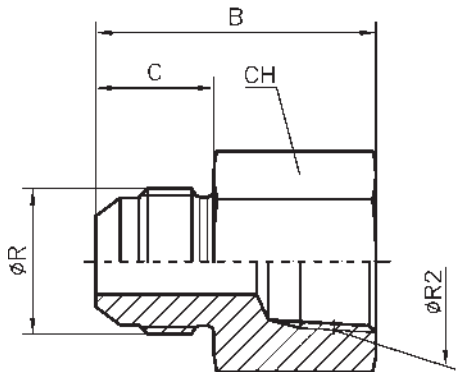

BODY: FEMALE STUD NPT
接头体：美制 JIC 外螺纹 74° 外锥 / 布锥管内螺纹

Ø 钢管外径		订货型号	Ø 螺纹	Ø R2 NPT	B	C	CH	PN
公制	英制							
6	1/4	BA.28.04.02	7/16	1/8	30.2	14	14	350
6	1/4	BA.28.04.04	7/16	1/4	35.3	14	19	350
8	5/16	BA.28.05.02	1/2	1/8	29.7	14	14	350
8	5/16	BA.28.05.04	1/2	1/4	35.3	14	19	350
10	3/8	BA.28.06.04	9/16	1/4	35.6	14.1	19	350
10	3/8	BA.28.06.06	9/16	3/8	37.1	14.1	22	350
12	1/2	BA.28.08.04	3/4	1/4	39.6	16.7	22	350
12	1/2	BA.28.08.06	3/4	3/8	39.6	16.7	22	350
12	1/2	BA.28.08.08	3/4	1/2	45.6	16.7	30	350
14	-	BA.28.10.08	7/8	1/2	48	19.3	30	350
15	-	BA.28.10.08	7/8	1/2	48	19.3	30	350
16	5/8	BA.28.10.08	7/8	1/2	48	19.3	30	350
18	-	BA.28.12.08	1" 1/16	1/2	52.1	21.9	30	350
20	3/4	BA.28.12.08	1" 1/16	1/2	52.1	21.9	30	350
18	-	BA.28.12.12	1" 1/16	3/4	52.3	21.9	36	350
20	3/4	BA.28.12.12	1" 1/16	3/4	52.3	21.9	36	350
25	1"	BA.28.16.16	1" 5/16	1"	59.7	23.1	41	250
30	-	BA.28.20.20	1" 5/8	1" 1/4	63.2	24.3	50	210
32	1" 1/4	BA.28.20.20	1" 5/8	1" 1/4	63.2	24.3	50	210
38	1" 1/2	BA.28.24.24	1" 7/8	1" 1/2	66.5	27.5	60	140

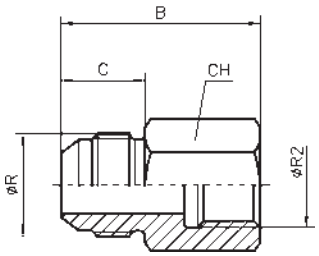

BODY: FEMALE STUD BSPP(B.S.P. TAPERED)
接头体：美制 JIC 外螺纹 74° 外锥 / 英制内螺纹（B.S.P 锥螺纹）

Ø 钢管外径		订货型号	Ø 螺纹	Ø R2 BSPP	B	C	CH	PN
公制	英制							
6	1/4	BA.29.04.02	7/16	1/8	30.2	14	14	350
6	1/4	BA.29.04.04	7/16	1/4	35.3	14	19	350
8	5/16	BA.29.05.02	1/2	1/8	29.7	14	14	350
8	5/16	BA.29.05.04	1/2	1/4	35.3	14	19	350
10	3/8	BA.29.06.04	9/16	1/4	35.6	14.1	19	350
10	3/8	BA.29.06.06	9/16	3/8	37.1	14.1	22	350
10	3/8	BA.29.06.08	9/16	1/2	43	14.1	30	350
12	1/2	BA.29.08.04	3/4	1/4	39.6	16.7	22	350
12	1/2	BA.29.08.06	3/4	3/8	39.6	16.7	22	350
12	1/2	BA.29.08.08	3/4	1/2	45.6	16.7	30	350
14	-	BA.29.10.08	7/8	1/2	48	19.3	30	350
15	-	BA.29.10.08	7/8	1/2	48	19.3	30	350
16	5/8	BA.29.10.08	7/8	1/2	48	19.3	30	350
18	-	BA.29.12.08	1" 1/16	1/2	52.1	21.9	30	350
20	3/4	BA.29.12.08	1" 1/16	1/2	52.1	21.9	30	350
18	-	BA.29.12.12	1" 1/16	3/4	52.3	21.9	36	350
20	3/4	BA.29.12.12	1" 1/16	3/4	52.3	21.9	36	350
25	1"	BA.29.16.16	1" 5/16	1"	59.7	23.1	46	280
30	-	BA.29.20.16	1" 5/8	1"	63.2	24.3	50	210
32	1" 1/4	BA.29.20.16	1" 5/8	1"	63.2	24.3	50	210
30	-	BA.29.20.20	1" 5/8	1" 1/4	63.2	24.3	50	210
32	1" 1/4	BA.29.20.20	1" 5/8	1" 1/4	63.2	24.3	50	210
38	1" 1/2	BA.29.24.20	1" 7/8	1" 1/4	66.5	27.5	60	140
38	1" 1/2	BA.29.24.24	1" 7/8	1" 1/2	66.5	27.5	60	140

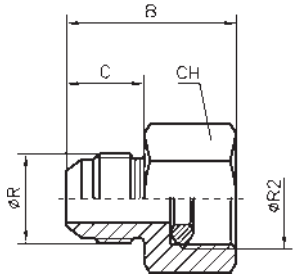

BODY: FEMALE STUD BSPP (B.S.P. PARALLEL) GAUGE COUPLINGS
接头体：美制 JIC 外螺纹 74° 外锥 / 压力表接头（B.S.P 锥螺纹）

Ø 钢管外径		订货型号	Ø 螺纹	Ø R2 BSPP	B	C	CH	PN
公制	英制							
6	1/4	BA.30.04.04	7/16	1/4	33	14	19	350
6	1/4	BA.30.04.08	7/16	1/2	40	14	27	350
8	5/16	BA.30.05.04	1/2	1/4	33	14	19	350
8	5/16	BA.30.05.08	1/2	1/2	40	14	27	350
10	3/8	BA.30.06.04	9/16	1/4	33.1	14.1	19	350
10	3/8	BA.30.06.08	9/16	1/2	40.1	14.1	27	350
12	1/2	BA.30.08.04	3/4	1/4	35.7	16.7	19	350
12	1/2	BA.30.08.08	3/4	1/2	42.7	16.7	27	350

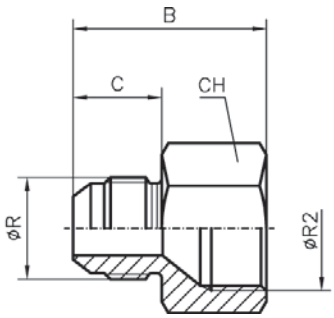

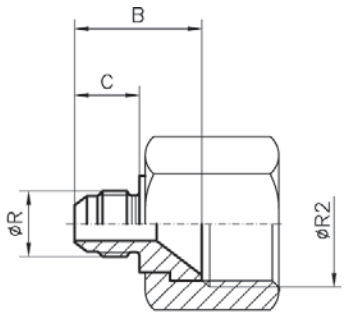

BODY: STUD ADAPTOR

接头体：美制 JIC 外螺纹 74° 外锥 / 油口接头

Ø 钢管外径				订货型号	Ø 螺纹	Ø 螺纹	B	CH	Tipo Type Typ	C	PN
公制	公制	英制	英制								
8	6	3/8	5/16	BA.31.05.04	1/2	7/16	28	19	A	14	350
10	6	3/8	1/4	BA.31.06.04	9/16	7/16	24.6	-	B	14	350
10	8	3/8	5/16	BA.31.06.05	9/16	1/2	29	19	A	14	350
12	6	1/2	1/4	BA.31.08.04	3/4	7/16	25.4	-	B	14	350
12	8	1/2	5/16	BA.31.08.05	3/4	1/2	25.4	-	B	14	350
12	10	1/2	3/8	BA.31.08.06	3/4	9/16	25.4	-	B	14.1	350
14-15-16	6	5/8	1/4	BA.31.10.04	7/8	7/16	26.2	-	B	14	350
14-15-16	8	5/8	5/16	BA.31.10.05	7/8	1/2	26.2	-	B	14	350
14-15-16	10	5/8	3/8	BA.31.10.06	7/8	9/16	26.2	-	B	14.1	350
14-15-16	12	5/8	1/2	BA.31.10.08	7/8	3/4	36.5	27	A	16.7	350
18-20	6	3/4	1/4	BA.31.12.04	1" 1/16	7/16	27.6	-	B	14	350
18-20	8	3/4	5/16	BA.31.12.05	1" 1/16	1/2	27.6	-	B	14	350
18-20	10	3/4	3/8	BA.31.12.06	1" 1/16	9/16	27.6	-	B	14.1	350
18-20	12	3/4	1/2	BA.31.12.08	1" 1/16	3/4	30.2	-	B	16.7	350
18-20	14-15-16	3/4	5/8	BA.31.12.10	1" 1/16	7/8	42.1	32	A	19.3	350
25	6	1"	1/4	BA.31.16.04	1" 5/16	7/16	29.4	-	B	14	280
25	8	1"	5/16	BA.31.16.05	1" 5/16	1/2	29.4	-	B	14	280
25	10	1"	3/8	BA.31.16.06	1" 5/16	9/16	29.4	-	B	14.1	280
25	12	1"	1/2	BA.31.16.08	1" 5/16	3/4	32.1	-	B	16.7	280
25	14-15-16	1"	5/8	BA.31.16.10	1" 5/16	7/8	34.7	-	B	19.3	280
25	18-20	1"	3/4	BA.31.16.12	1" 5/16	1" 1/16	37.3	-	B	21.9	280
30-32	6	1" 1/4	1/4	BA.31.20.04	1" 5/8	7/16	31.2	-	B	14	210
30-32	8	1" 1/4	5/16	BA.31.20.05	1" 5/8	1/2	31.2	-	B	14	210
30-32	10	1" 1/4	3/8	BA.31.20.06	1" 5/8	9/16	31.2	-	B	14.1	210
30-32	12	1" 1/4	1/2	BA.31.20.08	1" 5/8	3/4	33.9	-	B	16.7	210
30-32	14-15-16	1" 1/4	5/8	BA.31.20.10	1" 5/8	7/8	36.5	-	B	19.3	210
30-32	18-20	1" 1/4	3/4	BA.31.20.12	1" 5/8	1" 1/16	39.1	-	B	21.9	210
30-32	25	1" 1/4	1"	BA.31.20.16	1" 5/8	1" 5/16	40.3	-	B	23.1	210
38	6	1" 1/2	1/4	BA.31.24.04	1" 7/8	7/16	32.6	-	B	14	140
38	8	1" 1/2	5/16	BA.31.24.05	1" 7/8	1/2	32.6	-	B	14	140
38	10	1" 1/2	3/8	BA.31.24.06	1" 7/8	9/16	32.6	-	B	14.1	140
38	12	1" 1/2	1/2	BA.31.24.08	1" 7/8	3/4	35.3	-	B	16.7	140
38	14-15-16	1" 1/2	5/8	BA.31.24.10	1" 7/8	7/8	37.9	-	B	19.3	140
38	18-20	1" 1/2	3/4	BA.31.24.12	1" 7/8	1" 1/16	40.5	-	B	21.9	140
38	25	1" 1/2	1"	BA.31.24.16	1" 7/8	1" 5/16	41.7	-	B	23.1	140
38	30-32	1" 1/2	1" 1/4	BA.31.24.20	1" 7/8	1" 5/8	42.9	-	B	24.3	140

TIPO "A"
TYPE "A"
TYP "A"

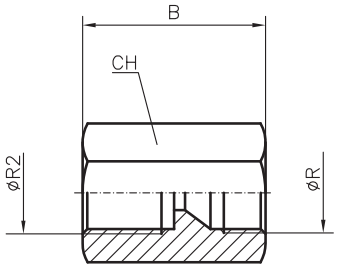

TIPO "B"
TYPE "B"
TYP "B"

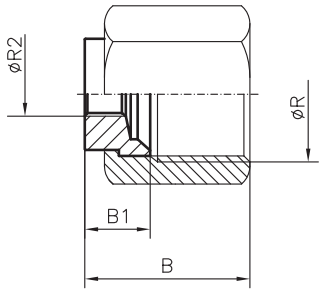

BODY: PRESSURE GAUGE CONNECTOR
接头体：压力表接头

Ø 钢管外径		订货型号	Ø 螺纹	Ø R2 BSPP	B	B1	CH	Tipo Type Typ	PN
公制	英制								
6	1/4	BA.33.04.04	7/16	1/4	29	-	19	A	350
8	5/16	BA.33.05.04	1/2	1/4	29	-	19	A	350
10	3/8	BA.33.06.04	9/16	1/4	29	-	19	A	350
12	1/2	BA.33.08.04	3/4	1/4	32	-	22	A	350
14-15-16	5/8	BA.33.10.04	7/8	1/4	32	-	27	A	350
18-20	3/4	BA.33.12.04	1" 1/16	1/4	25.9	17	32	B	350
25	1"	BA.33.16.04	1" 5/16	1/4	28.4	17.5	41	B	280
30-32	1" 1/4	BA.33.20.04	1" 5/8	1/4	31	19	50	B	210
38	1" 1/2	BA.33.24.04	1" 7/8	1/4	35.8	24	60	B	210

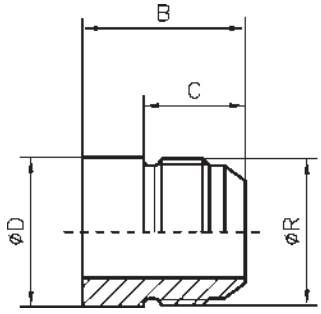

BODY: WELDING
接头体：美制 JIC 焊接接头

Ø 钢管外径		订货型号	Ø 螺纹	B	C	Ø D	PN	
公制	英制							
6	1/4	BA.39.00.04	7/16	23	14	12	350	
8	5/16	BA.39.00.05	1/2	24	14	13	350	
10	3/8	BA.39.00.06	9/16	24	14.1	15	350	
12	1/2	BA.39.00.08	3/4	27	16.7	20	350	
14-15-16	5/8	BA.39.00.10	7/8	30	19.3	23	350	
18-20	3/4	BA.39.00.12	1" 1/16	34	21.9	28	350	
25	1"	BA.39.00.16	1" 5/16	37	23.1	34	280	
30-32	1" 1/4	BA.39.00.20	1" 5/8	40	24.3	42	210	
38	1" 1/2	BA.39.00.24	1" 7/8	45	27.5	48	210	

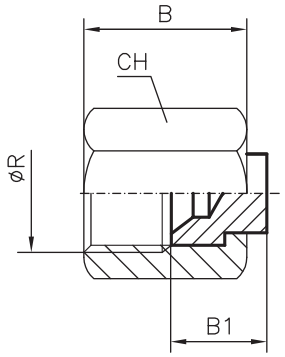

PLUG FOR FITTING
美制 JIC 内锥堵头

Ø 钢管外径		订货型号	Ø 螺纹	B	B1	CH	PN	
公制	英制							
6	1/4	BA.43.00.04	7/16	15.5	9	14	350	
8	5/16	BA.43.00.05	1/2	17	10.5	17	350	
10	3/8	BA.43.00.06	9/16	18.3	10.5	19	350	
12	1/2	BA.43.00.08	3/4	21.3	13	22	350	
14-15-16	5/8	BA.43.00.10	7/8	24.6	14	27	350	
18-20	3/4	BA.43.00.12	1" 1/16	25.9	14	32	350	
25	1"	BA.43.00.16	1" 5/16	28.4	17	41	280	
30-32	1" 1/4	BA.43.00.20	1" 5/8	31	19	50	210	
38	1" 1/2	BA.43.00.24	1" 7/8	35.8	21	60	240	

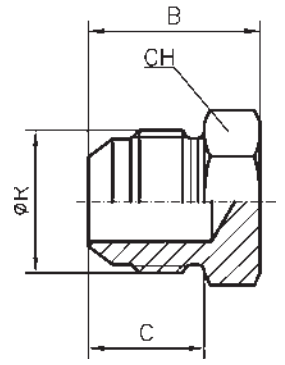

PLUG FOR TUBE
美制 JIC 外螺纹 74° 外锥堵头

Ø 钢管外径		订货型号	Ø 螺纹	B	C	CH	PN	
公制	英制							
6	1/4	BA.45.00.04	7/16	20.3	14	13 1)	350	
8	5/16	BA.45.00.05	1/2	20.3	14	14	350	
10	3/8	BA.45.00.06	9/16	21.3	14.1	16 2)	350	
12	1/2	BA.45.00.08	3/4	23.9	16.7	19	350	
14-15-16	5/8	BA.45.00.10	7/8	27.9	19.3	24	350	
18-20	3/4	BA.45.00.12	1" 1/16	32.5	21.9	27	350	
25	1"	BA.45.00.16	1" 5/16	33.8	23.1	36	280	
30-32	1" 1/4	BA.45.00.20	1" 5/8	36.8	24.3	46	210	
38	1" 1/2	BA.45.00.24	1" 7/8	41.9	27.5	50	140	

1) AISI 316L CH = 12
2) AISI 316L CH = 17

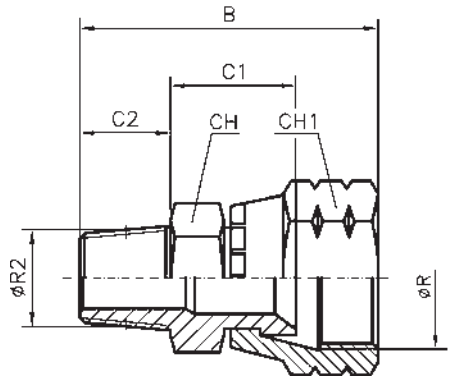

BODY: MALE STUD ADAPTOR NPT WITH ROTARY NUT JIC

接头体：美制 JIC 内螺纹 /NPT 布锥外螺纹

Ø 钢管外径		订货型号	Ø 螺纹	Ø R2 NPT	B	C1	C2	CH	CH1	PN
公制	英制									
6	1/4	BA.46.04.02	7/16	1/8	34.2	15.8	9.7	13 1)	17	350
6	1/4	BA.46.04.04	7/16	1/4	39.2	16.3	14.2	14	17	350
8	5/16	BA.46.05.02	1/2	1/8	37	17.8	9.7	13 2)	19	350
8	5/16	BA.46.05.04	1/2	1/4	42.1	18.4	14.2	14	19	350
10	3/8	BA.46.06.02	9/16	1/8	37.6	18.4	9.7	13	19	350
10	3/8	BA.46.06.04	9/16	1/4	42.1	18.4	14.2	14	19	350
10	3/8	BA.46.06.06	9/16	3/8	42.2	18.5	14.2	19	19	350
10	3/8	BA.46.06.08	9/16	1/2	47	18.5	19	22	19	350
12	1/2	BA.46.08.04	3/4	1/4	45.4	20.5	14.2	19	24	350
12	1/2	BA.46.08.06	3/4	3/8	45.4	20.5	14.2	19	24	350
12	1/2	BA.46.08.08	3/4	1/2	51.9	22.2	19	22	24	350
12	1/2	BA.46.08.12	3/4	3/4	51.9	22.2	19	27	24	350
14-15-16	5/8	BA.46.10.06	7/8	3/8	48.5	21.6	14.2	22	27	350
14-15-16	5/8	BA.46.10.08	7/8	1/2	53.5	21.8	19	22	27	350
14-15-16	5/8	BA.46.10.12	7/8	3/4	53.5	21.8	19	27	27	350
18-20	3/4	BA.46.12.08	1" 1/16	1/2	58	24.7	19	27	32	350
18-20	3/4	BA.46.12.12	1" 1/16	3/4	58	24.7	19	27	32	350
25	1"	BA.46.16.12	1" 5/16	3/4	60	25.9	19	32	38 3)	280
25	1"	BA.46.16.16	1" 5/16	1"	64.9	25.9	23.9	36	38 3)	280
30-32	1" 1/4	BA.46.20.16	1" 5/8	1"	68.1	28.3	23.9	41	50	210
30-32	1" 1/4	BA.46.20.20	1" 5/8	1" 1/4	70.8	30.3	24.6	46	50	210
38	1" 1/2	BA.46.24.24	1" 7/8	1" 1/2	76.9	32.3	26	50	60	210

1) AISI 316L CH = 12
2) AISI 316L CH = 14
3) AISI 316L CH1 = 41

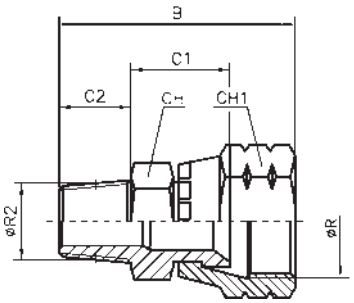

BODY: MALE STUD ADAPTOR BSPT (BSP TAPERED) WITH ROTARY NUT JIC

接头体：美制 JIC 内螺纹 / 英锥管外螺纹（BSP 锥螺纹）

Ø 钢管外径		订货型号	Ø 螺纹	Ø R2 BSPT	B	C1	C2	CH	CH1	PN
公制	英制									
6	1/4	BA.47.04.02	7/16	1/8	33.9	15.5	9.7	13 1)	17	350
6	1/4	BA.47.04.04	7/16	1/4	38.5	15.6	14.2	14	17	350
8	5/16	BA.47.05.02	1/2	1/8	36.8	17.6	9.7	13	19	350
8	5/16	BA.47.05.04	1/2	1/4	41.3	17.6	14.2	14	19	350
10	3/8	BA.47.06.04	9/16	1/4	41.5	17.8	14.2	14	19	350
10	3/8	BA.47.06.06	9/16	3/8	41.5	17.8	14.2	19	19	350
12	1/2	BA.47.08.04	3/4	1/4	44.6	19.7	14.2	19	24	350
12	1/2	BA.47.08.06	3/4	3/8	44.6	19.7	14.2	19	24	350
12	1/2	BA.47.08.08	3/4	1/2	49.4	19.7	19	22	24	350
14-15-16	5/8	BA.47.10.06	7/8	3/8	47.3	20.4	14.2	22	27	350
14-15-16	5/8	BA.47.10.08	7/8	1/2	52.1	20.4	19	22	27	350
14-15-16	5/8	BA.47.10.12	7/8	3/4	54.1	22.4	19	27	27	350
18-20	3/4	BA.47.12.08	1" 1/16	1/2	56.7	23.4	19	27	32	350
18-20	3/4	BA.47.12.12	1" 1/16	3/4	56.7	23.4	19	27	32	350
18-20	3/4	BA.47.12.16	1" 1/16	1"	61.6	23.4	23.9	36	32	350
25	1"	BA.47.16.12	1" 5/16	3/4	59.6	25.5	19	32	38 2)	280
25	1"	BA.47.16.16	1" 5/16	1"	64.4	25.4	23.9	36	38 2)	280
30-32	1" 1/4	BA.47.20.20	1" 5/8	1" 1/4	69.6	29.1	24.6	46	50	210
38	1" 1/2	BA.47.24.24	1" 7/8	1" 1/2	75.7	31.1	26	50	60	210

1) AISI 316L CH = 12
2) AISI 316L CH1 = 41

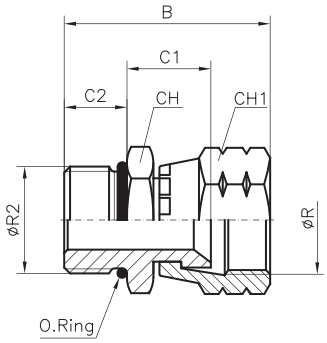

BODY: MALE STUD ADAPTOR UNF-2A WITH ROTARY NUT JIC

接头体：美制 JIC 内螺纹 /UNF 外螺纹

Ø 钢管外径		订货型号	Ø 螺纹	Ø R2 UNF	B	C1	C2	CH	CH1	PN
公制	英制									
6	1/4	BA.48.04.04	7/16	7/16	32	14.2	9.1	14	17	350
8	5/16	BA.48.05.05	1/2	1/2	34.1	15.5	9.1	16 1)	19	350
10	3/8	BA.48.06.06	9/16	9/16	35.8	16.4	9.9	17	19	350
12	1/2	BA.48.08.08	3/4	3/4	40.2	18.5	11.1	22	24	350
14-15-16	5/8	BA.48.10.10	7/8	7/8	44.2	18.8	12.7	27	27	350
18-20	3/4	BA.48.12.12	1" 1/16	1" 1/16	49.6	20.3	15.1	32	32	350
25	1"	BA.48.16.16	1" 5/16	1" 5/16	52.2	22.1	15.1	38 2)	38 2)	280
30-32	1" 1/4	BA.48.20.20	1" 5/8	1" 5/8	58.1	27.2	15.1	50	50	210
38	1" 1/2	BA.48.24.24	1" 7/8	1" 7/8	66.9	33.2	15.1	55	60	210

1) AISI 316L CH = 17
2) AISI 316L CH/CH1 = 41

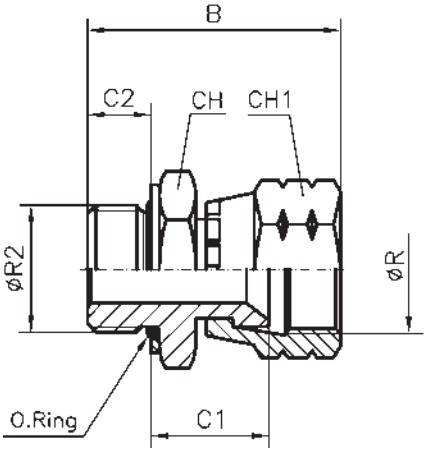

BODY: MALE STUD ADAPTOR BSPP (BSP PARALLEL) WITH ROTARY NUT JIC

接头体：美制 JIC 内螺纹 / 英管外螺纹平面密封（BSP 锥螺纹）

Ø 钢管外径		订货型号	Ø 螺纹	Ø R2 BSPP	B	C1	C2	CH	CH1	PN
公制	英制									
6	1/4	BA.49.04.02	7/16	1/8	31.4	16.4	6.3	16 1)	17	350
6	1/4	BA.49.04.04	7/16	1/4	34.6	16.4	9.5	19	17	350
6	1/4	BA.49.04.06	7/16	3/8	34.6	16.4	9.5	22	17	350
8	5/16	BA.49.05.02	1/2	1/8	33.6	17.8	6.3	16 1)	19	350
8	5/16	BA.49.05.04	1/2	1/4	37.5	18.5	9.5	19	19	350
8	5/16	BA.49.05.06	1/2	3/8	37.5	18.5	9.5	22	19	350
10	3/8	BA.49.06.04	9/16	1/4	38	19	9.5	19	19	350
10	3/8	BA.49.06.06	9/16	3/8	39	20	9.5	22	19	350
10	3/8	BA.49.06.08	9/16	1/2	42.5	20	13	27	19	350
12	1/2	BA.49.08.04	3/4	1/4	41.2	21	9.5	19	24	350
12	1/2	BA.49.08.06	3/4	3/8	41.7	21.5	9.5	22	24	350
12	1/2	BA.49.08.08	3/4	1/2	46.2	22.5	13	27	24	350
14-15-16	5/8	BA.49.10.06	7/8	3/8	44.2	22	9.5	22	27	350
14-15-16	5/8	BA.49.10.08	7/8	1/2	47.9	22.2	13	30	27	350
14-15-16	5/8	BA.49.10.12	7/8	3/4	47.9	22.2	13	36	27	350
18-20	3/4	BA.49.12.08	1" 1/16	1/2	50.3	23	13	30	32	350
18-20	3/4	BA.49.12.12	1" 1/16	3/4	50.3	23	13	36	32	350
18-20	3/4	BA.49.12.16	1" 1/16	1"	54	23.7	16	46	32	350
25	1"	BA.49.16.12	1" 5/16	3/4	55.6	27.5	13	36	38 2)	280
25	1"	BA.49.16.16	1" 5/16	1"	58.6	27.5	16	46	38 2)	280
25	1"	BA.49.16.20	1" 5/16	1" 1/4	58.6	27.5	16	50	38 2)	280
30-32	1" 1/4	BA.49.20.16	1" 5/8	1"	61.9	30	16	46	50	210
30-32	1" 1/4	BA.49.20.20	1" 5/8	1" 1/4	64.9	33	16	50	50	175
38	1" 1/2	BA.49.24.20	1" 7/8	1" 1/4	70.1	35.5	16	50	60	140
38	1" 1/2	BA.49.24.24	1" 7/8	1" 1/2	70.1	35.5	16	55	60	140

1) AISI 316L CH = 17
2) AISI 316L CH1 = 41

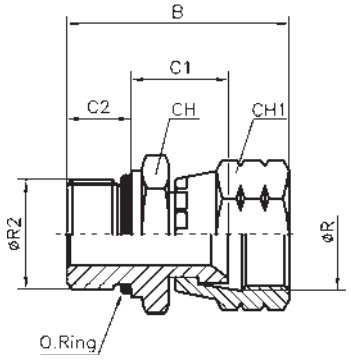

BODY: MALE STUD ADAPTOR (METRIC PARALLEL) ISO 6149-3 WITH ROTARY NUT JIC

接头体：美制 JIC 内螺纹 / 公制轻型 ISO 6149-3 平面密封（公制圆柱螺纹）

Ø 钢管外径		订货型号	Ø 螺纹	Ø R2 公制螺纹	B	C1	C2	CH	CH1	PN
公制	英制									
6	1/4	BA.50.04.02	7/16	10x1	33.6	16.4	8.5	16 1)	17	350
8	5/16	BA.50.05.03	1/2	12x1.5	37.7	17.2	11	19	19	350
10	3/8	BA.50.06.04	9/16	14x1.5	38.5	18	11	19	19	350
12	1/2	BA.50.08.05	3/4	16x1.5	43	20.8	11.5	22	24	350
12	1/2	BA.50.08.06	3/4	18x1.5	44.6	21.4	12.5	24	24	350
14-15-16	5/8	BA.50.10.06	7/8	18x1.5	46	20.8	12.5	24	27	350
14-15-16	5/8	BA.50.10.08	7/8	22x1.5	46.5	20.8	13	27	27	350
18-20	3/4	BA.50.12.08	1" 1/16	22x1.5	52.9	25.6	13	27	32	350
18-20	3/4	BA.50.12.14	1" 1/16	27x2	54.2	23.9	16	36	32	350
25	1"	BA.50.16.14	1" 5/16	27x2	56	24.9	16	36	38 2)	280
25	1"	BA.50.16.16	1" 5/16	33x2	56.3	25.2	16	41	38 2)	280
30-32	1" 1/4	BA.50.20.20	1" 5/8	42x2	62.6	30.7	16	50	50	210
38	1" 1/2	BA.50.24 24	1" 7/8	48x2	72	35.9	17.5	55	60	140

1) AISI 316L CH = 17
2) AISI 316L CH1 = 41

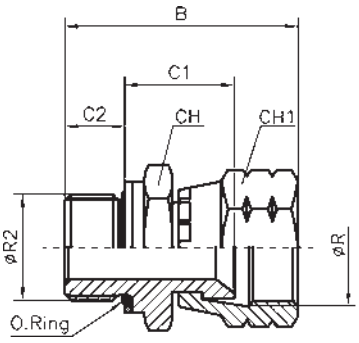

BODY: MALE STUD ADAPTOR (METRIC PARALLEL) O-RING SEAL RING WITH ROTARY NUT JIC

接头体：美制 JIC 内螺纹 / 公制 O 型圈密封外螺纹（公制圆柱螺纹）

Ø 钢管外径		订货型号	Ø 螺纹	Ø R2 公制螺纹	B	C1	C2	CH	CH1	PN
公制	英制									
6	1/4	BA.50.04.02 W	7/16	10 × 1	33.6	17.4	7.5	16 1)	17	350
8	5/16	BA.50.05.03 W	1/2	12 × 1.5	37.7	18.7	9.5	19	19	350
10	3/8	BA.50.06.04 W	9/16	14 × 1.5	38.5	19.5	9.5	19	19	350
12	1/2	BA.50.08.05 W	3/4	16 × 1.5	43	22.3	10	22	24	350
12	1/2	BA.50.08.06 W	3/4	18 × 1.5	44.6	22.9	11	24	24	350
14-15-16	5/8	BA.50.10.06 W	7/8	18 × 1.5	46	22.3	11	24	27	350
14-15-16	5/8	BA.50.10.08 W	7/8	22 × 1.5	46.5	22.3	11.5	27	27	350
18-20	3/4	BA.50.12.08 W	1" 1/16	22 × 1.5	52.9	27.1	11.5	27	32	350
18-20	3/4	BA.50.12.14 W	1" 1/16	27 × 2	54.2	25.9	14	36	32	350
25	1"	BA.50.16.14 W	1" 5/16	27 × 2	56	26.9	14	36	38 2)	250
25	1"	BA.50.16.16 W	1" 5/16	33 × 2	56.3	27.2	14	41	38 2)	250
30-32	1" 1/4	BA.50.20.20 W	1" 5/8	42 × 2	62.6	32.7	14	50	50	210
38	1" 1/2	BA.50.24.24 W	1" 7/8	48 × 2	72	37.9	15.5	55	60	140

1) AISI 316L CH = 17
2) AISI 316L CH1 = 41

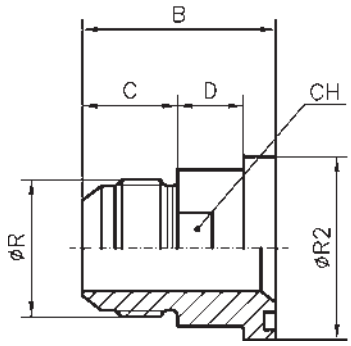

FLANGE ADAPTOR - 3000 PSI
美制 JIC 法兰接头

Ø 钢管外径		订货型号	Ø 螺纹	Ø R2	B	C	D	CH	PN
公制	英制								
12	1/2	BA.51.08.08	3/4	30.2	37.6	16.7	14.3	21	350
18	3/4	BA.51.12.12	1" 1/16	38.1	44.6	21.9	16.1	27	350
20	3/4	BA.51.12.12	1" 1/16	38.1	44.6	21.9	16.1	27	350
25	1"	BA.51.16.16	1" 5/16	44.5	47	23.1	16	34	280
25	1"	BA.51.20.16	1" 5/16	50.8	49	23.1	18	36	280
30	1" 1/4	BA.51.20.20	1" 5/8	50.8	50	24.3	17.8	38	210
32	1" 1/4	BA.51.20.20	1" 5/8	50.8	50	24.3	17.8	38	210
38	1" 1/2	BA.51.24.24	1" 7/8	60.3	53.5	27.5	18.1	45	140

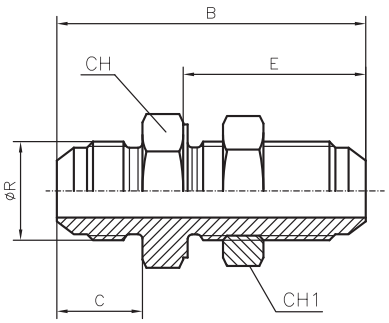

BODY: BULKHEAD CONNECTION
接头体：美制 JIC 外螺纹 74° 外锥过壁接头

Ø 钢管外径		订货型号	Ø 螺纹	B	C	CH	CH1	E	PN
公制	英制								
6	1/4	BA.53.00.04	7/16	52.6	14	17	17	31.5	350
8	5/16	BA.53.00.05	1/2	52.6	14	19	19	31.5	350
10	3/8	BA.53.00.06	9/16	55.4	14.1	22	22	33.5	350
12	1/2	BA.53.00.08	3/4	62	16.7	24	24	37.6	350
14	-	BA.53.00.10	7/8	69.6	19.3	30	30	41.1	350
15	-	BA.53.00.10	7/8	69.6	19.3	30	30	41.1	350
16	5/8	BA.53.00.10	7/8	69.6	19.3	30	30	41.1	350
18	-	BA.53.00.12	1" 1/16	78.5	21.9	36	36	45.4	350
20	3/4	BA.53.00.12	1" 1/16	78.5	21.9	36	36	45.4	350
25	1"	BA.53.00.16	1" 5/16	79.8	23.1	41	41	45.4	280
30	-	BA.53.00.20	1" 5/8	84.1	24.3	50	50	46.7	210
32	1" 1/4	BA.53.00.20	1" 5/8	84.1	24.3	50	50	46.7	210
38	1" 1/2	BA.53.00.24	1" 7/8	89.4	27.5	55	55	47	140

MAXIMUM BULKHEAD THICKNESS = 9.5 mm.
过壁螺母最大厚度 = 9.5mm

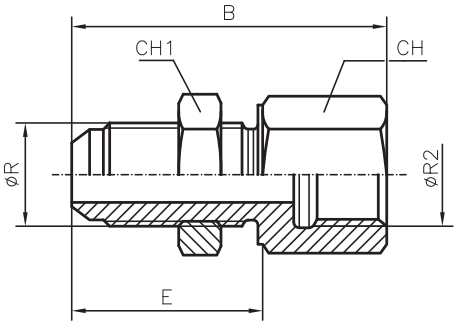

BODY: BULKHEAD CONNECTION MALE-FEMALE BSPP (BSP PARALLEL)

接头体：美制 JIC 外螺纹 74° 外锥 / 英制内螺纹过壁接头（B.S.P 锥螺纹）

Ø 钢管外径		订货型号	Ø 螺纹	Ø R2 BSPP	B	CH	CH1	E	PN
公制	英制								
12	1/2	BA.55.08.06	3/4	3/8	59.6	24	24	37.6	350
14	-	BA.55.10.08	7/8	1/2	67.8	30	30	41.1	350
15	-	BA.55.10.08	7/8	1/2	67.8	30	30	41.1	350
16	5/8	BA.55.10.08	7/8	1/2	67.8	30	30	41.1	350

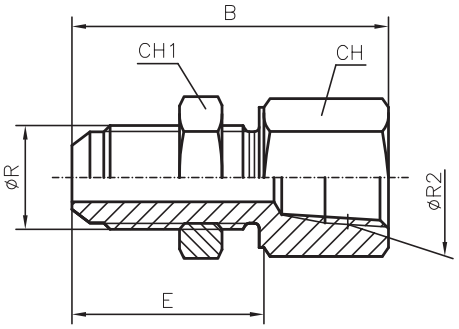

BODY: BULKHEAD CONNECTION MALE-FEMALE NPT

接头体：美制 JIC 外螺纹 74° 外锥 /NPT 内螺纹

Ø 钢管外径		订货型号	Ø 螺纹	Ø R2 NPT	B	CH	CH1	E	PN
公制	英制								
6	1/4	BA.56.04.02	7/16	1/8	46.7	17	17	31.5	350
6	1/4	BA.56.04.04	7/16	1/4	50.3	19	17	31.5	350
10	3/8	BA.56.06.04	9/16	1/4	52.3	22	22	33.5	350
12	1/2	BA.56.08.06	3/4	3/8	59.4	24	24	37.6	350
14	-	BA.56.10.08	7/8	1/2	'67.6	30	30	41.1	350
15	-	BA.56.10.08	7/8	1/2	67.6	30	30	41.1	350
16	5/8	BA.56.10.08	7/8	1/2	67.6	30	30	41.1	350
18	-	BA.56.12.12	1" 1/16	3/4	73.9	36	36	45.4	350
20	3/4	BA.56.12.12	1" 1/16	3/4	73.9	36	36	45.4	350
25	1"	BA.56.16.16	1" 5/16	1"	78.5	41	41	45.4	250

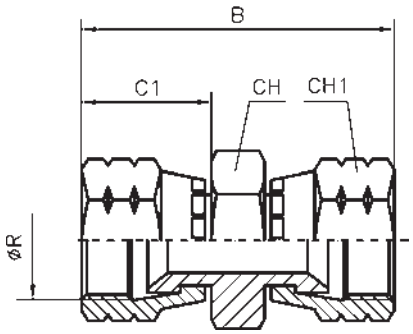

BODY: FEMALE ADAPTOR
接头体：美制 JIC 内螺纹 74° 内锥

Ø 钢管外径		订货型号	Ø 螺纹	B	C1	CH	CH1	PN
公制	英制							
12	1/2	BA.57.00.08	3/4	54.5	24	22	24	350
14-15-16	5/8	BA.57.00.10	7/8	59.5	26	27	27	350
18-20	3/4	BA.57.00.12	1" 1/16	67.5	28	32	32	350

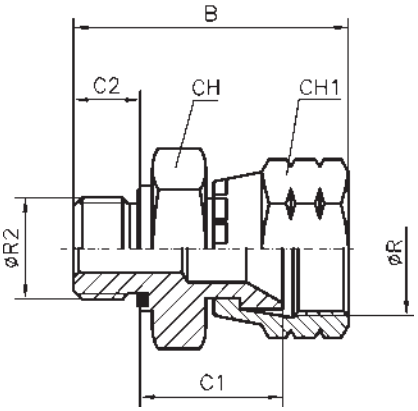

BODY: MALE STUD ADAPTOR BSPP (BSP PARALLEL) WITH ROTARY NUT JIC GG-RUBBER SEAL - TYPE E DIN 3852
接头体：美制内螺纹 74° 内锥 / BSPP 外螺纹 ED 圈密封

Ø 钢管外径		订货型号	Ø 螺纹	Ø R2 BSPP	B	C1	C2	CH	CH1	PN
公制	英制									
6	1/4	BA.58.04.02	7/16	1/8	32.9	16.2	8	14	17	350
6	1/4	BA.58.04.04	7/16	1/4	37.1	16.4	12	19	17	350
8	5/16	BA.58.05.02	1/2	1/8	35.5	18	8	14	19	350
8	5/16	BA.58.05.04	1/2	1/4	40	18.5	12	19	19	350
10	3/8	BA.58.06.04	9/16	1/4	40.5	19	12	19	19	350
10	3/8	BA.58.06.06	9/16	3/8	42	20.5	12	22	19	350
12	1/2	BA.58.08.04	3/4	1/4	44.2	21.5	12	19	24	350
12	1/2	BA.58.08.06	3/4	3/8	44.7	22	12	22	24	350
14-15-16	5/8	BA.58.10.06	7/8	3/8	47.4	22.7	12	24	27	350
14-15-16	5/8	BA.58.10.08	7/8	1/2	49.9	23.2	14	27	27	350
18-20	3/4	BA.58.12.08	1" 1/16	1/2	52.3	24	14	27	32	350
18-20	3/4	BA.58.12.12	1" 1/16	3/4	54.3	24	16	32	32	350
25	1"	BA.58.16.12	1" 5/16	3/4	59.6	28.5	16	32	38 1)	280
25	1"	BA.58.16.16	1" 5/16	1"	61.6	28.5	18	41	38 1)	280
30-32	1" 1/4	BA.58.20.16	1" 5/8	1"	67.4	33.5	18	41	50	210
30-32	1" 1/4	BA.58.20.20	1" 5/8	1" 1/4	69.4	33.5	20	50	50	210
38	1" 1/2	BA.58.24.20	1" 7/8	1" 1/4	74.6	36	20	50	60	140
38	1" 1/2	BA.58.24.24	1" 7/8	1" 1/2	76.6	36	22	55	60	140

1) AISI 316L CH1 = 41

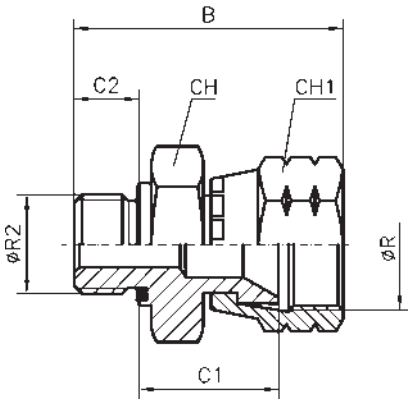

BODY: MALE STUD ADAPTOR METRIC PARALLEL WITH ROTARY NUT JIC GG-RUBBER SEAL - TYPE E DIN 3852

接头体：美制内螺纹 74° 内锥 / 公制外螺纹 ED 圈密封

Ø 钢管外径		订货型号	Ø 螺纹	Ø R2 公制螺纹	B	C1	C2	CH	CH1	PN
公制	英制									
6	1/4	BA.61.04.02	7/16	10 × 1	32.1	15.4	8	14	17	350
8	5/16	BA.61.05.03	1/2	12 × 1.5	38.2	16.7	12	17	19	350
10	3/8	BA.61.06.04	9/16	14 × 1.5	39	17.5	12	19	19	350
12	1/2	BA.61.08.05	3/4	16 × 1.5	43	20.3	12	22	24	350
12	1/2	BA.61.08.06	3/4	18 × 1.5	43.6	20.9	12	24	24	350
14-15-16	5/8	BA.61.10.06	7/8	18 × 1.5	45.6	20.9	12	24	27	350
14-15-16	5/8	BA.61.10.08	7/8	22 × 1.5	48	21.3	14	27	27	350
18-20	3/4	BA.61.12.08	1" 1/16	22 × 1.5	54.4	26.1	14	27	32	350
18-20	3/4	BA.61.12.14	1" 1/16	27 × 2	56.7	26.4	16	32	32	350
25	1"	BA.61.16.16	1" 5/16	33 × 2	59.5	26.4	18	41	38 1)	280
30-32	1" 1/4	BA.61.20.20	1" 5/8	42 × 2	66.6	30.7	20	50	50	210

1) AISI 316L CH 1 = 41

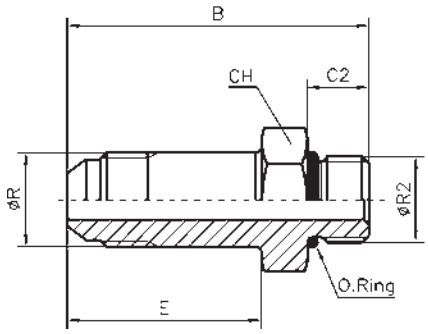

BODY: STRAIGHT THREAD CONNECTOR LONG - UNF

接头体：加长型美制 JIC 外螺纹 74° 外锥 / UNF 外螺纹

Ø 钢管外径		订货型号	Ø 螺纹	Ø R2 UNF	B	C2	E	CH	PN
公制	英制								
6	1/4	BA.62.04.04	7/16	7/16	52.8	9.1	35.3	14	350
10	3/8	BA.62.06.06	9/16	9/16	58.7	9.9	39.6	17	350
12	1/2	BA.62.08.08	3/4	3/4	68.6	11.1	47.8	22	350
14	-	BA.62.10.10	7/8	7/8	77.2	12.7	53.1	27	350
15	-	BA.62.10.10	7/8	7/8	77.2	12.7	53.1	27	350
16	5/8	BA.62.10.10	7/8	7/8	77.2	12.7	53.1	27	350
18	-	BA.62.12.12	1" 1/16	1" 1/16	91.7	15.1	63.5	32	350
20	3/4	BA.62.12.12	1" 1/16	1" 1/16	91.7	15.1	63.5	32	350
25	1"	BA.62.16.16	1" 5/16	1" 5/16	101	15.1	72.1	38 1)	280
30	-	BA.62.20.20	1" 5/8	1" 5/8	119.1	15.1	88.1	50	210
32	1" 1/4	BA.62.20.20	1" 5/8	1" 5/8	119.1	15.1	88.1	50	210

1) AISI 316L CH = 41

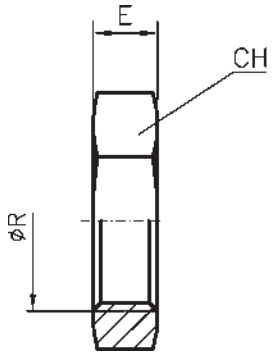

BULKHEAD NUT
过壁螺母

Ø 钢管外径		订货型号	Ø 螺纹	E	CH	
公制	英制					
6	1/4	BA.99.00.04	7/16	6.4	17	
8	5/16	BA.99.00.05	1/2	6.4	19	
10	3/8	BA.99.00.06	9/16	6.9	22	
12	1/2	BA.99.00.08	3/4	7.9	24	
14-15-16	5/8	BA.99.00.10	7/8	9.1	30	
18-20	3/4	BA.99.00.12	1" 1/16	10.4	36	
25	1"	BA.99.00.16	1" 5/16	10.4	41	
30-32	1" 1/4	BA.99.00.20	1" 5/8	10.4	50	
38	1" 1/2	BA.99.00.24	1" 7/8	10.4	55	

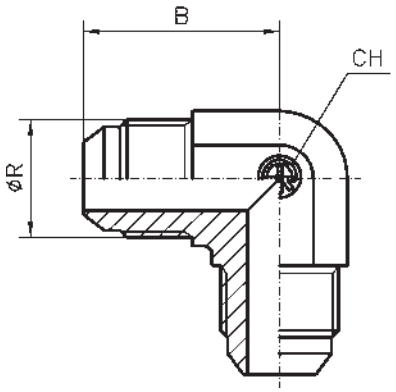

BODY: ELBOW COUPLING 90°
接头体：美制 JIC 外螺纹 74° 外锥直角接头

Ø 钢管外径		订货型号	Ø R-UNF	B	CH	PN	
公制	英制						
6	1/4	ST. 01.00.04	7/16	22.6	11 1)	350	
8	5/16	ST. 01.00.05	1/2	24.1	13 2)	350	
10	3/8	ST. 01.00.06	9/16	26.9	14	350	
12	1/2	ST. 01.00.08	3/4	31.8	19	350	
14	-	ST. 01.00.10	7/8	36.8	22	350	
15	-	ST. 01.00.10	7/8	36.8	22	350	
16	5/8	ST. 01.00.10	7/8	36.8	22	350	
18	-	ST. 01.00.12	1" 1/16	42.2	27	350	
20	3/4	ST. 01.00.12	1" 1/16	42.2	27	350	
25	1"	ST. 01.00.16	1" 5/16	46	33	280	
30	-	ST. 01.00.20	1" 5/8	52.3	41	210	
32	1" 1/4	ST. 01.00.20	1" 5/8	52.3	41	210	
38	1" 1/2	ST. 01.00.24	1" 7/8	59.2	48	140	

1) – 2) AISI 316L CH = 14 B = 26.9

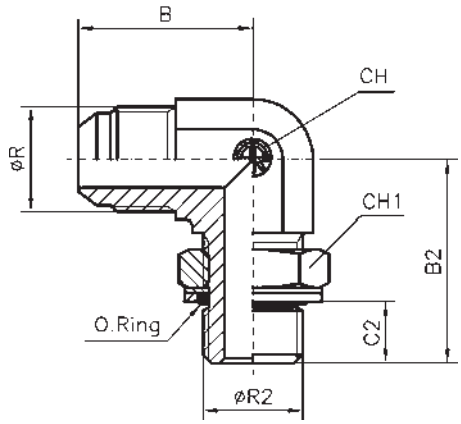

BODY: ELBOW MALE COUPLING 90° BSPP (BSP PARALLEL)

接头体：美制 JIC 外螺纹 74° 外锥 / BSPP 外螺纹直角通

Ø 钢管外径		订货型号	Ø 螺纹	Ø R2 BSPP	B	B2	C2	CH	CH1	PN
公制	英制									
6	1/4	ST. 05.04.02	7/16	1/8	22.6	26	6.3	11 1)	14	350
6	1/4	ST. 05.04.04	7/16	1/4	26.9	32	9.5	14	19	350
6	1/4	ST. 05.04.06	7/16	3/8	26.9	37	9.5	19	22	350
6	1/4	ST. 05.04.08	7/16	1/2	26.9	43	13	22	27	350
8	5/16	ST. 05.05.02	1/2	1/8	24.1	27	6.3	13 2)	14	350
8	5/16	ST. 05.05.04	1/2	1/4	26.9	32	9.5	14	19	350
8	5/16	ST. 05.05.06	1/2	3/8	29	37	9.5	19	22	350
10	3/8	ST. 05.06.04	9/16	1/4	26.9	32	9.5	14	19	350
10	3/8	ST. 05.06.06	9/16	3/8	29	37	9.5	19	22	350
10	3/8	ST. 05.06.08	9/16	1/2	31.1	43	13	22	27	350
12	1/2	ST. 05.08.04	3/4	1/4	31.8	37	9.5	19	19	350
12	1/2	ST. 05.08.06	3/4	3/8	31.8	37	9.5	19	22	350
12	1/2	ST. 05.08.08	3/4	1/2	33.7	43	13	22	27	350
12	1/2	ST. 05.08.12	3/4	3/4	33.7	49.5	13	27	36	350
14	-	ST. 05.10.06	7/8	3/8	36.8	43	9.5	22	22	350
15	-	ST. 05.10.06	7/8	3/8	36.8	43	9.5	22	22	350
16	5/8	ST. 05.10.06	7/8	3/8	36.8	43	9.5	22	22	350
14	-	ST. 05.10.08	7/8	1/2	36.8	43	13	22	27	250
15	-	ST. 05.10.08	7/8	1/2	36.8	43	13	22	27	350
16	5/8	ST. 05.10.08	7/8	1/2	36.8	43	13	22	27	350
14	-	ST. 05.10.12	7/8	3/4	38.9	49.5	13	27	36	250
15	-	ST. 05.10.12	7/8	3/4	38.9	49.5	13	27	36	250
16	5/8	ST. 05.10.12	7/8	3/4	38.9	49.5	13	27	36	250
18	-	ST. 05.12.08	1" 1/16	1/2	42.2	49.5	13	27	27	350
20	3/4	ST. 05.12.08	1" 1/16	1/2	42.2	49.5	13	27	27	350
18	-	ST. 05.12.12	1" 1/16	3/4	42.2	49.5	13	27	36	250
20	3/4	ST. 05.12.12	1" 1/16	3/4	42.2	49.5	13	27	36	250
18	-	ST. 05.12.16	1" 1/16	1"	44.8	52	16	33	41	250
20	3/4	ST. 05.12.16	1" 1/16	1"	44.8	52	16	33	41	250
25	1"	ST. 05.16.12	1" 5/16	3/4	46	52	16	33	36	250
25	1"	ST. 05.16.16	1" 5/16	1"	46	52	16	33	41	250
25	1"	ST. 05.16.20	1" 5/16	1" 1/4	51	57	16	41	50	175
30	-	ST. 05.20.16	1" 5/8	1"	52.3	57	16	41	41	210
32	1" 1/4	ST. 05.20.16	1" 5/8	1"	52.3	57	16	41	41	210
30	-	ST. 05.20.20	1" 5/8	1" 1/4	52.3	57	16	41	50	175
32	1" 1/4	ST. 05.20.20	1" 5/8	1" 1/4	52.3	57	16	41	50	175
38	1" 1/2	ST. 05.24.20	1" 7/8	1" 1/4	59.2	60.5	16	48	50	140
38	1" 1/2	ST. 05.24.24	1" 7/8	1" 1/2	59.2	60.5	16	48	55	140

1) – 2) AI3I 316L CH = 14 B = 26.9 B2 = 28.5

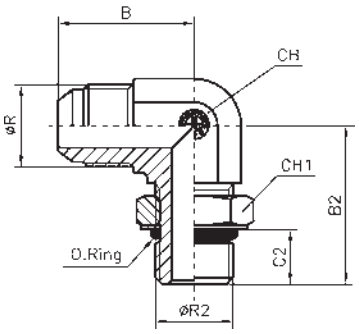

BODY: ELBOW MALE COUPLING 90° UNF 2A
接头体：美制 JIC 外螺纹外锥 / UNF 外螺纹直角通

Ø 钢管外径		订货型号	Ø 螺纹	Ø R2 UNF	B	B2	C2	CH	CH1	PN
公制	英制									
6	1/4	ST. 06.04.04	7/16	7/16	22.6	26.2	9	11 1)	14	350
6	1/4	ST. 06.04.06	7/16	9/16	26.9	31.8	10	14	17	350
8	5/16	ST. 06.05.05	1/2	1/2	24.1	27.7	9	13 2)	16 3)	350
8	5/16	ST. 06.05.06	1/2	9/16	26.9	31.8	10	14	17	350
10	3/8	ST. 06.06.04	9/16	7/16	26.9	30.8	9	14	14	350
10	3/8	ST. 06.06.05	9/16	1/2	26.9	30.8	9	14	16 3)	350
10	3/8	ST. 06.06.06	9/16	9/16	26.9	31.8	10	14	17	350
10	3/8	ST. 06.06.08	9/16	3/4	29	36.8	11	19	22	350
10	3/8	ST. 06.06.10	9/16	7/8	31	43.2	12.7	22	27	350
12	1/2	ST. 06.08.06	3/4	9/16	31.8	33.5	10	19	17	350
12	1/2	ST. 06.08.08	3/4	3/4	31.8	36.8	11	19	22	350
12	1/2	ST. 06.08.10	3/4	7/8	34	43.2	12.7	22	27	350
12	1/2	ST. 06.08.12	3/4	1" 1/16	36.8	49.3	15	27	32	350
14	-	ST. 06.10.08	7/8	3/4	36.8	39.1	11	22	22	350
15	-	ST. 06.10.08	7/8	3/4	36.8	39.1	11	22	22	250
16	5/8	ST. 06.10.08	7/8	3/4	36.8	39.1	11	22	22	350
14	-	ST. 06.10.10	7/8	7/8	36.8	43.2	12.7	22	27	350
15	-	ST. 06.10.10	7/8	7/8	36.8	43.2	12.7	22	27	350
16	5/8	ST. 06.10.10	7/8	7/8	36.8	43.2	12.7	22	27	350
14	-	ST. 06.10.12	7/8	1" 1/16	39.2	49.3	15	27	32	350
15	-	ST. 06.10.12	7/8	1" 1/16	39.2	49.3	15	27	32	350
16	5/8	ST. 06.10.12	7/8	1" 1/16	39.2	49.3	15	27	32	350
18	-	ST. 06.12.08	1" 1/16	3/4	42.2	41.2	11	27	22	350
20	3/4	ST. 06.12.08	1" 1/16	3/4	42.2	41.2	11	27	22	350
18	-	ST. 06.12.10	1" 1/16	7/8	42.2	45.2	12.7	27	27	350
20	3/4	ST. 06.12.10	1" 1/16	7/8	42.2	45.2	12.7	27	27	350
18	-	ST. 06.12.12	1" 1/16	1" 1/16	42.2	49.3	15	27	32	350
20	3/4	ST. 06.12.12	1" 1/16	1" 1/16	42.2	49.3	15	27	32	350
18	-	ST. 06.12.16	1" 1/16	1" 5/16	44.7	52.1	15	33	38 4)	350
20	3/4	ST. 06.12.16	1" 1/16	1" 5/16	44.7	52.1	15	33	38 4)	350
25	1"	ST. 06.16.12	1" 5/16	1" 1/16	46	52.1	15	33	32	280
25	1"	ST. 06.16.16	1" 5/16	1" 5/16	46	52.1	15	33	38 4)	280
25	1"	ST. 06.16.20	1" 5/16	1" 5/8	52.3	57.2	15	41	50	210
30	-	ST. 06.20.20	1" 5/8	1" 5/8	52.3	57.2	15	41	50	210
32	1" 1/4	ST. 06.20.20	1" 5/8	1" 5/8	52.3	57.2	15	41	50	210
38	1" 1/2	ST. 06.24.24	1" 7/8	1" 7/8	59.2	60.7	15	48	55	140

1) - 2) AI3I 316L CH = 14 B = 26.9 B2 = 30.8
3) AI3I 316L CH 1 = 17
4) AISI 316L CH 1 = 41

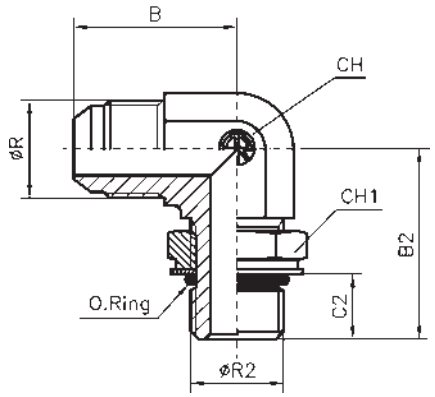

BODY: ELBOW MALE COUPLING 90°
METRIC ISO 6149-3
接头体：美制 JIC 外螺纹 74° 外锥 /
公制轻型 ISO 6149-3 直角通

Ø 钢管外径		订货型号	Ø 螺纹	Ø R2 公制螺纹	B	B2	C2	CH	CH1	PN
公制	英制									
6	1/4	ST. 07.04.02	7/16	10 × 1	22.6	27	8.5	11 1)	14	350
6	1/4	ST. 07.04.03	7/16	12 × 1.5	24.1	29	11	14	17	350
8	5/16	ST. 07.05.02	1/2	10 × 1	26.9	27.5	8.5	14	14	350
8	5/16	ST. 07.05.03	1/2	12 × 1.5	24.1	29	11	13 2)	17	350
8	5/16	ST. 07.05.04	1/2	14 × 1.5	26.9	32	11	14	19	350
10	3/8	ST. 07.06.04	9/16	14 × 1.5	26.9	34	11	14	19	350
10	3/8	ST. 07.06.05	9/16	16 × 1.5	29	36	11.5	19	22	350
12	1/2	ST. 07.08.05	3/4	16 × 1.5	31.8	36	11.5	19	22	350
12	1/2	ST. 07.08.06	3/4	18 × 1.5	31.8	38	12.5	19	24	350
14	-	ST. 07.10.06	7/8	18 × 1.5	36.8	41.5	12.5	22	24	350
15	-	ST. 07.10.06	7/8	18 × 1.5	36.8	41.5	12.5	22	24	350
16	5/8	ST. 07.10.06	7/8	18 × 1.5	36.8	41.5	12.5	22	24	350
14	-	ST. 07.10.07	7/8	20 × 1.5	36.8	42.5	12.5	22	27	350
15	-	ST. 07.10.07	7/8	20 × 1.5	36.8	42.5	12.5	22	27	350
16	5/8	ST. 07.10.07	7/8	20 × 1.5	36.8	42.5	12.5	22	27	350
14	-	ST. 07.10.08	7/8	22 × 1.5	36.8	42.5	12.5	22	27	350
15	-	ST. 07.10.08	7/8	22 × 1.5	36.8	42.5	12.5	22	27	350
16	5/8	ST. 07.10.08	7/8	22 × 1.5	36.8	42.5	12.5	22	27	350
18	-	ST. 07.12.08	1" 1/16	22 × 1.5	42.2	45	12.5	27	27	350
20	3/4	ST. 07.12.08	1" 1/16	22 × 1.5	42.2	45	12.5	27	27	350
18	-	ST. 07.12.14	1" 1/16	27 × 2	42.2	51	15.5	27	32	350
20	3/4	ST. 07.12.14	1" 1/16	27 × 2	42.2	51	15.5	27	32	350
25	1"	ST. 07.16.14	1" 5/16	27 × 2	46	53	15.5	33	32	280
25	1"	ST. 07.16.16	1" 5/16	33 × 2	46	53	15.5	33	41	280
30	-	ST. 07.20.20	1" 5/8	42 × 2	52.3	58	15.5	41	50	210
32	1" 1/4	ST. 07.20.20	1" 5/8	42 × 2	52.3	58	15.5	41	50	210
38	1" 1/2	ST. 07.24.24	1" 7/8	48 × 2	59.2	63.5	17	48	55	140

1) – 2) AISI 316L CH = 14 B = 26.9 B2 = 31.5/34

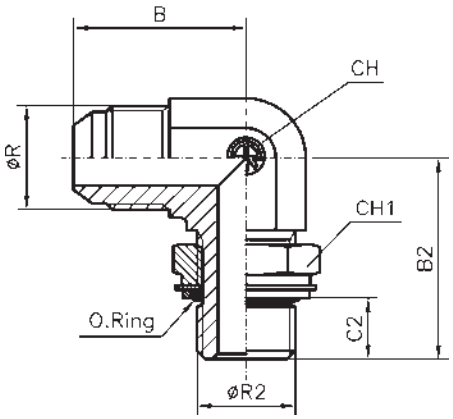

BODY: ELBOW MALE COUPLING 90°
METRIC - O-RING SEAL RING
接头体：美制 JIC 外螺纹 74° 外锥 / 公制外螺纹 O 型圈密封直角通

Ø 钢管外径		订货型号	Ø 螺纹	Ø R2 公制螺纹	B	B2	C2	CH	CH1	PN
公制	英制									
6	1/4	ST. 07.04.02 W	7/16	10x1	22.6	27	7.5	11 1)	14	350
6	1/4	ST. 07.04.03 W	7/16	12x1.5	24.1	29	9.5	11 1)	17	350
8	5/16	ST. 07.05.02 W	1/2	10x1	26.9	26	7.5	14	14	350
8	5/16	ST. 07.05.03 W	1/2	12x1.5	24.1	29	9.5	13 2)	17	350
8	5/16	ST. 07.05.04 W	1/2	14x1.5	26.9	34	9.5	14	19	350
10	3/8	ST. 07.06.04 W	9/16	14x1.5	26.9	34	9.5	14	19	350
10	3/8	ST. 07.06.05 W	9/16	16x1.5	26.9	36	10	19	22	350
12	1/2	ST. 07.08.05 W	3/4	16x1.5	31.8	36	10	19	22	350
12	1/2	ST. 07.08.06 W	3/4	18x1.5	31.8	38	11	19	24	350
14	-	ST. 07.10.06 W	7/8	18x1.5	36.8	41.5	11	22	24	350
15	-	ST. 07.10.06 W	7/8	18x1.5	36.8	41.5	11	22	24	350
16	5/8	ST. 07.10.06 W	7/8	18x1.5	36.8	41.5	11	22	24	350
14	-	ST. 07.10.07 W	7/8	20x1.5	36.8	42.5	11	22	27	350
15	-	ST. 07.10.07 W	7/8	20x1.5	36.8	42.5	11	22	27	350
16	5/8	ST. 07.10.07 W	7/8	20x1.5	36.8	42.5	11	22	27	350
14	-	ST. 07.10.08 W	7/8	22x1.5	36.8	42.5	11	22	27	350
15	-	ST. 07.10.08 W	7/8	22x1.5	36.8	42.5	11	22	27	350
16	5/8	ST. 07.10.08 W	7/8	22x1.5	36.8	42.5	11	22	27	350
18	-	ST. 07.12.08 W	1" 1/16	22x1.5	42.2	45	11	27	27	350
20	3/4	ST. 07.12.08 W	1" 1/16	22x1.5	42.2	45	11	27	27	350
18	-	ST. 07.12.14 W	1" 1/16	27x2	42.2	51	13.5	27	32	350
20	3/4	ST. 07.12.14 W	1" 1/16	27x2	42.2	51	13.5	27	32	350
25	1"	ST. 07.16.14 W	1" 5/16	27x2	46	53	13.5	33	32	250
25	1"	ST. 07.16.16 W	1" 5/16	33x2	46	53	13.5	33	41	250
30	-	ST. 07.20.20 W	1" 5/8	42x2	52.3	58	13.5	41	50	210
32	1" 1/4	ST. 07.20.20 W	1" 5/8	42x2	52.3	58	13.5	41	50	210
38	1" 1/2	ST. 07.24.24 W	1" 7/8	48x2	59.2	63.5	17	48	55	140

1) – 2) AISI 316L CH = 14 B = 26.9 B2 = 31.5/34

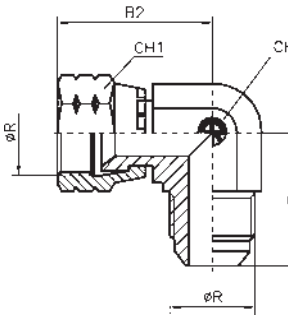

BODY: ELBOW COUPLING 90° WITH ROTARY NUT JIC

接头体：美制 JIC 内螺纹 74° 内锥 / 美制 JIC 外螺纹外锥直角通

Ø 钢管外径		订货型号	Ø 螺纹	B	B2	CH	CH1	PN	
公制	英制								
6	1/4	ST. 09.00.04	7/16	22.6	25.7	11 1)	17	350	
8	5/16	ST. 09.00.05	1/2	24.1	29.5	13 2)	19	350	
10	3/8	ST. 09.00.06	9/16	26.9	32.5	14	19	350	
12	1/2	ST. 09.00.08	3/4	31.8	37.7	19	24	350	
14	-	ST. 09.00.10	7/8	36.8	41.2	22	27	350	
15	-	ST. 09.00.10	7/8	36.8	41.2	22	27	350	
16	5/8	ST. 09.00.10	7/8	36.8	41.2	22	27	350	
18	-	ST. 09.00.12	1" 1/16	42.2	47.3	27	32	350	
20	3/4	ST. 09.00.12	1" 1/16	42.2	47.3	27	32	350	
25	1"	ST. 09.00.16	1" 5/16	46	51.6	33	38 3)	280	
30	-	ST. 09.00.20	1" 5/8	52.3	59.9	41	50	210	
32	1" 1/4	ST. 09.00.20	1" 5/8	52.3	59.9	41	50	210	
38	1" 1/2	ST. 09.00.24	1" 7/8	59.2	68.4	48	60	140	

1) – 2) AISI 316L CH = 14 B = 26.9 B2 = 28.5/30 3)AISI 316L CH1 = 41

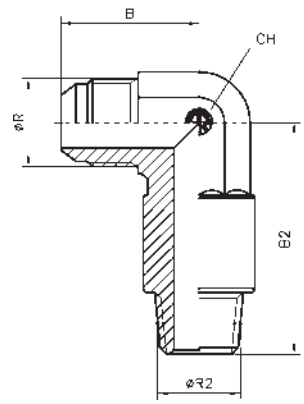

BODY: ELBOW MALE COUPLING 90° NPT - LONG

接头体：美制 JIC 外螺纹 74° 外锥 / NPT 外螺纹加长型直角通

Ø 钢管外径		订货型号	Ø 螺纹	Ø R2 NPT	B	B2	CH	PN	
公制	英制								
6	1/4	ST. 10.04.04	7/16	1/4	22.6	40.1	14	350	
8	5/16	ST. 10.05.02	1/2	1/8	24.1	30.7	14	350	
10	3/8	ST. 10.06.04	9/16	1/4	26.9	40.1	14	350	
12	1/2	ST. 10.08.06	3/4	3/8	31.8	46.2	19	350	
12	1/2	ST. 10.08.08	3/4	1/2	33.8	55.1	22	350	
14	-	ST. 10.10.08	7/8	1/2	36.8	55.1	22	350	
15	-	ST. 10.10.08	7/8	1/2	36.8	55.1	22	350	
16	5/8	ST. 10.10.08	7/8	1/2	36.8	55.1	22	350	
18	-	ST. 10.12.12	1" 1/16	3/4	42.2	62	27	350	
20	3/4	ST. 10.12.12	1" 1/16	3/4	42.2	62	27	350	
25	1"	ST. 10.16.16	1" 5/16	1"	46	72.5	33	280	

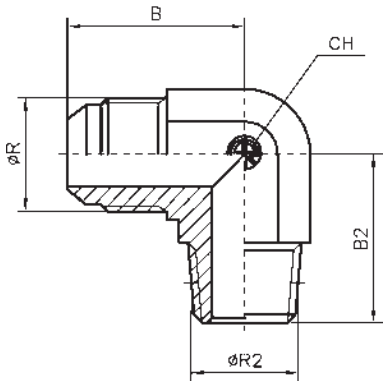

BODY: ELBOW MALE COUPLING 90° NPT
接头体：美制 JIC 外螺纹 74° 外锥 / NPTF 外螺纹直角通

Ø 钢管外径 公制	Ø 钢管外径 英制	订货型号	Ø 螺纹	Ø R2 NPT	B	B2	CH	PN	
6	1/4	ST. 11.04.02	7/16	1/8	22.6	19.8	11 1)	350	
6	1/4	ST. 11.04.04	7/16	1/4	26.9	27.7	14	350	
6	1/4	ST. 11.04.06	7/16	3/8	28.5	29.7	19	350	
6	1/4	ST. 11.04.08	7/16	1/2	31	36.5	22	350	
8	5/16	ST. 11.05.02	1/2	1/8	24.1	19.8	13 2)	350	
8	5/16	ST. 11.05.04	1/2	1/4	26.9	27.7	14	350	
10	3/8	ST. 11.06.02	9/16	1/8	26.9	22.8	14	350	
10	3/8	ST. 11.06.04	9/16	1/4	26.9	27.7	14	350	
10	3/8	ST. 11.06.06	9/16	3/8	29	31	19	350	
10	3/8	ST. 11.06.08	9/16	1/2	31.2	37.3	22	350	
12	1/2	ST. 11.08.04	3/4	1/4	31.8	31	19	350	
12	1/2	ST. 11.08.06	3/4	3/8	31.8	31	19	350	
12	1/2	ST. 11.08.08	3/4	1/2	33.7	37.3	22	350	
12	1/2	ST. 11.08.12	3/4	3/4	36	40.4	27	350	
14	-	ST. 11.10.06	7/8	3/8	36.8	33	22	350	
15	-	ST. 11.10.06	7/8	3/8	36.8	33	22	350	
16	5/8	ST. 11.10.06	7/8	3/8	36.8	37.3	22	350	
14	-	ST. 11.10.08	7/8	1/2	36.8	37.3	22	350	
15	-	ST. 11.10.08	7/8	1/2	36.8	37.3	22	350	
16	5/8	ST. 11.10.08	7/8	1/2	36.8	37.3	22	350	
14	-	ST. 11.10.12	7/8	3/4	38.9	40.4	27	350	
15	-	ST. 11.10.12	7/8	3/4	38.9	40.4	27	350	
16	5/8	ST. 11.10.12	7/8	3/4	42.2	40.4	27	350	
18	-	ST. 11.12.08	1" 1/16	1/2	42.2	40.4	27	350	
20	3/4	ST. 11.12.08	1" 1/16	1/2	42.2	40.4	27	350	
18	-	ST. 11.12.12	1" 1/16	3/4	42.2	40.4	27	350	
20	3/4	ST. 11.12.12	1" 1/16	3/4	42.2	40.4	27	350	
18	-	ST. 11.12.16	1" 1/16	1"	44.7	50	33	280	
20	3/4	ST. 11.12.16	1" 1/16	1"	44.7	50	33	280	
25	1"	ST. 11.16.12	1" 5/16	3/4	46	45.2	33	280	
25	1"	ST. 11.16.16	1" 5/16	1"	46	50	33	280	
25	1"	ST. 11.16.20	1" 5/16	1" 1/4	54	59.6	41	280	
30	-	ST. 11.20.16	1" 5/8	1"	52.3	59.6	41	210	
32	1" 1/4	ST. 11.20.16	1" 5/8	1"	52.3	59.6	41	210	
30	-	ST. 11.20.20	1" 5/8	1" 1/4	52.3	59;6	41	210	
32	1" 1/4	ST. 11.20.20	1" 5/8	1" 1/4	52.3	59.6	41	210	
30	-	ST. 11.20.24	1" 5/8	1" 1/2	56	67.1	48	140	
32	1" 1/4	ST. 11.20.24	1" 5/8	1" 1/2	56	67.1	48	140	
38	1" 1/2	ST. 11.24.20	1" 7/8	1" 1/4	59.2	57	48	140	
38	1" 1/2	ST. 11.24.24	1" 7/8	1" 1/2	59.2	67.1	48	140	

1) – 2) AISI 316L CH = 14 B = 26.9

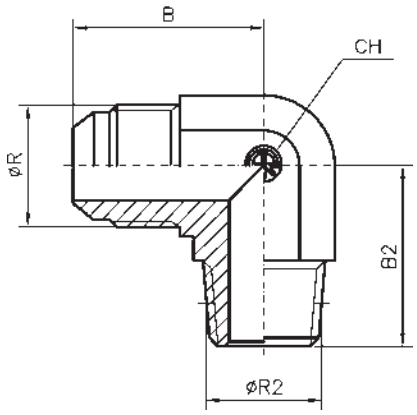

BODY: ELBOW MALE COUPLING 90°
BSPT (BSP TAPERED)

接头体：美制 JIC 外螺纹 74° 外锥 /
BSPT 外螺纹直角通（BSP 锥螺纹）

Ø 钢管外径		订货型号	Ø 螺纹	Ø R2 BSPT	B	B2	CH	PN	
公制	英制								
6	1/4	ST. 12.04.02	7/16	1/8	22.6	19.8	11 1)	350	
6	1/4	ST. 12.04.04	7/16	1/4	26.9	27.7	14	350	
8	5/16	ST. 12.05.02	1/2	1/8	24.1	19.8	13 2)	350	
8	5/16	ST. 12.05.04	1/2	1/4	26.9	27.7	14	350	
10	3/8	ST. 12.06.02	9/16	1/8	26.9	22.8	14	350	
10	3/8	ST. 12.06.04	9/16	1/4	26.9	27.7	14	350	
10	3/8	ST. 12.06.06	9/16	3/8	29	31	19	350	
10	3/8	ST. 12.06.08	9/16	1/2	31.2	37.3	22	350	
12	1/2	ST. 12.08.04	3/4	1/4	31.8	31	19	350	
12	1/2	ST. 12.08.06	3/4	3/8	31.8	31	19	350	
12	1/2	ST. 12.08.08	3/4	1/2	33.7	37.3	22	350	
12	1/2	ST. 12.08.12	3/4	3/4	36	40.4	27	350	
14	-	ST. 12.10.06	7/8	3/8	36.8	33	22	350	
15	-	ST. 12.10.06	7/8	3/8	36.8	33	22	350	
16	5/8	ST. 12.10.06	7/8	3/8	36.8	33	22	350	
14	-	ST. 12.10.08	7/8	1/2	36.8	37.3	22	350	
15	-	ST. 12.10.08	7/8	1/2	36.8	37.3	22	350	
16	5/8	ST. 12.10.08	7/8	1/2	36.8	37.3	22	350	
14	-	ST. 12.10.12	7/8	3/4	38.9	40.4	27	350	
15	-	ST. 12.10.12	7/8	3/4	38.9	40.4	27	350	
16	5/8	ST. 12.10.12	7/8	3/4	38.9	40.4	27	350	
18	-	ST. 12.12.08	1" 1/16	1/2	42.2	40.4	27	350	
20	3/4	ST. 12.12.08	1" 1/16	1/2	42.2	40.4	27	350	
18	-	ST. 12.12.12	1" 1/16	3/4	42.2	40.4	27	350	
20	3/4	ST. 12.12.12	1" 1/16	3/4	42.2	40.4	27	350	
18	-	ST. 12.12.16	1" 1/16	1"	44.7	50	33	280	
20	3/4	ST. 12.12.16	1" 1/16	1"	44.7	50	33	280	
25	1"	ST. 12.16.12	1" 5/16	3/4	46	45.2	33	280	
25	1"	ST. 12.16.16	1" 5/16	1"	46	50	33	280	
30	-	ST. 12.20.16	1" 5/8	1"	52.3	59.6	41	210	
32	1" 1/4	ST. 12.20.16	1" 5/8	1"	52.3	59.6	41	210	
30	-	ST. 12.20.20	1" 5/8	1" 1/4	52.3	59.6	41	210	
32	1" 1/4	ST. 12.20.20	1" 5/8	1" 1/4	52.3	59.6	41	210	
38	1" 1/2	ST. 12.24.24	1" 7/8	1" 1/2	59.2	67.1	48	140	

1) – 2) AISI 316L CH = 14 B = 26.9

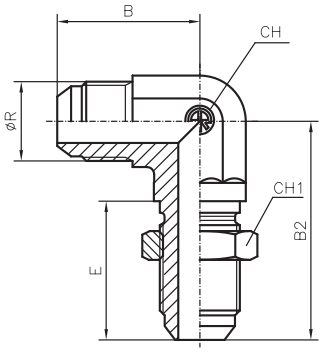

BODY: BULKHEAD ELBOW 90°
接头体：美制 JIC 外螺纹 74° 外锥过壁直角通

MAXIMUM BULKHEAD THICKNESS = 5 mm.
过壁螺母最大厚度 = 5mm

Ø 钢管外径		订货型号	Ø 螺纹	B	B2	CH	CH1	E	PN
公制	英制								
6	1/4	ST. 13.00.04	7/16	26.9	40.4	14	17	28.3	350
8	5/16	ST. 13.00.05	1/2	27	43.7	14	19	28.3	350
10	3/8	ST. 13.00.06	9/16	27.7	46	14	22	30.1	350
12	1/2	ST. 13.00.08	3/4	34.5	53.6	19	24	35	350
14	-	ST. 13.00.10	7/8	39.6	60.7	22	30	38.5	350
15	-	ST. 13.00.10	7/8	39.6	60.7	22	30	38.5	350
16	5/8	ST. 13.00.10	7/8	39.6	60.7	22	30	38.5	350
18	-	ST. 13.00.12	1" 1/16	45.2	67.8	27	36	42.8	350
20	3/4	ST. 13.00.12	1" 1/16	45.2	67.8	27	36	42.8	350
25	1"	ST. 13.00.16	1" 5/16	49.3	71.1	33	41	42.8	280
30-32	1" 1/4	ST. 13.00.20	1" 5/8	55.1	79.2	41	50	44.1	210
38	1" 1/2	ST. 13.00.24	1" 7/8	59.4	86.9	48	55	44.3	140

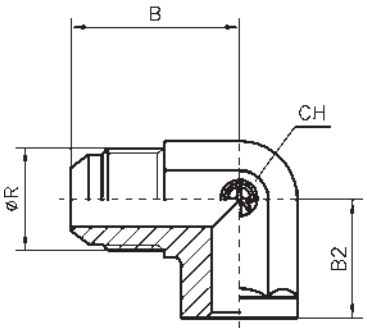

BODY: WELDING ELBOW 90°
接头体：美制 JIC 外螺纹 74° 外锥焊接直角通

Ø 钢管外径		订货型号	Ø 螺纹	B	B2	CH	PN	
公制	英制							
6	1/4	ST. 15.00.04	7/16	22.6	20	13/14 1)	350	
8	5/16	ST. 15.00.05	1/2	24.1	20	13 1)	350	
10	3/8	ST. 15.00.06	9/16	26.9	22	14	350	
12	1/2	ST. 15.00.08	3/4	31.8	22	19	350	
14	-	ST. 15.00.10	7/8	36.8	26	22	350	
15	-	ST. 15.00.10	7/8	36.8	26	22	350	
16	5/8	ST. 15.00.10	7/8	36.8	26	22	350	
18-20	3/4	ST. 15.00.12	1" 1/16	42.2	30	27	350	
25	1	ST. 15.00.16	1" 5/16	46	36	33	280	
30-32	1" 1/4	ST. 15.00.20	1" 5/8	52.3	38	41	210	
38	1" 1/2	ST. 15.00.24	1" 7/8	59.2	45	48	140	

1) AISI 316L CH = 14 B = 26.9

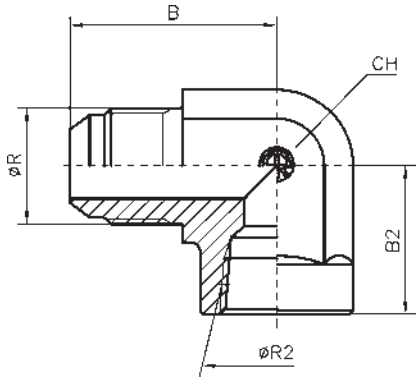

BODY: ELBOW 90° FEMALE NPT
接头体：美制 JIC 外螺纹 74° 外锥 / NPT 内螺纹直角通

Ø 钢管外径		订货型号	Ø 螺纹	Ø R2 NPT	B	B2	CH	PN	
公制	英制								
6	1/4	ST. 17.04.02	7/16	1/8	27.4	16.8	14	350	
6	1/4	ST. 17.04.04	7/16	1/4	31	22.4	19	350	
8	5/16	ST. 17.05.02	1/2	1/8	27.4	16.8	14	350	
8	5/16	ST. 17.05.04	1/2	1/4	28.7	22.4	19	350	
10	3/8	ST. 17.06.02	9/16	1/8	31.2	17	14	350	
10	3/8	ST. 17.06.04	9/16	1/4	31.2	22.4	19	350	
10	3/8	ST. 17.06.06	9/16	3/8	33.3	25.9	22	350	
12	1/2	ST. 17.08.04	3/4	1/4	36.1	25.9	19	350	
12	1/2	ST. 17.08.06	3/4	3/8	36.1	25.9	22	350	
12	1/2	ST. 17.08.08	3/4	1/2	38.7	31.2	27	350	
14-15-16	5/8	ST. 17.10.08	7/8	1/2	41.7	31.2	27	350	
18-20	3/4	ST. 17.12.08	1" 1/16	1/2	48	34.5	27	250	
18-20	3/4	ST. 17.12.12	1" 1/16	3/4	48	34.5	33	350	
25	1"	ST. 17.16.16	1" 5/16	1"	55.1	41.4	41	250	
30-32	1" 1/4	ST. 17.20.20	1" 5/8	1" 1/4	59.2	43.2	48	210	

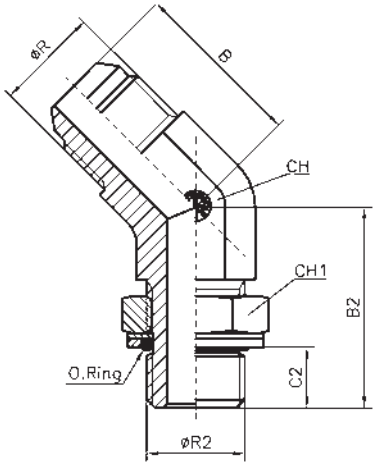

BODY: ELBOW MALE COUPLING 45° BSPP (BSP PARALLEL)

接头体：美制 JIC 外螺纹 74° 外锥 / BSPP 内螺纹可调式 45° 角通

Ø 钢管外径		订货型号	Ø 螺纹	Ø R2 BSPP	B	B2	C2	CH	CH1	PN
公制	英制									
6	1/4	ST. 35.04.02	7/16	1/8	18.2 2)	27	6.3	11 1)	14	350
6	1/4	ST. 35.04.04	7/16	1/4	21.1 2)	29	9.5	14 1)	19	350
6	1/4	ST. 35.04.06	7/16	3/8	22.3	33	9.5	19	22	350
6	1/4	ST. 35.04.08	7/16	1/2	22.8	38.5	13	22	27	350
8	5/16	ST. 35.05.02	1/2	1/8	20.2 2)	27	6.3	14 1)	14	350
8	5/16	ST. 35.05.04	1/2	1/4	21.1 2)	29	9.5	14 1)	19	350
8	5/16	ST. 35.05.06	1/2	3/8	22.3	33	9.5	19	22	350
10	3/8	ST. 35.06.04	9/16	1/4	21.1 2)	29	9.5	14 1)	19	350
10	3/8	ST. 35.06.06	9/16	3/8	22.3	33	9.5	19	22	350
10	3/8	ST. 35.06.08	9/16	1/2	22.8	38.5	13	22	27	350
12	1/2	ST. 35.08.04	3/4	1/4	24.9	30	9.5	19	19	350
12	1/2	ST. 35.08.06	3/4	3/8	24.9	33	9.5	19	22	350
12	1/2	ST. 35.08.08	3/4	1/2	26.7	38.5	13	22	27	350
12	1/2	ST. 35.08.12	3/4	3/4	26.7	44	13	27	36	350
14-15-16	5/8	ST. 35.10.06	7/8	3/8	28.2	38.5	9.5	22	22	350
14-15-16	5/8	ST. 35.10.08	7/8	1/2	28.2	38.5	13	22	27	350
14-15-16	5/8	ST. 35.10.12	7/8	3/4	29.8	44	13	27	36	250
18-20	3/4	ST. 35.12.08	1" 1/16	1/2	32.5	39.9	13	27	27	250
18-20	3/4	ST. 35.12.12	1" 1/16	3/4	32.5	44	13	27	36	250
18-20	3/4	ST. 35.12.16	1" 1/16	1"	36	47.5	16	33	41	250
25	1"	ST. 35.16.12	1" 5/16	3/4	37.3	47.5	13	33	36	250
25	1"	ST. 35.16.16	1" 5/16	1"	37.3	47.5	16	33	41	250
25	1"	ST. 35.16.20	1" 5/16	1" 1/4	37.3	47.5	16	33	50	250
30-32	1" 1/4	ST. 35.20.16	1" 5/8	1"	40.4	48.5	16	41	41	175
30-32	1" 1/4	ST. 35.20.20	1" 5/8	1" 1/4	40.4	48.5	16	41	50	175
38	1" 1/2	ST. 35.24.20	1" 7/8	1" 1/4	45.2	48.5	16	48	50	140
38	1" 1/2	ST. 35.24.24	1" 7/8	1" 1/2	45.2	48.5	16	48	55	140

1) AISI 316L CH = 19
2) AISI 316L B = 23.5

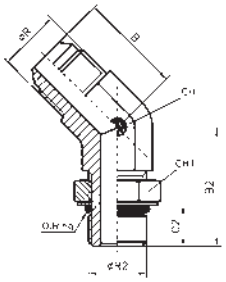

BODY: ELBOW MALE COUPLING 45° UNF 2A
接头体：美制 JIC 外螺纹 74° 外锥 / UNF 外螺纹 45° 可调式角通

Ø 钢管外径		订货型号	Ø 螺纹	Ø R2 UNF	B	B2	C2	CH	CH1	PN
公制	英制									
6	1/4	ST. 36.04.04	7/16	7/16	18.3 2)	26.7	9	11 1)	14	350
6	1/4	ST. 36.04.05	7/16	1/2	19.6 2)	26.7	9	14 1)	16	350
8	5/16	ST. 36.05.05	1/2	1/2	19.6 2)	26.7	9	14 1)	16	350
10	3/8	ST. 36.06.06	9/16	9/16	21.1 2)	29	10	14 1)	17	350
10	3/8	ST. 36.06.08	9/16	3/4	22.3	33	11	19	22	350
12	1/2	ST. 36.08.08	3/4	3/4	24.9	33	11	19	22	350
12	1/2	ST. 36.08.10	3/4	7/8	24.9	38.6	12.5	22	27	350
14-15-16	5/8	ST. 36.10.08	7/8	3/4	28.2	34.5	11	22	22	350
14-15-16	5/8	ST. 36.10.10	7/8	7/8	28.2	38.6	12.5	22	27	350
18-20	3/4	ST. 36.12.08	1" 1/16	3/4	32.5	35.8	11	27	22	350
18-20	3/4	ST. 36.12.10	1" 1/16	7/8	32.5	39.8	12.5	27	27	350
18-20	3/4	ST. 36.12.12	1" 1/16	1" 1/16	32.5	43.9	15	27	32	350
18-20	3/4	ST. 36.12.16	1" 1/16	1" 5/16	36.1	47.2	15	33	38	350
25	1"	ST. 36.16.12	1" 5/16	1" 1/16	37.3	43.9	15	33	32	350
25	1"	ST. 36.16.16	1" 5/16	1" 5/16	37.3	47.2	15	33	38	350
25	1"	ST. 36.16.20	1" 5/16	1" 5/8	39.2	48.5	15	41	50	210
30-32	1" 1/4	ST. 36.20.20	1" 5/8	1" 5/8	40.4	48.5	15	41	50	210
38	1" 1/2	ST. 36.24.24	1" 7/8	1" 7/8	45.2	48.5	15	48	55	140

1) AISI 316L CH = 19
2) AISI 316L B = 23.5

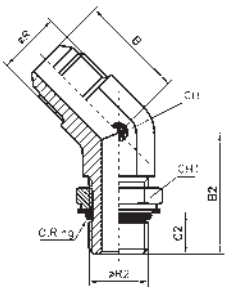

BODY: ELBOW MALE COUPLING 45° METRIC - ISO 6149-3
接头体：美制 JIC 外螺纹 74° 外锥 / 公制轻型 ISO 6149-3 45° 可调式角通

Ø 钢管外径		订货型号	Ø 螺纹	Ø R2 公制螺纹	B	B2	C2	CH	CH1	PN
公制	英制									
8	5/16	ST. 37.05.02	1/2	10 × 1	21.1 2)	29	8.5	14 1)	14	350
10	3/8	ST. 37.06.04	9/16	14 × 1.5	21.1 2)	29	11	14 1)	19	350
10	3/8	ST. 37.06.06	9/16	18 × 1.5	22.3	33	12.5	19	24	350
12	1/2	ST. 37.08.05	3/4	16 × 1.5	24.9	32	11.5	19	22	350
12	1/2	ST. 37.08.06	3/4	18 × 1.5	24.9	36.5	12.5	19	24	350
14-15-16	5/8	ST. 37.10.06	7/8	18 × 1.5	28.2	37	12.5	22	24	350
14-15-16	5/8	ST. 37.10.08	7/8	22 × 1.5	28.2	37.5	12.5	22	27	350
18-20	3/4	ST. 37.12.08	1" 1/16	22 × 1.5	32.5	39	12.5	27	27	350
18-20	3/4	ST. 37.12.14	1" 1/16	27 × 2	32.5	46	15.5	27	32	350
25	1"	ST. 37.16.16	1" 5/16	33 × 2	37.3	45.5	15.5	33	41	280

1) AISI 316L CH = 19
2) AISI 316L B = 23.5

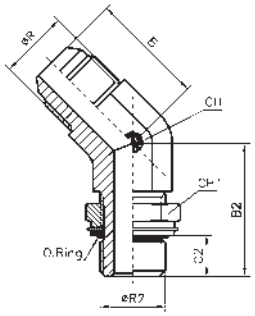

BODY: ELBOW MALE COUPLING 45° METRIC-O-RING SEAL RING

接头体：美制 JIC 外螺纹 74° 外锥 / 公制带 O 型圈密封可调式角通

Ø 钢管外径		订货型号	Ø 螺纹	Ø R2 公制螺纹	B	B2	C2	CH	CH1	PN
公制	英制									
8	5/16	ST. 37.05.02 W	1/2	10x1	21.1 2)	29	7.5	14 1)	14	350
10	3/8	ST. 37.06.04 W	9/16	14x1.5	21.1 2)	29	9.5	14 1)	19	350
10	3/8	ST. 37.06.06 W	9/16	18x1.5	22.3	33	11	19	24	350
12	1/2	ST. 37.08.05 W	3/4	16x1.5	24.9	32	10	19	22	350
12	1/2	ST. 37.08.06 W	3/4	18x1.5	24.9	36.5	11	19	24	350
14	-	ST. 37.10.06 W	7/8	18x1.5	28.2	37	11	22	24	350
15	-	ST. 37.10.06 W	7/8	18x1.5	28.2	37	11	22	24	350
16	5/8	ST. 37.10.06 W	7/8	18x1.5	28.2	37	11	22	24	350
14	-	ST. 37.10.08 W	7/8	22x1.5	28.2	37.5	11	22	27	350
15	-	ST. 37.10.08 W	7/8	22x1.5	28.2	37.5	11	22	27	350
16	5/8	ST. 37.10.08 W	7/8	22x1.5	28.2	37.5	11	22	27	350
18	-	ST. 37.12.08 W	1" 1/16	22x1.5	32.5	39	11	27	27	350
20	3/4	ST. 37.12.08 W	1" 1/16	22x1.5	32.5	39	11	27	27	350
18	-	ST. 37.12.14 W	1" 1/16	27x2	32.5	46	13.5	27	32	350
20	3/4	ST. 37.12.14 W	1" 1/16	27x2	32.5	46	13.5	27	32	350
25	1"	ST. 37.16.16 W	1" 5/16	33x2	37.3	45.5	13.5	33	41	250

1) AISI 316L CH = 19
2) AISI 316L B = 23.5

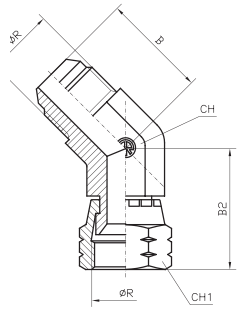

BODY: ELBOW COUPLING 45° WITH ROTARY NUT JIC

接头体：美制 JIC 外螺纹 74° 外锥 / 美制 JIC 内螺纹 74° 内锥 45 ° 角通

Ø 钢管外径		订货型号	Ø 螺纹	B	B2	CH	CH1	PN	
公制	英制								
6	1/4	ST. 39.00.04	7/16	18.3 2)	24	11 1)	17	350	
8	5/16	ST. 39.00.05	1/2	19.6 2)	25.4	14 1)	19	350	
10	3/8	ST. 39.00.06	9/16	21.1 2)	27.5	14 1)	19	350	
12	1/2	ST. 39.00.08	3/4	24.9	32.2	19	24	350	
14	-	ST. 39.00.10	7/8	28.2	34.7	22	27	350	
15	-	ST. 39.00.10	7/8	28.2	34.7	22	27	350	
16	5/8	ST. 39.00.10	7/8	28.2	34.7	22	27	350	
18	-	ST. 39.00.12	1" 1/16	32.5	38.1	27	32	350	
20	3/4	ST. 39.00.12	1" 1/16	32.5	38.1	27	32	350	
25	1"	ST. 39.00.16	1" 5/16	37.3	43.6	33	38	350	
30	-	ST. 39.00.20	1" 5/8	40.5	51.6	41	50	210	
32	1" 1/4	ST. 39.00.20	1" 5/8	40.5	51.6	41	50	210	
38	1" 1/2	ST. 39.00.24	1" 7/8	45.2	57.2	48	60	140	

1) AISI 316L CH = 19
2) AISI 316L B = 23.5

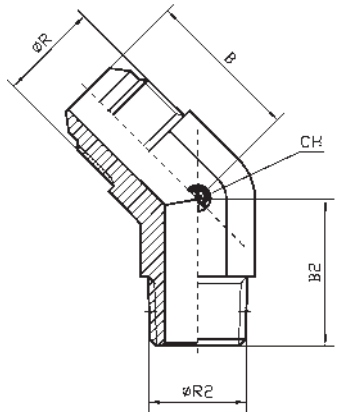

BODY:ELBOW MALE COUPLING 45° NPT

接头体：美制 JIC 外螺纹 74° 外锥 /NPT 外螺纹 45° 角通

Ø 钢管外径		订货型号	Ø 螺纹	Ø R2 NPT	B	B2	CH	PN	
公制	英制								
6	1/4	ST. 41.04.04	7/16	1/4	20.8 2)	21.8	14 1)	350	
8	5/16	ST. 41.05.04	1/2	1/4	20.8 2)	21.8	14 1)	350	
10	3/8	ST. 41.06.02	9/16	1/8	21.1 2)	17	14 1)	350	
10	3/8	ST. 41.06.04	9/16	1/4	21.1 2)	21.8	14 1)	350	
10	3/8	ST. 41.06.06	9/16	3/8	22.1	24.1	19	350	
10	3/8	ST. 41.06.08	9/16	1/2	22.4	29.7	22	350	
12	1/2	ST. 41.08.04	3/4	1/4	24.9	24	19	350	
12	1/2	ST. 41.08.06	3/4	3/8	24.9	24.1	19	350	
12	1/2	ST. 41.08.08	3/4	1/2	25.2	29.7	22	350	
12	1/2	ST. 41.08.12	3/4	3/4	26.5	30.5	27	350	
14	-	ST. 41.10.06	7/8	3/8	28.2	25	22	350	
15	-	ST. 41.10.06	7/8	3/8	28.2	25	22	350	
16	5/8	ST. 41.10.06	7/8	3/8	28.2	25	22	350	
14	-	ST. 41.10.08	7/8	1/2	28.2	29.7	22	350	
15	-	ST. 41.10.08	7/8	1/2	28.2	29.7	22	250	
16	5/8	ST. 41.10.08	7/8	1/2	28.2	29.7	22	350	
14	-	ST. 41.10.12	7/8	3/4	29.5	30.5	27	350	
15	-	ST. 41.10.12	7/8	3/4	29.5	30.5	27	350	
16	5/8	ST. 41.10.12	7/8	3/4	29.5	30.5	27	350	
18	-	ST. 41.12.08	1" 1/16	1/2	32.5	30.5	27	350	
20	3/4	ST. 41.12.08	1" 1/16	1/2	32.5	30.5	27	350	
18	-	ST. 41.12.12	1" 1/16	3/4	32.5	30.5	27	350	
20	3/4	ST. 41.12.12	1" 1/16	3/4	32.5	30.5	27	350	
25	1"	ST. 41.16.12	1" 5/16	3/4	37.3	32.5	33	280	
25	1"	ST. 41.16.16	1" 5/16	1"	37.3	37.6	33	280	
30	-	ST. 41.20.16	1" 5/8	1"	40.4	42.4	41	210	
32	1" 1/4	ST. 41.20.16	1" 5/8	1"	40.4	42.4	41	210	
30	-	ST. 41.20.20	1" 5/8	1" 1/4	40.4	42.4	41	210	
32	1" 1/4	ST. 41.20.20	1" 5/8	1" 1/4	40.4	42.4	41	210	
38	1" 1/2	ST. 41.24.24	1" 7/8	1" 1/2	45.2	45	48	140	

1) AISI 316L CH = 19
2) AISI 316L B = 23.5

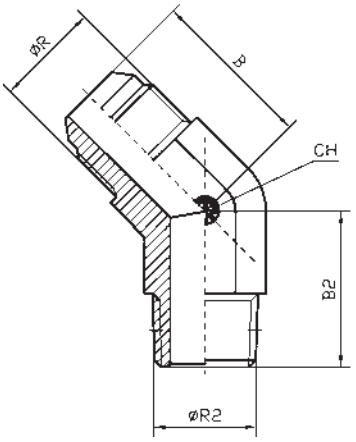

BODY: ELBOW MALE COUPLING 45° BSPT (BSP TAPERED)

接头体：美制 JIC 外螺纹 74° 外锥 / BSPT 外螺纹 45° 角通

Ø 钢管外径		订货型号	Ø 螺纹	Ø R2 BSPT	B	B2	CH	PN	
公制	英制								
6	1/4	ST. 42.04.04	7/16	1/4	20.8 2)	21.8	14 1)	350	
8	5/16	ST. 42.05.04	1/2	1/4	20.8 2)	21.8	14 1)	350	
10	3/8	ST. 42.06.04	9/16	1/4	21.1 2)	21.8	14 1)	350	
10	3/8	ST. 42.06.06	9/16	3/8	22.1	24.1	19	350	
10	3/8	ST. 42.06.08	9/16	1/2	22.4	29.7	22	350	
12	1/2	ST. 42.08.06	3/4	3/8	24.9	24.1	19	350	
12	1/2	ST. 42.08.08	3/4	1/2	25.2	29.7	22	350	
14	-	ST. 42.10.08	7/8	1/2	28.2	29.7	22	350	
15	-	ST. 42.10.08	7/8	1/2	28.2	29.7	22	350	
16	5/8	ST. 42.10.08	7/8	1/2	28.2	29.7	22	350	
18	-	ST. 42.12.12	1" 1/16	3/4	32.5	30.5	27	350	
20	3/4	ST. 42.12.12	1" 1/16	3/4	32.5	30.5	27	350	
25	1"	ST. 42.16.16	1" 5/16	1"	37.3	37.6	33	280	
30	-	ST. 42.20.20	1" 5/8	1" 1/4	40.4	42.4	41	210	
32	1" 1/4	ST. 42.20.20	1" 5/8	1" 1/4	40.4	42.4	41	210	
38	1" 1/2	ST. 42.24.24	1" 7/8	1" 1/2	45.2	45	48	140	

1) AISI 316L CH = 19
2) AISI 316L B = 23.5

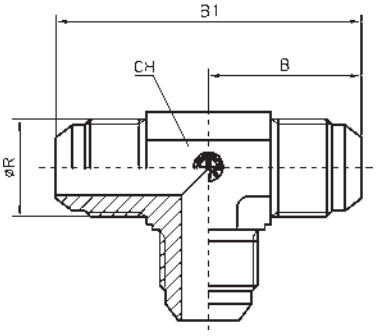

BODY: EQUAL TEES
接头体：美制 JIC 外螺纹 74° 外锥 / 三通

Ø 钢管外径		订货型号	Ø 螺纹	B	B1	CH	PN	
公制	英制							
6	1/4	ST. 51.00.04	7/16	22.6	45.2	11 1)	350	
8	5/16	ST. 51.00.05	1/2	24.1	48.2	13 2)	350	
10	3/8	ST. 51.00.06	9/16	26.9	53.8	14	350	
12	1/2	ST. 51.00.08	3/4	31.8	63.6	19	350	
14	-	ST. 51.00.10	7/8	36.8	73.6	22	350	
15	-	ST. 51.00.10	7/8	36.8	73.6	22	350	
16	5/8	ST. 51.00.10	7/8	36.8	73.6	22	350	
18	-	ST. 51.00.12	1" 1/16	42.2	84.4	27	350	
20	3/4	ST. 51.00.12	1" 1/16	42.2	84.4	27	350	
25	1"	ST. 51.00.16	1" 5/16	46	92	33	280	
30	-	ST. 51.00.20	1" 5/8	52.3	104.6	41	210	
32	1" 1/4	ST. 51.00.20	1" 5/8	52.3	104.6	41	210	
38	1" 1/2	ST. 51.00.24	1" 7/8	59.2	118.4	48	140	

1) – 2) AISI 316L CH = 14 B = 26.9 B1 = 53.8

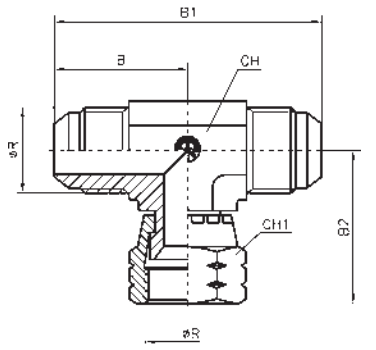

BODY: "T" OF LINE
WITH ROTARY NUT JIC
接头体：美制 JIC 外螺纹 74° 外锥 / 美制 JIC 内螺纹
74° 外锥 / 美制 JIC 外螺纹 74° 外锥三通

Ø 钢管外径		订货型号	Ø 螺纹	B	B1	B2	CH	CH1	PN
公制	英制								
6	1/4	ST. 55.00.04	7/16	22.6	45.2	25.7	11 1)	17	350
8	5/16	ST. 55.00.05	1/2	24.1	48.2	29.5	13 2)	19	350
10	3/8	ST. 55.00.06	9/16	26.9	53.8	32.5	14	19	350
12	1/2	ST. 55.00.08	3/4	31.8	63.6	37.7	19	24	350
14	-	ST. 55.00.10	7/8	36.8	73.6	41.2	22	27	350
15	-	ST. 55.00.10	7/8	36.8	73.6	41.2	22	27	350
16	5/8	ST. 55.00.10	7/8	36.8	73.6	41.2	22	27	350
18	-	ST. 55.00.12	1" 1/16	42.2	84.4	47.3	27	32	350
20	3/4	ST. 55.00.12	1" 1/16	42.2	84.4	47.3	27	32	350
25	1"	ST. 55.00.16	1" 5/16	46	92	51.6	33	38	280
30	-	ST. 55.00.20	1" 5/8	52.3	104.6	59.9	41	50	210
32	1" 1/4	ST. 55.00.20	1" 5/8	52.3	104.6	59.9	41	50	210
38	1" 1/2	ST. 55.00.24	1" 7/8	59.2	118.4	65.8	48	60	140

1) – 2) AISI 316L CH = 14 B = 26.9 B1 = 53.8 B2 = 28.5/30

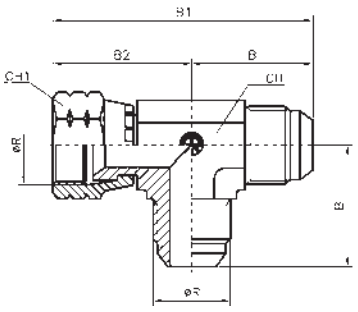

BODY: DERIVATING "T" WITH ROTARY NUT JIC

接头体：美制 JIC 内螺纹 74° 内锥 / 美制 JIC 外螺纹 74° 外锥 / 美制 JIC 外螺纹 74° 外锥三通

Ø 钢管外径		订货型号	Ø 螺纹	B	B1	B2	CH	CH1	PN
公制	英制								
6	1/4	ST. 59.00.04	7/16	22.6	48.3	25.7	11 1)	17	350
8	5/16	ST. 59.00.05	1/2	24.1	53.6	29.5	13 2)	19	350
10	3/8	ST. 59.00.06	9/16	26.9	59.4	32.5	14	19	350
12	1/2	ST. 59.00.08	3/4	31.8	69.5	37.7	19	24	350
14	-	ST. 59.00.10	7/8	36.8	78	41.2	22	27	350
15	-	ST. 59.00.10	7/8	36.8	78	41.2	22	27	350
16	5/8	ST. 59.00.10	7/8	36.8	78	41.2	22	27	350
18	-	ST. 59.00.12	1" 1/16	42.2	89.5	47.3	27	32	350
20	3/4	ST. 59.00.12	1" 1/16	42.2	89.5	47.3	27	32	350
25	1"	ST. 59.00.16	1" 5/16	46	97.6	51.6	33	38	280
30	-	ST. 59.00.20	1" 5/8	52.3	112.2	59.9	41	50	210
32	1" 1/4	ST. 59.00.20	1" 5/8	52.3	112.2	59.9	41	50	210
38	1" 1/2	ST. 59.00.24	1" 7/8	59.2	125	65.8	48	60	140

1) – 2) AISI 316L CH = 14 B = 26.9 B1 = 53.8 B2 = 28.5/30

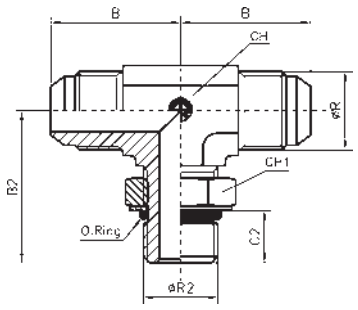

BODY: "T" MALE LINE UNF 2A

接头体：美制 JIC 外螺纹 74° 外锥 / UNF 外螺纹可调式三通

Ø 钢管外径		订货型号	Ø 螺纹	Ø R2 UNF	B	B2	C2	CH	CH1	PN
公制	英制									
6	1/4	ST. 60.04.04	7/16	7/16	22.6	26.2	9	11 1)	14	350
8	5/16	ST. 60.05.05	1/2	1/2	24.1	27.7	9	13 2)	16 3)	350
10	3/8	ST. 60.06.06	9/16	9/16	26.9	31.8	10	14	17	350
12	1/2	ST. 60.08.08	3/4	3/4	31.8	36.8	11	19	22	350
14	-	ST. 60.10.10	7/8	7/8	36.8	43.2	12.7	22	27	350
15	-	ST. 60.10.10	7/8	7/8	36.8	43.2	12.7	22	27	350
16	5/8	ST. 60.10.10	7/8	7/8	36.8	43.2	12.7	22	27	350
18	-	ST. 60.12.12	1" 1/16	1" 1/16	42.2	49.3	15	27	32	350
20	3/4	ST. 60.12.12	1" 1/16	1" 1/16	42.2	49.3	15	27	32	350
25	1"	ST. 60.16.16	1" 5/16	1" 5/16	46	52.1	15	33	38	280
30	-	ST. 60.20.20	1" 5/8	1" 5/8	52.3	57.2	15	41	50	210
32	1" 1/4	ST. 60.20.20	1" 5/8	1" 5/8	52.3	57.2	15	41	50	210
38	1" 1/2	ST. 60.24.24	1" 7/8	1" 7/8	59.2	60.7	15	48	55	140

1) – 2) AISI 316 L CH = 14 B = 26.9 B = 26.9 B2 = 30.8
3) AISI 316 L CH1 = 17

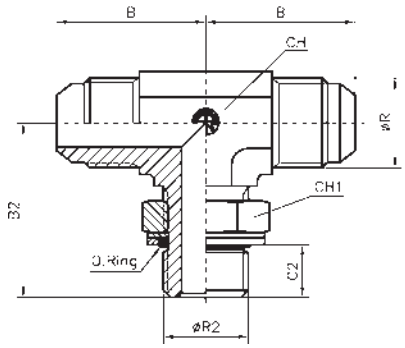

BODY: "T" MALE LINE BSPP (BSP PARALLEL)

接头体：美制 JIC 外螺纹 74° 外锥 /BSPP 外螺纹可调式三通

Ø 钢管外径		订货型号	Ø 螺纹	Ø R2 BSPP	B	B2	C2	CH	CH1	PN
公制	英制									
6	1/4	ST. 61.04.02	7/16	1/8	22.6	26	6.3	11 1)	14	350
6	1/4	ST. 61.04.04	7/16	1/4	26.7	31.8	9.5	14	19	350
6	1/4	ST. 61.04.06	7/16	3/8	28.5	37	9.5	19	22	350
6	1/4	ST. 61.04.08	7/16	1/2	30.7	43	13	22	27	350
8	5/16	ST. 61.05.02	1/2	1/8	24.1	26	6.3	13 2)	14	350
8	5/16	ST. 61.05.04	1/2	1/4	26.7	31.8	9.5	14	19	350
8	5/16	ST. 61.05.06	1/2	3/8	28.7	36.8	9.5	19	22	350
10	3/8	ST. 61.06.04	9/16	1/4	26.9	32.5	9.5	14	19	350
10	3/8	ST. 61.06.06	9/16	3/8	29	37.5	9.5	19	22	350
10	3/8	ST. 61.06.08	9/16	1/2	31.1	43	13	22	27	350
12	1/2	ST. 61.08.04	3/4	1/4	31.8	33.5	9.5	19	19	350
12	1/2	ST. 61.08.06	3/4	3/8	31.8	37.5	9.5	19	22	350
12	1/2	ST. 61.08.08	3/4	1/2	33.7	43	13	22	27	350
12	1/2	ST. 61.08.12	3/4	3/4	36	49.5	13	27	36	350
14	-	ST. 61.10.06	7/8	3/8	36.8	39.1	9.5	22	22	350
15	-	ST. 61.10.06	7/8	3/8	36.8	39.1	9.5	22	22	350
16	5/8	ST. 61.10.06	7/8	3/8	36.8	39.1	9.5	22	22	350
14	-	ST. 61.10.08	7/8	1/2	36.8	43	13	22	27	350
15	-	ST. 61.10.08	7/8	1/2	36.8	43	13	22	27	350
16	5/8	ST. 61.10.08	7/8	1/2	36.8	43	13	22	27	350
14	-	ST. 61.10.12	7/8	3/4	38.9	49.5	13	27	36	350
15	-	ST. 61.10.12	7/8	3/4	38.9	49.5	13	27	36	350
16	5/8	ST. 61.10.12	7/8	3/4	38.9	49.5	13	27	36	350
18	-	ST. 61.12.08	1" 1/16	1/2	42.2	49.5	13	27	27	250
20	3/4	ST. 61.12.08	1" 1/16	1/2	42.2	49.5	13	27	27	250
18	-	ST. 61.12.12	1" 1/16	3/4	42.2	49.5	13	27	36	250
20	3/4	ST. 61.12.12	1" 1/16	3/4	42.2	49.5	13	27	36	250
18	-	ST. 61.12.16	1" 1/16	1"	44.8	52	16	33	41	250
20	3/4	ST. 61.12.16	1" 1/16	1"	44.8	52	16	33	41	250
25	1"	ST. 61.16.12	1" 5/16	3/4	46	52	13	33	36	250
25	1"	ST. 61.16.16	1" 5/16	1"	46	52	16	33	41	250
25	1"	ST. 61.16.20	1" 5/16	1" 1/4	51	57	16	41	50	250
30	-	ST. 61.20.16	1" 5/8	1"	52.3	57	16	41	41	175
32	1" 1/4	ST. 61.20.16	1" 5/8	1"	52.3	57	16	41	41	175
30	-	ST. 61.20.20	1" 5/8	1" 1/4	52.3	57	16	41	50	175
32	1" 1/4	ST. 61.20.20	1" 5/8	1" 1/4	52.3	57	16	41	50	175
38	1" 1/2	ST. 61.24.20	1" 7/8	1" 1/4	59.2	60.5	16	48	50	140
38	1" 1/2	ST. 61.24.24	1" 7/8	1" 1/2	59.2	60.5	16	48	55	140

1) - 2) AISI 316 L CH = 14 B = 26.9 B2 = 28.5

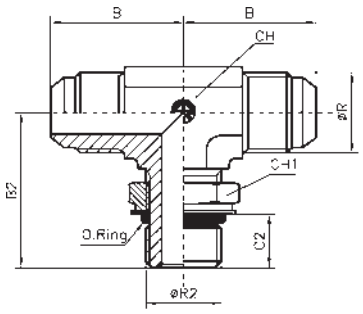

BODY: "T" MALE LINE METRIC - ISO 6149-3

接头体：美制 JIC 外螺纹 74° 外锥 / 公制外螺纹可调式轻型系列 ISO 6149-3 三通

Ø 钢管外径		订货型号	Ø 螺纹	Ø R2 公制螺纹	B	B2	C2	CH	CH1	PN
公制	英制									
6	1/4	ST. 62.04.02	7/16	10x1	22.6	27	8.5	11 1)	14	350
8	5/16	ST. 62.05.03	1/2	12x1.5	24.1	29	11	13 2)	17	350
10	3/8	ST. 62.06.04	9/16	14x1.5	26.9	34	11	14	19	350
12	1/2	ST. 62.08.05	3/4	16x1.5	31.8	36	11.5	19	22	350
12	1/2	ST. 62.08.06	3/4	18x1.5	31.8	38	12.5	19	24	350
14	-	ST. 62.10.06	7/8	18x1.5	36.8	41.5	12.5	22	24	350
15	-	ST. 62.10.06	7/8	18x1.5	36.8	41.5	12.5	22	24	350
16	5/8	ST. 62.10.06	7/8	18x1.5	36.8	41.5	12.5	22	24	350
14	-	ST. 62.10.08	7/8	22x1.5	36.8	42.5	12.5	22	27	350
15	-	ST. 62.10.08	7/8	22x1.5	36.8	42.5	12.5	22	27	350
16	5/8	ST. 62.10.08	7/8	22x1.5	36.8	42.5	12.5	22	27	350
18	-	ST. 62.12.08	1" 1/16	22x1.5	42.2	45	12.5	27	27	350
20	3/4	ST. 62.12.08	1" 1/16	22x1.5	42.2	45	12.5	27	27	350
18	-	ST. 62.12.14	1" 1/16	27x2	42.2	51	15.5	27	32	350
20	3/4	ST. 62.12.14	1" 1/16	27x2	42.2	51	15.5	27	32	350
25	1"	ST. 62.16.14	1" 5/16	27x2	46	53	15.5	33	32	280

1) – 2) AISI 316L CH = 14 B = 26.9 B2 = 31.5/34

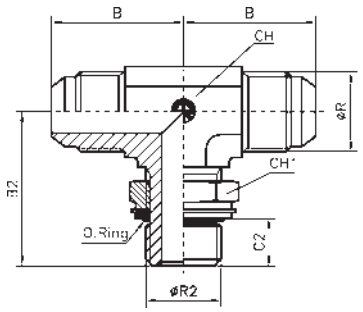

BODY: "T" MALE LINE METRIC - O-RING SEAL RING

接头体：美制 JIC 外螺纹 74° 外锥 / 公制外螺纹带 O 型圈可调式三通

Ø 钢管外径		订货型号	Ø 螺纹	Ø R2 公制螺纹	B	B2	C2	CH	CH1	PN
公制	英制									
6	1/4	ST. 62.04.02 W	7/16	10 × 1	22.6	27	7.5	11 1)	14	350
8	5/16	ST. 62.05.03 W	1/2	12 × 1.5	24.1	29	9.5	13 2)	17	350
10	3/8	ST. 62.06.04 W	9/16	14 × 1.5	26.9	34	9.5	14	19	350
12	1/2	ST. 62.08.05 W	3/4	16 × 1.5	31.8	36	10	19	22	350
12	1/2	ST. 62.08.06 W	3/4	18 × 1.5	31.8	38	11	19	24	350
14	-	ST. 62.10.06 W	7/8	18 × 1.5	36.8	41.5	11	22	24	350
15	-	ST. 62.10.06 W	7/8	18 × 1.5	36.8	41.5	11	22	24	350
16	5/8	ST. 62.10.06 W	7/8	18 × 1.5	36.8	41.5	11	22	24	350
14	-	ST. 62.10.08 W	7/8	22 × 1.5	36.8	42.5	11	22	27	350
15	-	ST. 62.10.08 W	7/8	22 × 1.5	36.8	42.5	11	22	27	350
16	5/8	ST. 62.10.08 W	7/8	22 × 1.5	36.8	42.5	11	22	27	350
18	-	ST. 62.12.08 W	1" 1/16	22 × 1.5	42.2	45	11	27	27	350
20	3/4	ST. 62.12.08 W	1" 1/16	22 × 1.5	42.2	45	11	27	27	350
18	-	ST. 62.12.14 W	1" 1/16	27 × 2	42.2	51	13.5	27	32	350
20	3/4	ST. 62.12.14 W	1" 1/16	27 × 2	42.2	51	13.5	27	32	350
25	1"	ST. 62.16.14 W	1" 5/16	27 × 2	46	53	13.5	33	32	250

1) – 2) AISI 316 L CH = 14 B = 26.9 B2 = 31.5/34

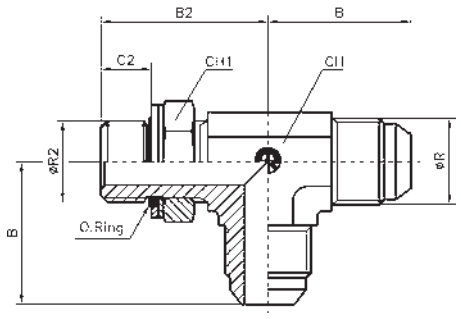

BODY: DERIVATING "T" BSPP (BSP PARALLEL)

接头体：美制 JIC 外螺纹 74° 外锥 /BSPP 外螺纹可调式三通

Ø 钢管外径		订货型号	Ø 螺纹	Ø R2 BSPP	B	B2	C2	CH	CH1	PN
公制	英制									
6	1/4	ST. 63.04.02	7/16	1/8	22.6	26	6.3	11 1)	14	350
6	1/4	ST. 63.04.04	7/16	1/4	26.7	31.8	9.5	14	19	350
6	1/4	ST. 63.04.06	7/16	3/8	28.5	37	9.5	19	22	350
6	1/4	ST. 63.04.08	7/16	1/2	26.9	43	13	22	27	350
8	5/16	ST. 63.05.02	1/2	1/8	24.1	26	6.3	13 2)	14	350
8	5/16	ST. 63.05.04	1/2	1/4	26.7	31.8	9.5	14	19	350
8	5/16	ST. 63.05.06	1/2	3/8	28.7	36.8	9.5	19	22	350
10	3/8	ST. 63.06.04	9/16	1/4	26.9	32.5	9.5	14	19	350
10	3/8	ST. 63.06.06	9/16	3/8	29	37.5	9.5	19	22	350
10	3/8	ST. 63.06.08	9/16	1/2	31.1	43	13	22	27	350
12	1/2	ST. 63.08.04	3/4	1/4	31.8	33.5	9.5	19	19	350
12	1/2	ST. 63.08.06	3/4	3/8	31.8	37.5	9.5	19	22	350
12	1/2	ST. 63.08.08	3/4	1/2	33.7	43	13	22	27	350
12	1/2	ST. 63.08.12	3/4	3/4	36	49.5	13	27	36	350
14-15-16	5/8	ST. 63.10.06	7/8	3/8	36.8	39.1	9.5	22	22	350
14-15-16	5/8	ST. 63.10.08	7/8	1/2	36.8	43	13	22	27	350
14-15-16	5/8	ST. 63.10.12	7/8	3/4	38.9	49.5	13	27	36	350
18-20	3/4	ST. 63.12.08	1" 1/16	1/2	42.2	45.2	13	27	27	250
18-20	3/4	ST. 63.12.12	1" 1/16	3/4	42.2	49.5	13	27	36	250
18-20	3/4	ST. 63.12.16	1" 1/16	1"	44.8	52	16	33	41	250
25	1"	ST. 63.16.12	1" 5/16	3/4	46	52	13	33	36	250
25	1"	ST. 63.16.16	1" 5/16	1"	46	52	16	33	41	250
25	1"	ST. 63.16.20	1" 5/16	1" 1/4	51	57	16	41	50	250
30-32	1" 1/4	ST. 63.20.16	1" 5/8	1"	52.3	57	16	41	41	175
30-32	1" 1/4	ST. 63.20.20	1" 5/8	1" 1/4	52.3	57	16	41	50	175
38	1" 1/2	ST. 63.24.20	1" 7/8	1" 1/4	59.2	60.5	16	48	50	140
38	1" 1/2	ST. 63.24.24	1" 7/8	1" 1/2	59.2	60.5	16	48	55	140

1) – 2) AISI 316L CH = 14 B = 26.9 B2 = 28.5

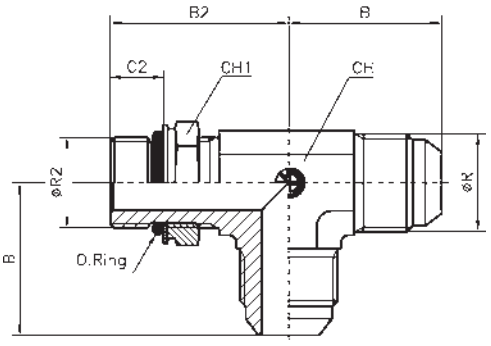

BODY: DERIVATING "T" METRIC - ISO 6149-3

接头体：美制 JIC 外螺纹 74° 外锥 / 公制外螺纹可调式轻型系列 ISO 6149-3 三通

Ø 钢管外径		订货型号	Ø 螺纹	Ø R2 公制螺纹	B	B2	C2	CH	CH1	PN
公制	英制									
6	1/4	ST. 64.04.02	7/16	10 × 1	22.6	27	8.5	11 1)	14	350
8	5/16	ST. 64.05.03	1/2	12 × 1.5	24.1	29	11	13 2)	17	350
10	3/8	ST. 64.06.04	9/16	14 × 1.5	26.9	34	11	14	19	350
12	1/2	ST. 64.08.05	3/4	16 × 1.5	31.8	36	11.5	19	22	350
12	1/2	ST. 64.08.06	3/4	18 × 1.5	31.8	38	12.5	19	24	350
14-15-16	5/8	ST. 64.10.06	7/8	18 × 1.5	36.8	41.5	12.5	22	24	350
14-15-16	5/8	ST. 64.10.08	7/8	22 × 1.5	36.8	42.5	12.5	22	27	350
18-20	3/4	ST. 64.12.08	1" 1/16	22 × 1.5	42.2	45	12.5	27	27	350
18-20	3/4	ST. 64.12.14	1" 1/16	27 × 2	42.2	51	15.5	27	32	350
25	1"	ST. 64.16.14	1" 5/16	27 × 2	46	53	15.5	33	32	280

1) – 2) AISI 316L CH = 14 B = 26.9 B2 = 31.5/34

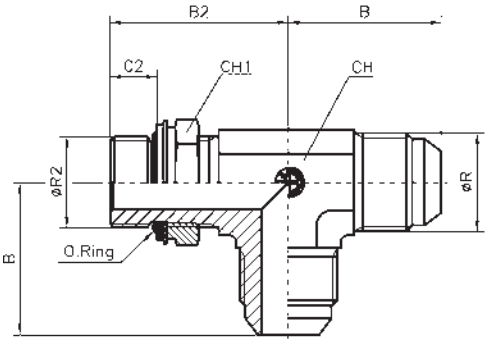

BODY: DERIVATING "T" METRIC - O-RING SEAL RING

接头体：美制 JIC 外螺纹 74° 外锥 / 公制外螺纹带 O 型圈可调式三通

Ø 钢管外径		订货型号	Ø 螺纹	Ø R2 公制螺纹	B	B2	C2	CH	CH1	PN
公制	英制									
6	1/4	ST. 64.04.02 W	7/16	10 × 1	22.6	27	7.5	11 1)	14	350
8	5/16	ST. 64.05.03 W	1/2	12 × 1.5	24.1	29	9.5	13 2)	17	350
10	3/8	ST. 64.06.04 W	9/16	14 × 1.5	26.9	34	9.5	14	19	350
12	1/2	ST. 64.08.05 W	3/4	16 × 1.5	31.8	36	10	19	22	350
12	1/2	ST. 64.08.06 W	3/4	18 × 1.5	31.8	38	11	19	24	350
14-15-16	5/8	ST. 64.10.06 W	7/8	18 × 1.5	36.8	41.5	11	22	24	350
14-15-16	5/8	ST. 64.10.08 W	7/8	22 × 1.5	36.8	42.5	11	22	27	350
18-20	3/4	ST. 64.12.08 W	1" 1/16	22 × 1.5	42.2	45	11	27	27	350
18-*20	3/4	ST. 64.12.14 W	1" 1/16	27 × 2	42.2	51	13.5	27	32	350
25	1"	ST. 64.16.14 W	1" 5/16	27 × 2	46	53	13.5	33	32	250

1) – 2) AISI 316L CH = 14 B = 26.9 B2 = 31.5/34

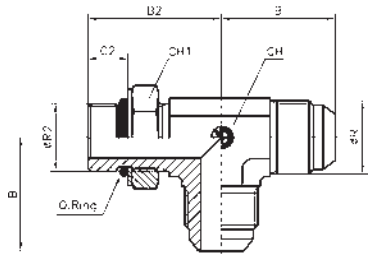

BODY: DERIVATING "T" UNF 2A
接头体：美制 JIC 外螺纹 74°
外锥 /UNF 外螺纹可调式 T 型三通

Ø 钢管外径		订货型号	Ø 螺纹°	Ø R2 UNF	B	B2	C2	CH	CH1	PN
公制	英制									
6	1/4	ST. 65.04.04	7/16	7/16	22.6	26.2	9	11 1)	14	350
8	5/16	ST. 65.05.05	1/2	1/2	24.1	27.7	9	13 2)	16 3)	350
10	3/8	ST. 65.06.06	9/16	9/16	26.9	31.8	10	14	17	350
12	1/2	ST. 65.08.08	3/4	3/4	31.8	36.8	11	19	22	350
14	-	ST. 65.10.10	7/8	7/8	36.8	43.2	12.7	22	27	350
15	-	ST. 65.10.10	7/8	7/8	36.8	43.2	12.7	22	27	350
16	5/8	ST. 65.10.10	7/8	7/8	36.8	43.2	12.7	22	27	350
18	-	ST. 65.12.12	1" 1/16	1" 1/16	42.2	49.3	15	27	32	350
20	3/4	ST. 65.12.12	1" 1/16	1" 1/16	42.2	49.3	15	27	32	350
25	1"	ST. 65.16.16	1" 5/16	1" 5/16	46	52.1	15	33	38	280
30	-	ST. 65.20.20	1" 5/8	1" 5/8	52.3	57.2	15	41	50	210
32	1" 1/4	ST. 65.20.20	1" 5/8	1" 5/8	52.3	57.2	15	41	50	210
38	1" 1/2	ST. 65.24.24	1" 7/8	1" 7/8	59.2	60.7	15	48	55	140

1) - 2) AISI 316L CH = 14 B = 26.9 B2 = 30.8 3) AISI 316L CH1 =17

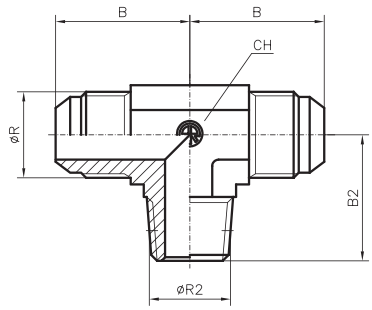

BODY: "T" MALE LINE NPT
接头体：美制 JIC 外螺纹 74°
外锥 /NPT 外螺纹三通

Ø 钢管外径		订货型号	Ø 螺纹	Ø R2 NPT	B	B2	CH	PN	
公制	英制								
6	1/4	ST. 66.04.02	7/16	1/8	22.6	19.8	11 1)	350	
6	1/4	ST. 66.04.04	7/16	1/4	26.9	27.7	14	350	
8	5/16	ST. 66.05.02	1/2	1/8	24.1	19.8	13 2)	350	
10	3/8	ST. 66.06.04	9/16	1/4	26.9	27.7	14	350	
10	3/8	ST. 66.06.06	9/16	3/8	29	31	19	350	
12	1/2	ST. 66.08.06	3/4	3/8	31.8	31	19	350	
12	1/2	ST. 66.08.08	3/4	1/2	33.7	37.3	22	350	
14	-	ST. 66.10.08	7/8	1/2	36.8	37.3	22	350	
15	-	ST. 66.10.08	7/8	1/2	36.8	37.3	22	350	
16	5/8	ST. 66.10.08	7/8	1/2	36.8	37.3	22	350	
18	-	ST. 66.12.12	1" 1/16	3/4	42.2	40.4	27	350	
20	3/4	ST. 66.12.12	1" 1/16	3/4	42.2	40.4	27	350	
25	1"	ST. 66.16.16	1" 5/16	1"	46	50	33	280	
30	-	ST. 66.20.20	1" 5/8	1" 1/4	52.3	59.6	41	210	
32	1" 1/4	ST. 66.20.20	1" 5/8	1" 1/4	52.3	59.6	41	210	
38	1" 1/2	ST. 66.24.24	1" 7/8	1" 1/2	59.2	67.1	48	140	

1) - 2) AISI 316L CH = 14 B = 26.9

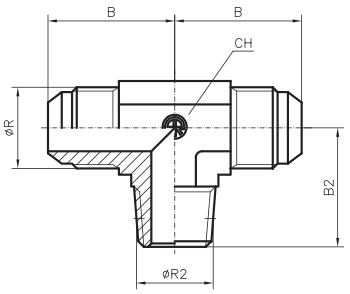

BODY: "T" MALE LINE BSPT (BSP TAPERED)

接头体：美制 JIC 外螺纹 74° 外锥 /BSPT 外螺纹三通

Ø 钢管外径		订货型号	Ø 螺纹	Ø R2 BSPT	B	B2	CH	PN	
公制	英制								
6	1/4	ST. 67.04.02	7/16	1/8	22.6	19.8	11 1)	350	
8	5/16	ST. 67.05.02	1/2	1/8	24.1	19.8	13 2)	350	
10	3/8	ST. 67.06.04	9/16	1/4	26.9	27.7	14	350	
12	1/2	ST. 67.08.06	3/4	3/8	31.8	31	19	350	
14	-	ST. 67.10.08	7/8	1/2	36.8	37.3	22	350	
15	-	ST. 67.10.08	7/8	1/2	36.8	37.3	22	350	
16	5/8	ST. 67.10.08	7/8	1/2	36.8	37.3	22	350	
18	-	ST. 67.12.12	1" 1/16	3/4	42.2	40.4	27	350	
20	3/4	ST. 67.12.12	1" 1/16	3/4	42.2	40.4	27	350	
25	1"	ST. 67.16.16	1" 5/16	1"	46	50	33	280	

1) – 2) AISI 316L CH = 14 B = 26.9

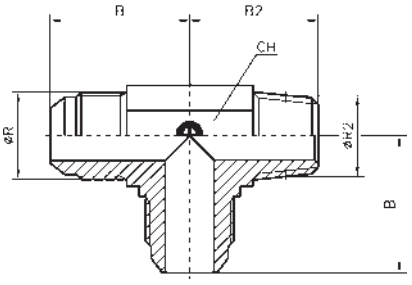

BODY:DERIVATING "T" NPT

接头体：美制 JIC 外螺纹 74° 外锥 /NPT 外螺纹 T 型三通

Ø 钢管外径		订货型号	Ø 螺纹	Ø R2 NPT	B	B2	CH	PN	
公制	英制								
6	1/4	ST. 68.04.02	7/16	1/8	22.6	19.8	11 1)	350	
6	1/4	ST. 68.04.04	7/16	1/4	26.9	27.7	14	350	
8	5/16	ST. 68.05.02	1/2	1/8	24.1	19.8	13 2)	350	
10	3/8	ST. 68.06.04	9/16	1/4	26.9	27.7	14	350	
10	3/8	ST. 68.06.06	9/16	3/8	29	31	19	350	
12	1/2	ST. 68.08.06	3/4	3/8	31.8	31	19	350	
12	1/2	ST. 68.08.08	3/4	1/2	33.7	37.3	22	350	
14	-	ST. 68.10.08	7/8	1/2	36.8	37.3	22	350	
15	-	ST. 68.10.08	7/8	1/2	36.8	37.3	22	350	
16	5/8	ST. 68.10.08	7/8	1/2	36.8	37.3	22	350	
18	-	ST. 68.12.12	1" 1/16	3/4	42.2	40.4	27	350	
20	3/4	ST. 68.12.12	1" 1/16	3/4	42.2	40.4	27	350	
25	1"	ST. 68.16.16	1" 5/16	1"	46	50	33	280	
30	-	ST. 68.20.20	1" 5/8	1" 1/4	52.3	59.6	41	210	
32	1" 1/4	ST. 68.20.20	1" 5/8	1" 1/4	52.3	59.6	41	210	
38	1" 1/2	ST. 68.24.24	1" 7/8	1" 1/2	59.2	67.1	48	140	

1) – 2) AISI 316L CH = 14 B = 26.9

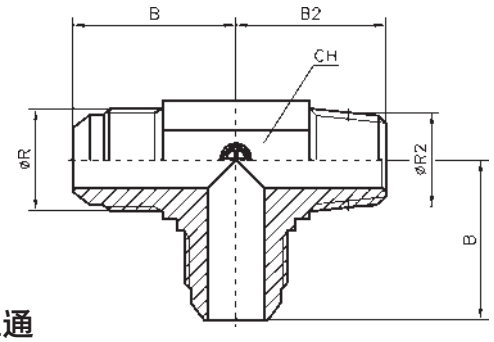

BODY: DERIVATING "T" BSPT (BSP TAPERED)

接头体：美制 JIC 外螺纹 74° 外锥 /BSPT 外螺纹 T 型三通

Ø 钢管外径		订货型号	Ø 螺纹	Ø R2 BSPT	B	B2	CH	PN	
公制	英制								
6	1/4	ST. 69.04.02	7/16	1/8	22.6	19.8	11 1)	350	
8	5/16	ST. 69.05.02	1/2	1/8	24.1	19.8	13 2)	350	
10	3/8	ST. 69.06.04	9/16	1/4	26.9	27.7	14	350	
12	1/2	ST. 69.08.06	3/4	3/8	31.8	31	19	350	
14	-	ST. 69.10.08	7/8	1/2	36.8	37.3	22	350	
15	-	ST. 69.10.08	7/8	1/2	36.8	37.3	22	350	
16	5/8	ST. 69.10.08	7/8	1/2	36.8	37.3	22	350	
18	-	ST. 69.12.12	1" 1/16	3/4	42.2	40.4	27	350	
20	3/4	ST. 69.12.12	1" 1/16	3/4	42.2	40.4	27	350	
25	1"	ST. 69.16.16	1" 5/16	1"	46	50	33	280	

1) – 2) AISI 316L CH = 14 B = 26.9

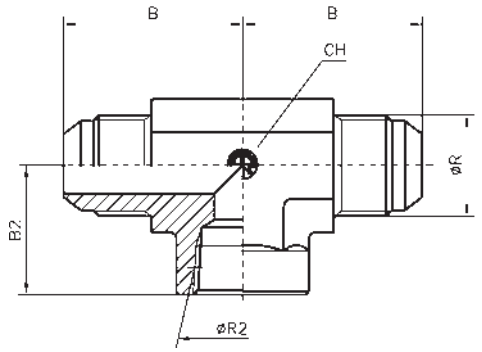

BODY: "T" MALE LINE FEMALE NPT

接头体：美制 JIC 外螺纹 74° 外锥 /NPT 内螺纹 T 型三通

Ø 钢管外径		订货型号	Ø 螺纹	Ø R2 NPT	B	B2	CH	PN	
公制	英制								
6	1/4	ST. 71.04.02	7/16	1/8	27.4	16.8	14	350	
6	1/4	ST. 71.04.04	7/16	1/4	31	22.4	19	350	
8	5/16	ST. 71.05.02	1/2	1/8	27.4	16.8	14	350	
10	3/8	ST. 71.06.04	9/16	1/4	31.2	22.4	19	350	
12	1/2	ST. 71.08.06	3/4	3/8	36.1	25.9	22	350	
14	-	ST. 71.10.08	7/8	1/2	41.7	31.2	27	350	
15	-	ST. 71.10.08	7/8	1/2	41.7	31.2	27	350	
16	5/8	ST. 71.10.08	7/8	1/2	41.7	31.2	27	350	
18	-	ST. 71.12.12	1" 1/16	3/4	48	34.5	33	350	
20	3/4	ST. 71.12.12	1" 1/16	3/4	48	34.5	33	350	
25	1"	ST. 71.16.16	1" 5/16	1"	55.1	41.4	41	250	
30	-	ST. 71.20.20	1" 5/8	1" 1/4	59.2	43.2	48	210	
32	1" 1/4	ST. 71.20.20	1" 5/8	1" 1/4	59.2	43.2	48	210	

BODY: DERIVATING "T" FEMALE NPT
接头体：美制 JIC 外螺纹 74° 外锥 /NPT 内螺纹 T 型三通

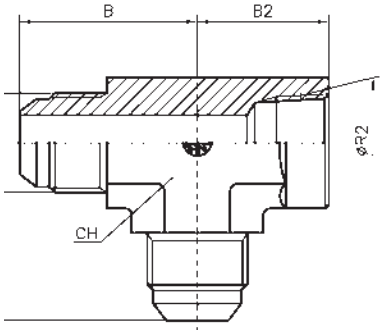

Ø 钢管外径		订货型号	Ø 螺纹	Ø R2 NPT	B	B2	CH	PN	
公制	英制								
6	1/4	ST. 73.04.02	7/16	1/8	27.4	16.8	14	350	
6	1/4	ST. 73.04.04	7/16	1/4	31	22.4	19	350	
8	5/16	ST. 73.05.02	1/2	1/8	27.4	16.8	14	350	
10	3/8	ST. 73.06.04	9/16	1/4	31.2	22.4	19	350	
12	1/2	ST. 73.08.06	3/4	3/8	36.1	25.9	22	350	
14	-	ST. 73.10.08	7/8	1/2	41.7	31.2	27	350	
15	-	ST. 73.10.08	7/8	1/2	41.7	31.2	27	350	
16	5/8	ST. 73.10.08	7/8	1/2	41.7	31.2	27	350	
18	-	ST. 73.12.12	1” 1/16	3/4	48	34.5	33	350	
20	3/4	ST. 73.12.12	1” 1/16	3/4	48	34.5	33	350	
25	1”	ST. 73.16.16	1” 5/16	1”	55.1	41.4	41	250	
30	-	ST. 73.20.20	1” 5/8	1” 1/4	59.2	43.2	48	210	
32	1” 1/4	ST. 73.20.20	1” 5/8	1” 1/4	59.2	43.2	48	210	

FLARING TOOLS: PUNCHES AND PIPE TONGS
扩口工具：扩口器和管钳

These tools are used on the vice for flaring dia.6 to dia. 38 steel plpes.
From dia. 20 pipes upwards it is necessary to use a preflaring punch.
这些工具适用于外径 Ø6–Ø38 钢管的扩口
Ø20 以上的管子需要使用预扩口模具

TN 352

TN 353

TN 354 – TN 355

Ø TUBE 公制管外径 mm	PRE-FLARING PUNCH 扩口模具	PUNCH 扩口器	TUBE TONGS 管钳	Ø TUBE 英制管外径 mm	PRE-FLARING PUNCH 扩口模具	PUNCH 扩口器	TUBE TONGS 管钳
6	-	TN 353-08	TN 354-06	1/4	-	TN 353-08	TN 355-04
8	-	TN 353-08	TN 354-08	5/16	-	TN 353-08	TN 354-08
10	-	TN 353-08	TN 354-10	3/8	-	TN 353-08	TN 355-06
12	-	TN 353-14	TN 354-12	1/2	-	TN 353-14	TN 355-08
14	-	TN 353-14	TN 354-14	-	-	-	-
15	-	TN 353-14	TN 354-15	-	-	-	-
16	-	TN 353-14	TN 354-16	5/8	-	TN 353-14	TN 355-10
18	-	TN 353-18	TN 354-18	-	-	-	-
20	TN 352-1	TN 353-18	TN 354-20	3/4	TN 352-1	TN 353-18	TN 355-12
25	TN 352-1	TN 353-22	TN 354-25	1”	TN 352-1	TN 353-22	TN 355-16
30	TN 352-1	TN 353-32	TN 354-30	-	TN 352-1	-	-
32	TN 352-1	TN 353-32	TN 354-32	1” 1/4	TN 352-1	TN 353-32	TN 355-20
38	TN 352-1	TN 353-38	TN 354-38	1” 1/2	TN 352-1	TN 353-38	TN 355-24

FITTINGS FOR HIGH PRESSURE GAS THREAD
高压英制螺纹接头

The thread system in this type of fitting is used by BRITISH STANDARD PIPE (B.S.P. WHITWORTH GAS THREAD).
这类接头的管系是符合英国标准管（BSP 惠氏管螺纹）。
The pipe/duct joint is effected through autogenous or arc welding with steel. After the pieces have been welded. cooling must be gradual.
受自身或电弧焊的影响，钢管和管接头在焊接后，必须渐进冷却。
Pipes generally used are made out of weldless cold-drawn steel for hydraulic ducts.
通常使用的液压管是无缝冷拔钢。
The following table shows the duct cross-section each thread diameter.
表格所示是每个螺纹尺寸对应的截面流速。

FITTING THREAD 管接头螺纹尺寸	MINIMUM DUCT CROSS SECTION (cm²) MIN. 最小截流面	MAXIMUM CAPACITY l/M 最大流量 at 1.5 m/s 吸油管路	MAXIMUM CAPACITY l/M 最大流量 at 4 m/s 回油管路
1/4"	0.28	2.52	6.72
3/8"	0.63	5.70	15.10
1/2"	1.13	10.20	27.10
3/4"	1.76	15.80	42.20
1"	3.14	28.20	75.30
1" 1/4	5.30	47.70	127.00
1" 1/2	8.55	77.00	205.00

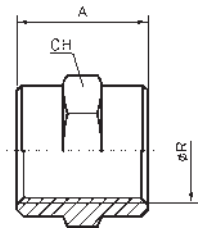

ADAPTORS - BSPP

两端英管外螺纹 60° 内锥面 / 六角端面组合 密封直通

Ø 钢管外径		订货型号	Ø R-BSPP	A	CH	PN	
公制	英制						
-	-	34. 00.02.02	1/8	18	17	350	
-	-	34. 00.04.04	1/4	26	19	350	
-	-	34. 00.06.06	3/8	27	24	315	
-	-	34. 00.08.08	1/2	31	30	210	
-	-	34. 00.12.12	3/4	35	36	210	
-	-	34. 00.16.16	1”	41	41	120	
-	-	34. 00.20.20	1” 1/4	45	55	105	
-	-	34. 00.24.24	1” 1/2	45	60	105	

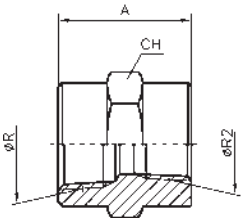

REDUCED ADAPTORS - BSPT

两端变径密封英锥管外螺纹 60° 内锥面直通

Ø 钢管外径		订货型号	Ø R-BSPT	Ø R2-BSPT	A	CH	PN	
公制	英制							
-	-	34. 01.04.02	1/4	1/8	24.2	19	420	
-	-	34. 01.06.02	3/8	1/8	24.2	22	420	
-	-	34. 01.06.04	3/8	1/4	28.7	22	420	
-	-	34. 01.08.04	1/2	1/4	34.8	30	350	
-	-	34. 01.08.06	1/2	3/8	34.8	30	350	
-	-	34. 01.12.04	3/4	1/4	35.6	36	280	
-	-	34. 01.12.08	3/4	1/2	38.9	36	280	

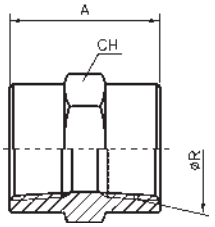

ADAPTORS - BSPT

两端等径英锥管外螺纹 60° 内锥面直通

Ø 钢管外径		订货型号	Ø R-BSPT	A	CH	PN	
公制	英制						
-	-	34. 02.02.02	1/8	19	16 1)	420	
-	-	34. 02.04.04	1/4	28.7	19	420	
-	-	34. 02.06.06	3/8	28.7	22	420	
-	-	34. 02.08.08	1/2	38.1	30	350	
-	-	34. 02.12.12	3/4	38.9	36	280	
-	-	34. 02.16.16	1”	48	41	210	
-	-	34. 02.20.20	1” 1/4	49	50	175	
-	-	34. 02.24.24	1” 1/2	49	60	140	

1) AISI 316L CH = 17

REDUCED ADAPTORS NPT

两端变径 NPT（布锥管）外螺纹 60° 内锥面直通

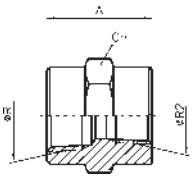

Ø 钢管外径		订货型号	Ø R-NPT	Ø R2-NPT	A	CH	PN	
公制	英制							
-	-	34. 03.04.02	1/4	1/8	24.2	19	420	
-	-	34. 03.06.02	3/8	1/8	24.2	22	420	
-	-	34. 03.06.04	3/8	1/4	28.7	22	420	
-	-	34. 03.08.04	1/2	1/4	34.8	30	350	
-	-	34. 03.08.06	1/2	3/8	34.8	30	350	
-	-	34. 03.12.04	3/4	1/4	35.6	36	280	
-	-	34. 03.12.08	3/4	1/2	38.9	36	280	

ADAPTORS - NPT

两端等径 NPT（布锥管）外螺纹 60° 内锥面直通

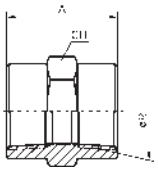

Ø 钢管外径		订货型号	Ø R-NPT	A	CH	PN	
公制	英制						
-	-	34. 04.02.02	1/8	19	16 1)	420	
-	-	34. 04.04.04	1/4	28.7	19	420	
-	-	34. 04.06.06	3/8	28.7	22	420	
-	-	34. 04.08.08	1/2	38.1	30	350	
-	-	34. 04.12.12	3/4	38.9	36	280	
-	-	34. 04.16.16	1”	48	41	210	
-	-	34. 04.20.20	1” 1/4	49	50	175	
-	-	34. 04.24.24	1” 1/2	49	60	140	

1) AISI 316L CH = 17

ADAPTORS - FEMALE / FEMALE WITH ROTARY NUT

两端等径英制内螺纹 60° 外锥密封直通

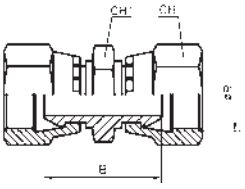

Ø 钢管外径		订货型号	Ø R BSPP	B	CH	CH1	PN	
公制	英制							
-	-	34. 11.02.02	1/8	31	14	14	350	
-	-	34. 11.04.04	1/4	31	19	19	350	
-	-	34. 11.06.06	3/8	35	22	22	350	
-	-	34. 11.08.08	1/2	39.5	27	27	200	
-	-	34. 11.10.10	5/8	42.5	28 1)	30	200	
-	-	34. 11.12.12	3/4	43.5	32	32	200	
-	-	34. 11.16.16	1”	47.5	38 2)	41	120	
-	-	34. 11.20.20	1” 1/4	56.5	50	50	105	
-	-	34. 11.24.24	1” 1/2	66.5	55	55	105	

1) AISI 316L CH = 30 2) AISI 316L CH = 41

REDUCED ADAPTORS - FEMALE / FEMALE WITH ROTARY NUT

两端变径英制内螺纹 60° 外锥密封直通

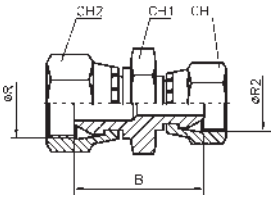

Ø 钢管外径		订货型号	Ø R BSPP	Ø R2 BSPP	B	CH	CH1	CH2	PN
公制	英制								
-	-	34. 12.06.04	3/8	1/4	33	22	22	19	350
-	-	34. 12.08.04	1/2	1/4	35.5	27	27	19	200
-	-	34. 12.08.06	1/2	3/8	37.5	27	27	22	200
-	-	34. 12.12.08	3/4	1/2	42	32	32	27	200

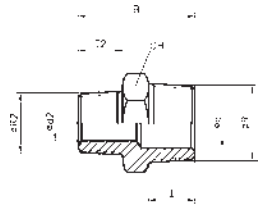

REDUCED MALE NIPPLE NPT/NPT THREAD
两端变径布锥管外螺纹直通接头

Ø 钢管外径		订货型号	Ø R NPT	Ø R2 NPT	Ø d	Ø d2	I	I2	B	CH	PN
公制	英制										
-	-	34. 57.04.02	1/4	1/8	7	4.5	14.2	9.7	32.3	16 1)	420
-	-	34. 57.06.02	3/8	1/8	10	4.5	14.2	9.7	32.3	19	420
-	-	34. 57.06.04	3/8	1/4	10	7	14.2	14.2	36.8	19	420
-	-	34. 57.08.04	1/2	1/4	13.5	7	19	14.2	43.2	22	420
-	-	34. 57.08.06	1/2	3/8	13.5	10	19	14.2	43.2	22	420
-	-	34. 57.12.04	3/4	1/4	18	7	19	14.2	45	30	420
-	-	34. 57.12.08	3/4	1/2	18	13.5	19	19	49.8	30	420
-	-	34. 57.16.12	1"	3/4	23	18	23.9	19	54.5	36	420
-	-	34. 57.20.16	1" 1/4	1"	31	23	24.6	23.9	62.3	46	350

1) AISI 316L CH = 17

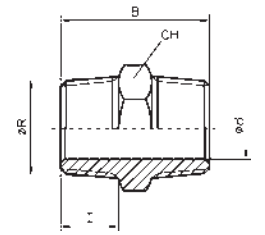

MALE NIPPLE STUD COUPLING NPT/NPT THREAD
等径 NPT 外螺纹直通

Ø 钢管外径		订货型号	Ø R NPT	Ø d	B	I	CH	PN	
公制	英制								
-	-	34. 58.02.02	1/8	4.5	26.9	9.7	11 1)	420	
-	-	34. 58.04.04	1/4	7	36.8	14.2	16 2)	420	
-	-	34. 58.06.06	3/8	10	36.8	14.2	19	420	
-	-	34. 58.08.08	1/2	13.5	48	19	22	420	
-	-	34. 58.12.12	3/4	18	49.8	19	30	420	
-	-	34. 58.16.16	1"	23	59.4	23.9	36	420	
-	-	34. 58.20.20	1" 1/4	31	63	24.6	46	350	
-	-	34. 58.24.24	1" 1/2	38	66.3	25.4	50	210	
-	-	34. 58.32.32	2"	49	71.6	26.2	65	210	

1) AISI 316L CH = 12 2) AISI 316L CH =17

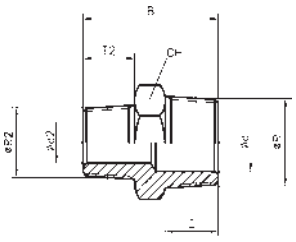

REDUCED MALE NIPPLE - STRAIGHT COUPLING BSPT TAPARED THREAD
变径 NPT 外螺纹直通

Ø 钢管外径		订货型号	Ø R BSPT	Ø R2 BSPT	Ø d	Ø d2	I	I2	B	CH	PN
公制	英制										
-	-	34. 59.04.02	1/4	1/8	7	4.5	13	10	32.3	14	420
-	-	34. 59.06.02	3/8	1/8	10	4.5	13	10	33.8	17	420
-	-	34. 59.06.04	3/8	1/4	10	7	13	13	36.8	17	420
-	-	34. 59.08.04	1/2	1/4	13.5	7	16	13	43.2	22	420
-	-	34. 59.08.06	1/2	3/8	13.5	10	16	13	43.2	22	420
-	-	34. 59.12.04	3/4	1/4	18	7	18	13	46.8	27	420
-	-	34. 59.12.08	3/4	1/2	18	13.5	18	16	49.8	27	420
-	-	34. 59.16.12	1"	3/4	23	18	20	18	54.5	36	420
-	-	34. 59.20.16	1" 1/4	1"	30	23	21	20	62	46	350

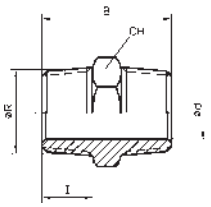

MALE NIPPLE STUD COUPLING BSPT THREAD
BSPT 外螺纹直通

Ø 钢管外径		订货型号	Ø R BSPT	Ø d	B	I	CH	PN	
公制	英制								
-	-	34. 60.02.02	1/8	4.5	26.9	10	11 1)	420	
-	-	34. 60.04.04	1/4	7	36.8	13	14	420	
-	-	34. 60.06.06	3/8	10	36.8	13	17	420	
-	-	34. 60.08.08	1/2	13.5	48	16	22	420	
-	-	34. 60.12.12	3/4	18	49.8	18	27	420	
-	-	34. 60.16.16	1"	23	59.4	20	36	420	
-	-	34. 60.20.20	1" 1/4	31	63	21	46	350	
-	-	34. 60.24.24	1" 1/2	38	66.3	22	50	210	
-	-	34. 60.32.32	2"	49	71.6	25	65	210	

1) AISI 316L CH = 12

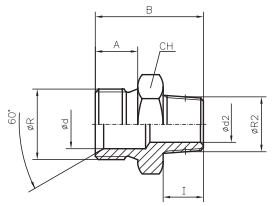

REDUCED MALE NIPPLE STRAIGHT COUPLING BSPP PARALLEL THREAD/NPT
变径 BSPP 外螺纹 /NPT 外螺纹直通

Ø 钢管外径		订货型号	Ø R BSPP	Ø R2 NPT	Ø d	Ø d2	B	A	I	CH	PN
公制	英制										
-	-	34. 64.02.04	1/8	1/4	4	4	32.2	10	14.2	17	350
-	-	34. 64.04.02	1/4	1/8	6	4	28.7	11	9.7	17	350
-	-	34. 64.04.06	1/4	3/8	6	6	34.7	11	14.2	19	350
-	-	34. 64.06.04	3/8	1/4	8	6	36.7	13	14.2	19	350
-	-	34. 64.06.08	3/8	1/2	8	8	42	13	19	24	350
-	-	34. 64.08.06	1/2	3/8	11	8	38.2	14	14.2	24	200
-	-	34. 64.08.12	1/2	3/4	11	11	43	14	19	32	200
-	-	34. 64.12.08	3/4	1/2	17	11	46	17	19	32	200
-	-	34. 64.12.16	3/4	1"	17	17	52.9	17	23.9	41	200
-	-	34. 64.16.12	1"	3/4	23	17	51	20	19	41	120
-	-	34. 64.16.20	1"	1" 1/4	23	31	56.6	20	24.6	46	120
-	-	34. 64.20.24	1" 1/4	1" 1/2	30	38	60	21	25.4	50	105

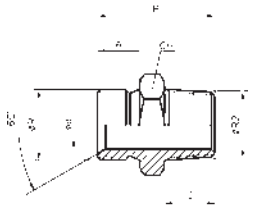

MALE NIPPLE STUD COUPLING BSPP PARALLEL/NPT
BSPP 外螺纹 /BSPT 外螺纹直通

Ø 钢管外径		订货型号	Ø R BSPP	Ø R2 NPT	Ø d	B	A	I	CH	PN	
公制	英制										
-	-	34. 65.02.02	1/8	1/8	4	25.7	10	9.7	12	350	
-	-	34. 65.04.04	1/4	1/4	6	33.2	11	14.2	17	350	
-	-	34. 65.06.06	3/8	3/8	8	36.7	13	14.2	19	350	
-	-	34. 65.08.08	1/2	1/2	11	43	14	19	24	200	
-	-	34. 65.12.12	3/4	3/4	17	46	17	19	32	200	
-	-	34. 65.16.16	1"	1"	23	55.9	20	23.9	41	120	
-	-	34. 65.20.20	1" 1/4	1" 1/4	31	58.6	20	24.6	50	105	
-	-	34. 65.24.24	1" 1/2	1" 1/2	38	63.4	22	25.4	55	105	
-	-	34. 65.32.32	2"	2"	49	68.2	25	26.2	70	70	

REDUCED MALE NIPPLE STRAIGHT COUPLING
BSPP PARALLEL - BSP TAPERED THREAD
变径 BSPP 外螺纹 /BSPT 外螺纹直通

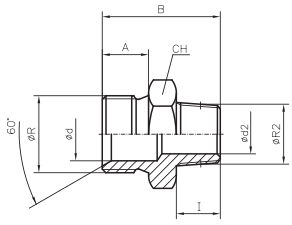

Ø 钢管外径		订货型号	Ø R BSPP	Ø R2 BSPT	Ø d	Ø d2	B	A	I	CH	PN
公制	英制										
-	-	34. 66.02.04	1/8	1/4	4	4	31	10	13	17	350
-	-	34. 66.04.02	1/4	1/8	6	4	29	11	10	17	350
-	-	34. 66.04.06	1/4	3/8	6	6	33.5	11	13	19	350
-	-	34. 66.06.04	3/8	1/4	8	6	35.5	13	13	19	350
-	-	34. 66.06.08	3/8	1/2	8	8	39	13	16	24	200
-	-	34. 66.08.06	1/2	3/8	11	8	37	14	13	24	200
-	-	34. 66.08.12	1/2	3/4	11	14	42	14	18	27	200
-	-	34. 66.10.08	5/8	1/2	14	11	41	15	16	27	200
-	-	34. 66.10.12	5/8	3/4	14	14	43	15	18	32	200
-	-	34. 66.12.08	3/4	1/2	17	11	43	17	16	32	200
-	-	34. 66.12.16	3/4	1”	17	17	49	17	20	41	120
-	-	34. 66.16.12	1”	3/4	23	17	50	20	18	41	120
-	-	34. 66.16.20	1”	1" 1/4	23	31	53	20	21	46	120
-	-	34. 66.20.24	1” 1/4	1" 1/2	30	35	56	20	22	50	105

REDUCED MALE NIPPLE STRAIGHT COUPLING
BSP PARALLEL THREAD
变径 BSPP 外螺纹直通

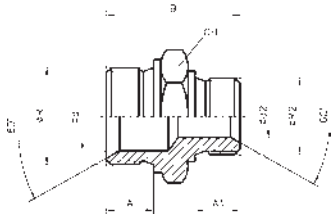

Ø 钢管外径		订货型号	Ø R BSPP	Ø R2 BSPP	Ø d	Ø d2	B	A	A1	CH	PN
公制	英制										
-	-	34. 67.04.02	1/4	1/8	6	4	28.5	11	8	19	350
-	-	34. 67.06.02	3/8	1/8	8	4	30.5	12	8	22	350
-	-	34. 67.06.04	3/8	1/4	8	6	33.5	12	11	22	350
-	-	34. 67.08.02	1/2	1/8	11	4	36.5	14	8	27	200
-	-	34. 67.08.04	1/2	1/4	11	6	36.5	14	11	27	200
-	-	34. 67.08.06	1/2	3/8	11	8	38	14	12	27	200
-	-	34. 67.10.04	5/8	1/4	14	6	39	16	11	30	200
-	-	34. 67.10.06	5/8	3/8	14	8	40	16	12	30	200
-	-	34. 67.10.08	5/8	1/2	14	11	42	16	14	30	200
-	-	34. 67.12.04	3/4	1/4	17	6	40	16	11	32	200
-	-	34. 67.12.06	3/4	3/8	17	8	41	16	12	32	200
-	-	34. 67.12.08	3/4	1/2	17	11	43.5	16	14	32	200
-	-	34. 67.12.10	3/4	5/8	17	14	45.5	16	16	32	200
-	-	34. 67.16.04	1”	1/4	23	6	44.5	19	11	41	120
-	-	34. 67.16.06	1”	3/8	23	8	45.5	19	12	41	120
-	-	34. 67.16.08	1”	1/2	23	11	47.5	19	14	41	120
-	-	34. 67.16.10	1”	5/8	23	14	49.5	19	16	41	120
-	-	34. 67.16.12	1”	3/4	23	17	49.5	19	16	41	120
-	-	34. 67.20.08	1” 1/4	1/2	30	11	51.5	20	14	50	105
-	-	34. 67.20.10	1” 1/4	5/8	30	14	53.5	20	16	50	105
-	-	34. 67.20.12	1” 1/4	3/4	30	17	53.5	20	16	50	105
-	-	34. 67.20.16	1” 1/4	1”	30	23	56.5	20	19	50	105
-	-	34. 67.24.08	1” 1/2	1/2	35	11	53.5	22	14	55	105
-	-	34. 67.24.12	1” 1/2	3/4	35	17	55.5	22	16	55	105
-	-	34. 67.24.16	1” 1/2	1”	35	23	58.5	22	19	55	105
-	-	34. 67.24.20	1” 1/2	1” 1/4	35	30	59.5	22	20	55	105
-	-	34. 67.32.16	2"	1”	46	23	62	25	19	70	70
-	-	34. 67.32.20	2"	1” 1/4	46	30	63	25	20	70	70
-	-	34. 67.32.24	2"	1” 1/2	46	35	65	25	22	70	70

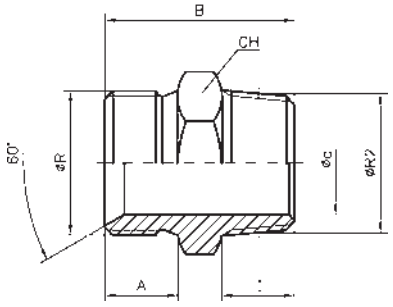

MALE NIPPLE STUD COUPLING
BSP PARALLEL - BSP TAPERED THREAD
BSP 直 /BSP 锥外螺纹直通

Ø 钢管外径		订货型号	Ø R BSPP	Ø R2 BSPT	Ø d	B	A	I	CH	PN	
公制	英制										
-	-	34. 68.02.02	1/8	1/8	4	26	10	10	12	350	
-	-	34. 68.04.04	1/4	1/4	6	32	11	13	17	350	
-	-	34. 68.06.06	3/8	3/8	8	35.5	13	13	19	350	
-	-	34. 68.08.08	1/2	1/2	11	40	14	16	24	200	
-	-	34. 68.12.12	3/4	3/4	17	45	17	18	32	200	
-	-	34. 68.16.16	1”	1”	23	52	20	20	41	120	
-	-	34. 68.20.20	1” 1/4	1” 1/4	30	55	21	21	46	105	
-	-	34. 68.24.24	1” 1/2	1” 1/2	35	58	22	22	55	105	
-	-	34. 68.32.32	2"	2"	46	66	25	25	65	70	

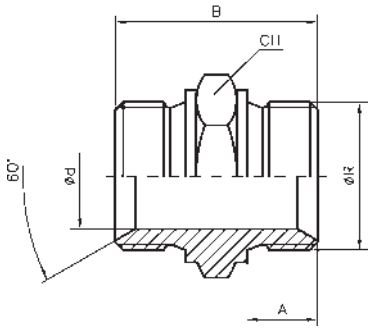

MALE NIPPLE STRAIGHT COUPLING
BSP PARALLEL THREAD
BSP 直外螺纹直通

Ø 钢管外径		订货型号	Ø R BSPP	Ø d	B	A	CH	PN	
公制	英制								
-	-	34. 69.02.02	1/8	4	26.5	9	14	350	
-	-	34. 69.04.04	1/4	6	32	11	19	350	
-	-	34. 69.06.06	3/8	8	35	12	22	350	
-	-	34. 69.08.08	1/2	11	40.5	14	27	200	
-	-	34. 69.10.10	5/8	14	44.5	16	30	200	
-	-	34. 69.12.12	3/4	17	45.5	16	32	200	
-	-	34. 69.16.16	1”	23	52.5	19	41	120	
-	-	34. 69.20.20	1” 1/4	30	57.5	20	50	105	
-	-	34. 69.24.24	1” 1/2	35	61.5	22	55	105	
-	-	34. 69.32.32	2"	46	68.5	25	70	70	

TIPO "A"
TYPE "A"
TYP "A"

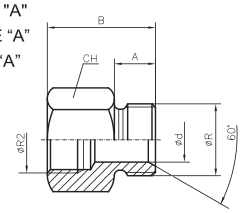

TIPO "B"
TYPE "B"
TYP "B"

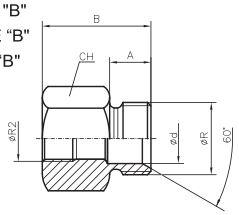

STUD ADAPTORS BSPP
CONED 60°
英管外螺纹 60° 内锥面 / 英管内螺纹

Ø 钢管外径		订货型号	Ø R BSPP	Ø R2 BSPP	Ø d	B	A	CH	PN	Tipo Type Typ	
公制	英制										
-	-	34. 73.06.04	3/8	1/4	8	37	12	22	350	B	
-	-	34. 73.08.04	1/2	1/4	11	38	14	27	200	A	
-	-	34. 73.08.06	1/2	3/8	11	45	14	30	200	B	
-	-	34. 73.12.06	3/4	3/8	17	41.5	16	32	200	A	
-	-	34. 73.12.08	3/4	1/2	17	47	16	32	200	B	
-	-	34. 73.16.04	1"	1/4	23	43	19	41	120	A	
-	-	34. 73.16.06	1"	3/8	23	44.5	19	41	120	A	
-	-	34. 73.16.08	1"	1/2	23	50	19	41	120	A	
-	-	34. 73.16.12	1"	3/4	23	52	19	41	120	B	

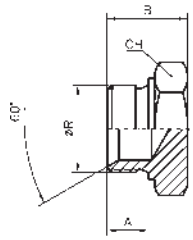

MALE PLUG
外螺纹堵头

Ø 钢管外径		订货型号	Ø R BSPP	B	A	CH	PN	
公制	英制							
-	-	34. 75.00.02	1/8	14.5	9	14	350	
-	-	34. 75.00.04	1/4	19	11	19	350	
-	-	34. 75.00.06	3/8	20.5	12	22	350	
-	-	34. 75.00.08	1/2	24	14	27	200	
-	-	34. 75.00.10	5/8	26	16	30	200	
-	-	34. 75.00.12	3/4	26.5	16	32	200	
-	-	34. 75.00.16	1"	30.5	19	41	120	
-	-	34. 75.00.20	1" 1/4	39	20	50	105	
-	-	34. 75.00.24	1" 1/2	43	22	55	105	
-	-	34. 75.00.32	2"	48.5	25	70	70	

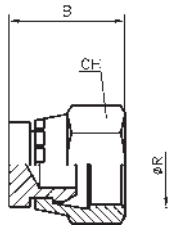

FEMALE PLUG
英制内螺纹 60° 外锥堵头

Ø 钢管外径		订货型号	Ø R BSPP	B	CH	PN	
公制	英制						
-	-	34. 76.00.02	1/8	19.6	14	350	
-	-	34. 76.00.04	1/4	20.7	19	350	
-	-	34. 76.00.06	3/8	24.3	22	350	
-	-	34. 76.00.08	1/2	26.4	27	200	
-	-	34. 76.00.10	5/8	28.5	28 1)	200	
-	-	34. 76.00.12	3/4	30.5	32	200	
-	-	34. 76.00.16	1"	34.5	38 2)	120	
-	-	34. 76.00.20	1" 1/4	42.5	50	105	
		34. 76.00.24	1" 1/2	45	55	105	

1) AISI 316L CH = 30 2) AISI 316L CH = 41

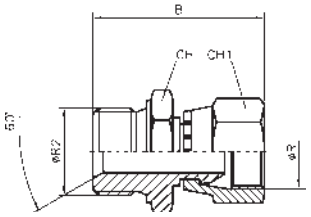

STRAIGHT ADAPTER MALE BSPP CONED 60°
FEMALE CAP SURFACE 60°
BSPP 外螺纹 60° 锥面密封 / 英制内螺纹 60° 内锥面直通

Ø 钢管外径		订货型号	Ø R BSPP	Ø R2 BSPP	B	CH1	CH	PN	
公制	英制								
-	-	600.01.02.02	1/8	1/8	33	14	14	350	
-	-	600.01.04.04	1/4	1/4	36	19	19	350	
-	-	600.01.06.06	3/8	3/8	41	22	22	350	
-	-	600.01.08.08	1/2	1/2	46	27	27	200	
-	-	600.01.10.10	5/8	5/8	50	28 1)	30	200	
-	-	600.01.12.12	3/4	3/4	52	32	32	200	
-	-	600.01.16.16	1"	1"	60	38/41	41	120	
-	-	600.01.20.20	1" 1/4	1" 1/4	69	50	50	105	
-	-	600.01.24.24	1" 1/2	1" 1/2	75	55	55	70	

1) AISI 316L CH = 30

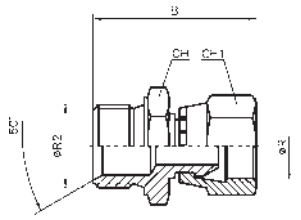

REDUCED STRAIGHT ADAPTER MALE BSPP CONED 60°
FEMALE CAP SURFACE 60°
变径 BSPP 外螺纹 60° 锥面密封 / 英制内螺纹 60° 内锥面直通

Ø 钢管外径		订货型号	Ø R2 BSPP	Ø R BSPP	B	CH1	CH	PN	
公制	英制								
-	-	600.02.04.06	1/4	3/8	39.5	22	22	350	
-	-	600.02.06.04	3/8	1/4	38	19	22	350	
-	-	600.02.06.08	3/8	1/2	43	27	27	200	
-	-	600.02.08.04	1/2	1/4	41	19	27	200	
-	-	600.02.08.06	1/2	3/8	44	22	27	200	
-	-	600.02.08.12	1/2	3/4	49	32	32	200	
-	-	600.02.12.08	3/4	1/2	49	27	32	200	
-	-	600.02.16.12	1"	3/4	56	32	41	120	

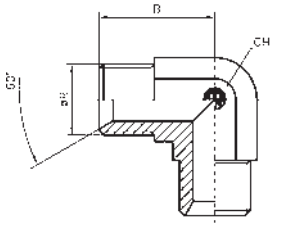

BODY: ELBOW COUPLING 90°
接头体：英管外螺纹 60° 内锥面角通

Ø 钢管外径		订货型号	Ø R BSPP	B	CH	PN	
公制 .	英制						
-	-	60. 01.02.02	1/8	21 1)	11 1)	350	
-	-	60. 01.04.04	1/4	27	14	350	
-	-	60. 01.06.06	3/8	29	19	350	
-	-	60. 01.08.08	1/2	35	22	200	
-	-	60. 01.10.10	5/8	38	27	200	
-	-	60. 01.12.12	3/4	43	27	200	
-	-	60. 01.16.16	1"	45.5	33	120	
-	-	60. 01.20.20	1" 1/4	52	41	105	
-	-	60. 01.24.24	1" 1/2	59	48	105	

1) AISI 316L CH = 14. B = 25

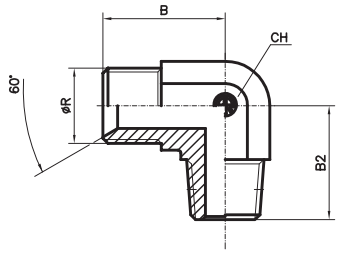

BODY: ELBOW COUPLING 90° BSPP/BSPT

接头体： 英管外螺纹 60° 内锥面密封 / 英锥管外螺纹角通

Ø 钢管外径		订货型号	Ø R BSPP	Ø R2 BSPT	B	B2	CH	PN	
公制	英制								
-	-	60. 02.02.02	1/8	1/8	21	19.8	11 1)	350	
-	-	60. 02.04.04	1/4	1/4	27	27.7	14	350	
-	-	60. 02.06.06	3/8	3/8	29	31	19	350	
-	-	60. 02.08.08	1/2	1/2	35	37.3	22	200	
-	-	60. 02.10.10	5/8	5/8	38	40	27	200	
-	-	60. 02.12.12	3/4	3/4	43	42	27	200	
-	-	60. 02.16.16	1"	1"	50	50	33	120	
-	-	60. 02.20.20	1" 1/4	1" 1/4	55	59.6	41	105	
-	-	60. 02.24.24	1" 1/2	1" 1/2	60	67.1	48	105	

1) AISI 316L CH = 14. B = 25. B2 = 25

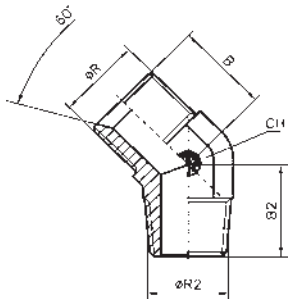

ELBOW MALE COUPLING 45°

BSPP - BSPT

英管外螺纹 60° 内锥面密封 / 英锥管外螺纹 45° 角通

Ø 钢管外径		订货型号	Ø R BSPP	Ø R2 BSPT	B	B2	CH	PN	
公制	英制								
-	-	60. 03.04.04	1/4	1/4	22	21.8	14 1)	350	
-	-	60. 03.06.06	3/8	3/8	23.5	24.1	19	350	
-	-	60. 03.08.08	1/2	1/2	28.5	29.7	22	200	
-	-	60. 03.12.12	3/4	3/4	31.5	30.5	27	200	
-	-	60. 03.16.16	1"	1"	37	37.6	33	120	

1) AISI 316L CH = 19

BODY: 45° MALE-MALE O.RING ADJUSTABLE ADAPTOR

接头体：英管外螺纹 60° 内锥面密封 / 英管外螺纹带 O 型圈可调向 45° 角通

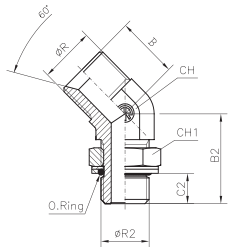

Ø 钢管外径		订货型号	Ø R BSPP	Ø R2 BSPP	B	B2	C2	CH	CH1	PN
公制	英制									
-	-	60.04.02.02	1/8	1/8	20	26	6.3	14	14	350
-	-	60.04.04.02	1/4	1/8	22	27	6.3	14	14	350
-	-	60.04.04.04	1/4	1/4	22	29	9.5	14	19	350
-	-	60.04.06.04	3/8	1/4	23.5	29.5	9.5	19	19	350
-	-	60.04.06.06	3/8	3/8	23.5	33	9.5	19	22	350
-	-	60.04.06.08	3/8	1/2	28.5	38.5	13.0	22	27	200
-	-	60.04.08.06	1/2	3/8	28.5	34.5	9.5	22	22	200
-	-	60.04.08.08	1/2	1/2	28.5	38.5	13.0	22	27	200
-	-	60.04.12.08	3/4	1/2	31.5	40	13.0	27	27	200
-	-	60.04.12.12	3/4	3/4	31.5	44	13.0	27	36	200
-	-	60.04.16.12	1"	3/4	37	47.5	13.0	33	36	120
-	-	60.04.16.16	1"	1"	37	47.5	16.0	33	41	120
-	-	60.04.20.16	1"1/4	1"	39	48.5	16.0	41	41	105
-	-	60.04.20.20	1"1/4	1"1/4	39	48.5	16.0	41	50	105
-	-	60.04.24.20	1"1/2	1"1/4	46	48.5	16.0	48	50	105
-	-	60.04.24.24	1"1/2	1"1/2	46	48.5	16.0	48	55	105

BODY: 90° MALE-MALE O.RING ADJUSTABLE ADAPTOR

接头体：英管外螺纹 60° 内锥面密封 / 英管外螺纹带 O 型圈可调向直角通

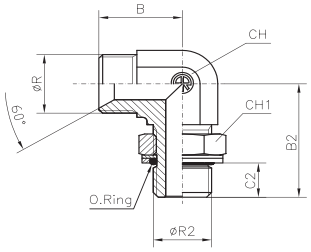

Ø 钢管外径		订货型号	Ø R BSPP	Ø R2 BSPP	B	B2	C2	CH	CH1	PN
公制	英制									
-	-	60.05.02.02	1/8	1/8	211)	261)	6.3	111)	14	350
-	-	60.05.04.02	1/4	1/8	27	30	6.3	14	14	350
-	-	60.05.04.04	1/4	1/4	27	32	9.5	14	19	350
-	-	60.05.06.04	3/8	1/4	29	33.5	9.5	19	19	350
-	-	60.05.06.06	3/8	3/8	29	37	9.5	19	22	350
-	-	60.05.06.08	3/8	1/2	35	43	13.0	22	27	200
-	-	60.05.08.06	1/2	3/8	35	39.5	9.5	22	22	200
-	-	60.05.08.08	1/2	1/2	35	43	13.0	22	27	200
-	-	60.05.12.08	3/4	1/2	43	45.5	13.0	27	27	200
-	-	60.05.12.12	3/4	3/4	43	49.5	13.0	27	36	200
-	-	60.05.16.12	1"	3/4	45.5	50.5	13.0	33	36	120
-	-	60.05.16.16	1"	1"	45.5	52.5	16.0	33	41	120
-	-	60.05.20.16	1"1/4	1"	52	57	16.0	41	41	105
-	-	60.05.20.20	1"1/4	1"1/4	52	57	16.0	41	50	105
-	-	60.05.24.20	1"1/2	1"1/4	59	60.5	16.0	48	50	105
-	-	60.05.24.24	1" 1/2	1"1/2	59	60.5	16.0	48	55	105

1) AISI 316L CH = 14 B= 25 B2= 29

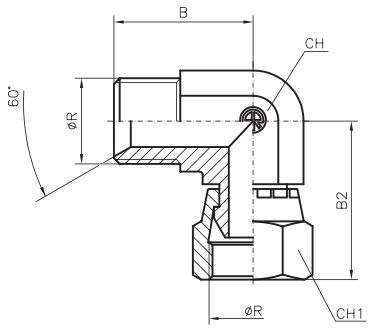

BODY: ELBOW COUPLING 90° WITH ROTARY NUT

接头体：英管外螺纹 60° 内锥面密封 / 英制内螺纹 60° 外锥面密封直角通

Ø 钢管外径		订货型号	Ø R BSPP	B	B2	CH	CH1	PN	
公制	英制								
-	-	60. 09.02.02	1/8	17 2)	22 2)	11 2)	14	350	
-	-	60. 09.04.04	1/4	27	26	14	19	350	
-	-	60. 09.06.06	3/8	29	31	19	22	350	
-	-	60. 09.08.08	1/2	35	36	22	27	200	
-	-	60. 09.10.10	5/8	38	40	27	30	200	
-	-	60. 09.12.12	3/4	43	40	27	32	200	
-	-	60. 09.16.16	1"	45.5	53	33	38 1)	120	
-	-	60. 09.20.20	1" 1/4	52	57	41	50	105	
-	-	60. 09.24.24	1" 1/2	59	65.5	48	55	105	

1) AISI 316L CH = 41
2) AISI 316L CH = 14 B = 25 B2 = 28.5

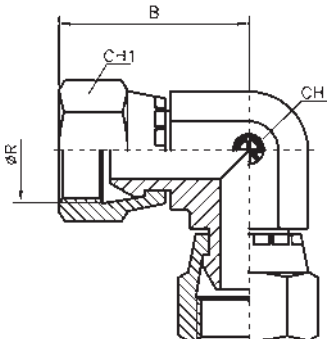

ELBOW COUPLING 90° WITH ROTARY NUT

直角内螺纹 60° 外锥密封

Ø 钢管外径		订货型号	Ø R BSPP	B	CH	CH1	PN	
公制	英制							
-	-	60. 10.02.02	1/8	22 2)	11 2)	14	350	
-	-	60. 10.04.04	1/4	27.2	14	19	350	
-	-	60. 10.06.06	3/8	32.3	19	22	350	
-	-	60. 10.08.08	1/2	36.4	22	27	200	
-	-	60. 10.10.10	5/8	39	27	30	200	
-	-	60. 10.12.12	3/4	42.5	27	32	200	
-	-	60. 10.16.16	1"	53	33	38 1)	120	
-	-	60. 10.20.20	1" 1/4	58	41	50	105	
-	-	60. 10.24.24	1" 1/2	68.5	48	55	105	

1) AISI 316L CH = 41
2) AISI 316L CH = 14 B = 28.5

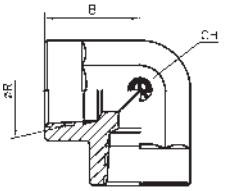

ELBOW FEMALE COUPLING 90° NPT
布锥管内螺纹直角通

Ø 钢管外径		订货型号	Ø R NPT	B	CH	PN	
公制	英制						
-	-	60. 14.02.02	1/8	16.8	14	350	
-	-	60. 14.04.04	1/4	22.4	19	350	
-	-	60. 14.06.06	3/8	25.9	22	315	
-	-	60. 14.08.08	1/2	31.2	27	210	
-	-	60. 14.12.12	3/4	34.5	33	210	
-	-	60. 14.16.16	1”	41.4	41	120	
-	-	60. 14.20.20	1” 1/4	43.2	48	105	
-	-	60. 14.24.24	1” 1/2	62	64	105	

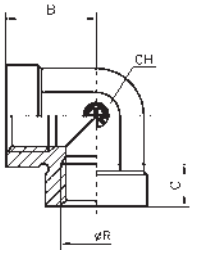

ELBOW FEMALE COUPLING 90° BSPP
英管内螺纹直角通

Ø 钢管外径		订货型号	Ø R BSPP	B	C	CH	PN	
公制	英制							
-	-	60. 15.02.02	1/8	16.8	10	14	350	
-	-	60. 15.04.04	1/4	23	13	19	350	
-	-	60. 15.06.06	3/8	26	13	22	315	
-	-	60. 15.08.08	1/2	31	15	27	210	
-	-	60. 15.12.12	3/4	36	17	33	210	
-	-	60. 15.16.16	1”	42.5	20	41	120	
-	-	60. 15.20.20	1” 1/4	47	22	48	105	
-	-	60. 15.24.24	1” 1/2	62	24	64	105	

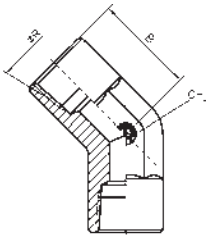

ELBOW FEMALE COUPLING 45° NPT
布锥管内螺纹 45° 角通

Ø 钢管外径		订货型号	Ø R NPT	B	CH	PN	
公制 .	英制						
-	-	60. 16.04.04	1/4	17.5	19	350	
-	-	60. 16.06.06	3/8	19	22	315	
-	-	60. 16.08.08	1/2	23.9	27	210	
-	-	60. 16.12.12	3/4	25.4	33	210	
-	-	60. 16.16.16	1”	30.2	41	120	

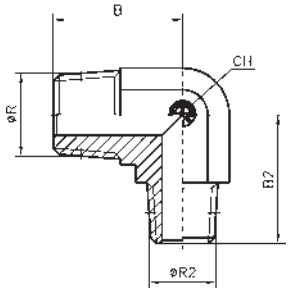

REDUCED ELBOW MALE COUPLING 90° BSPT
变径英锥管外螺纹直角通

Ø 钢管外径		订货型号	Ø R BSPT	Ø R2 BSPT	B	B2	CH	PN	
公制	英制								
-	-	60. 19.06.04	3/8	1/4	31	31	19	420	
-	-	60. 19.08.06	1/2	3/8	37.3	32.5	22	420	
-	-	60. 19.12.08	3/4	1/2	40.4	40.4	27	280	

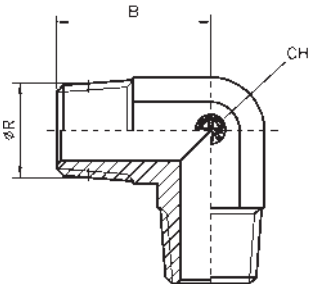

MALE COUPLING 90° BSPT
英锥管外螺纹直角通

Ø 钢管外径		订货型号	Ø R B SPT	B	CH	PN	
公制	英制						
-	-	60. 20.02.02	1/8	19.8 1)	11 1)	420	
-	-	60. 20.04.04	1/4	27.7	14	420	
-	-	60. 20.06.06	3/8	31	19	420	
-	-	60. 20.08.08	1/2	37.3	22	420	
-	-	60. 20.12.12	3/4	40.4	27	280	
-	-	60. 20.16.16	1”	50	33	210	
-	-	60. 20.20.20	1” 1/4	59.6	41	210	
-	-	60. 20.24.24	1” 1/2	67.1	48	210	

1) AISI 316L CH = 14 B = 23.5

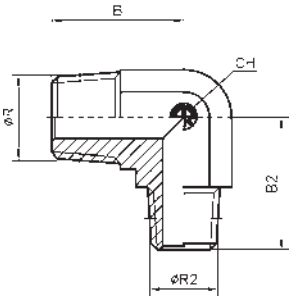

REDUCED ELBOW MALE COUPLING 90° NPT
变径布锥管外螺纹直角通

Ø 钢管外径		订货型号	Ø R NPT	Ø R2 NPT	B	B2	CH	PN	
公制	英制								
-	-	60. 21.06.04	3/8	1/4	31	31	19	420	
-	-	60. 21.08.06	1/2	3/8	37.3	32.5	22	420	
-	-	60. 21.12.08	3/4	1/2	40.4	40.4	27	280	

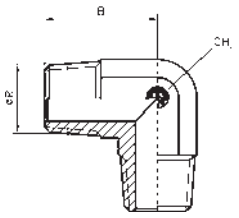

MALE COUPLING 90° NPT
布锥管外螺纹直角通

Ø 钢管外径		订货型号	Ø R NPT	B	CH	PN	
公制	英制						
-	-	60. 22.02.02	1/8	19.8 1)	11 1)	420	
-	-	60. 22.04.04	1/4	27.7	14	420	
-	-	60. 22.06.06	3/8	31	19	420	
-	-	60. 22.08.08	1/2	37.3	22	420	
-	-	60. 22.12.12	3/4	40.4	27	280	
-	-	60. 22.16.16	1"	50	33	210	
-	-	60. 22.20.20	1" 1/4	59.6	41	210	
-	-	60. 22.24.24	1" 1/2	67.1	48	210.	

1) AISI 316L CH = 14 B = 23.5

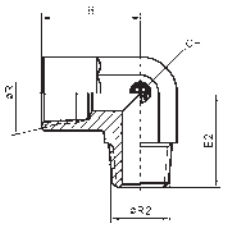

REDUCED ELBOW MALE
FEMALE 90° NPT
变径布锥管内螺纹 / 布锥外螺纹直角通

Ø 钢管外径		订货型号	Ø R NPT	Ø R2 NPT	B	B2	CH	PN	
公制	英制								
-	-	60. 25.02.04	1/8	1/4	16.8	27.7	14	350	
-	-	60. 25.04.06	1/4	3/8	22.4	31	19	350	
-	-	60. 25.06.08	3/8	1/2	31.7	37.3	22	210	
-	-	60. 25.08.06	1/2	3/8	31.2	32.5	27	210	
-	-	60. 25.08.12	1/2	3/4	31.2	40.4	27	210	
-	-	60. 25.12.08	3/4	1/2	34.5	40.4	33	210	

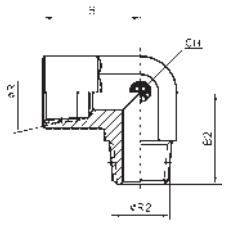

ELBOW MALE
FEMALE 90° NPT
布锥管内螺纹 / 布锥管外螺纹直角通

Ø 钢管外径		订货型号	Ø R NPT	Ø R2 NPT	B	B2	CH	PN	
公制	英制								
–	-	60. 26.02.02	1/8	1/8	16.8	19.8	14	350	
–	-	60. 26.04.04	1/4	1/4	22.4	27.7	19	350	
–	-	60. 26.06.06	3/8	3/8	25.9	31	22	315	
–	-	60. 26.08.08	1/2	1/2	31.2	37.3	27	210	
–	-	60. 26.12.12	3/4	3/4	34.5	40.4	33	210	
–	-	60. 26.16.16	1"	1"	41.4	50	41	120	
–	-	60. 26.20.20	1" 1/4	1" 1/4	43.2	60.5	48	105	
–	-	60. 26.24.24	1" 1/2	1" 1/2	62	67.1	64	105	

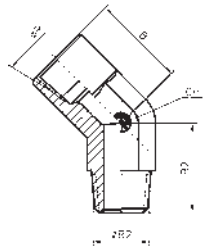

ELBOW MALE
FEMALE 45° NPT
布锥管内螺纹 / 布锥管外螺纹 45° 角通

Ø 钢管外径		订货型号	Ø R NPT	Ø R2 NPT	B	B2	CH	PN	
公制	英制								
-	-	60. 27.02.02	1/8	1/8	11.9 1)	18.3	14 1)	350	
-	-	60. 27.04.04	1/4	1/4	15.7	26.7	19	350	
-	-	60. 27.06.06	3/8	3/8	18.3	26.9	22	315	
-	-	60. 27.08.08	1/2	1/2	23.1	34	27	210	
-	-	60. 27.12.12	3/4	3/4	24.6	35.1	33	210	
-	-	60. 27.16.16	1"	1"	28.4	43.7	41	120	

1) AISI 316L CH = 19 B = 13.4

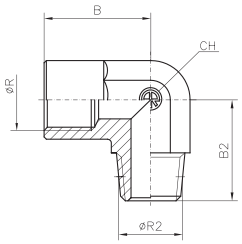

REDUCED ELBOW MALE BSPT
FEMALE BSPP 90°
变径 英管内螺纹 / 英锥外螺纹直角通

Ø 钢管外径		订货型号	Ø R BSPP	Ø R2 BSPT	B	B2	CH	PN	
公制	英制								
-	-	60. 35.02.04	1/8	1/4	16.8	27.7	14	350	
-	-	60. 35.04.06	1/4	3/8	22.4	31	19	350	
-	-	60. 35.06.08	3/8	1/2	31.7	37.3	22	210	
-	-	60. 35.08.06	1/2	3/8	31.2	32.5	27	210	
-	-	60. 35.08.12	1/2	3/4	31.2	40.4	27	210	
-	-	60. 35.12.08	3/4	1/2	34.5	40.4	33	210	

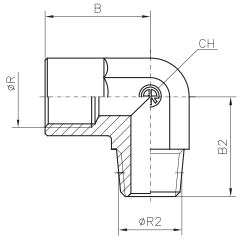

ELBOW MALE BSPT
FEMALE BSPP 90°
英管内螺纹 / 英锥管外螺纹直角通

Ø 钢管外径		订货型号	Ø R BSPP	Ø R2 BSPT	B	B2	CH	PN	
公制	英制								
-	-	60. 36.02.02	1/8	1/8	16.8	19.8	14	350	
-	-	60. 36.04.04	1/4	1/4	22.4	27.7	19	350	
-	-	60. 36.06.06	3/8	3/8	25.9	31	22	315	
-	-	60. 36.08.08	1/2	1/2	31.2	37.3	27	210	
-	-	60. 36.12.12	3/4	3/4	34.5	40.4	33	210	
-	-	60. 36.16.16	1"	1"	41.4	50	41	120	
-	-	60. 36.20.20	1" 1/4	1" 1/4	43.2	60.5	48	105	
-	-	60. 36.24.24	1" 1/2	1" 1/2	62	67.1	64	105	

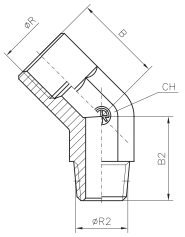

ELBOW MALE BSPT FEMALE BSPP 45°
英管内螺纹 / 英锥管外螺纹 45° 角通

Ø 钢管外径		订货型号	Ø R BSPP	Ø R2 BSPT	B	B2	CH	PN	
公制	英制								
-	-	60. 37.02.02	1/8	1/8	11.9 1)	18.3	14 1)	350	
-	-	60. 37.04.04	1/4	1/4	15.7	26.7	19	350	
-	-	60. 37.06.06	3/8	3/8	18.3	26.9	22	315	
-	-	60. 37.08.08	1/2	1/2	23.1	34	27	210	
-	-	60. 37.12.12	3/4	3/4	24.6	35.1	33	210	
-	-	60. 37.16.16	1"	1"	28.4	43.7	41	120	
-	-	60. 37.20.20	1"1/4	1"1/4	34.5	45.2	48	105	
-	-	60. 37.24.24	1"1/2	1"1/2	42.2	52.7	64	105	

1) AISI 316L CH = 19 B = 13.4

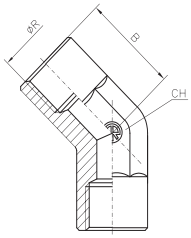

ELBOW FEMALE COUPLING 45° BSPP
英管内螺纹 45° 角通

Ø 钢管外径		订货型号	Ø R BSPP	B	CH	PN	
公制	英制						
-	-	60. 38.02.02	1/8	11.9 1)	14 1)	350	
-	-	60. 38.04.04	1/4	17.5	19	350	
-	-	60. 38.06.06	3/8	19	22	315	
-	-	60. 38.08.08	1/2	23.9	27	210	
-	-	60. 38.12.12	3/4	25.4	33	210	
-	-	60. 38.16.16	1"	30.2	41	120	
-	-	60. 38.20.20	1"1/4	37.2	48	105	
-	-	60. 38.24.24	1"1/2	42.2	64	105	

1) AISI 316L CH = 19 B = 13.4

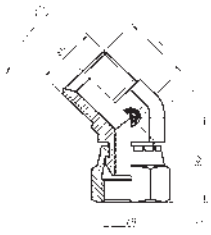

BODY: ELBOW COUPLING 45°
WITH ROTARY NUT
接头体：英管内螺纹 60° 外锥 45° 角通

Ø 钢管外径		订货型号	Ø R BSPP	B	B2	CH	CH1	PN	
公制	英制								
-	-	60. 39.02.02	1/8	22	26	14 2)	14	350	
-	-	60. 39.04.04	1/4	22	26	14 2)	19	350	
-	-	60. 39.06.06	3/8	23.5	30	19	22	350	
-	-	60. 39.08.08	1/2	28.5	34	22	27	200	
-	-	60. 39.10.10	5/8	29	41	27	28	200	
-	-	60. 39.12.12	3/4	31.5	42	27	32	200	
-	-	60. 39.16.16	1"	37	47	33	38 1)	120	
-	-	60. 39.20.20	1"1/4	39	51	41	50	105	
-	-	60. 39.24.24	1"1/2	46	60	48	55	105	

1) AISI 316L CH = 41 2) AISI 316L CH = 19

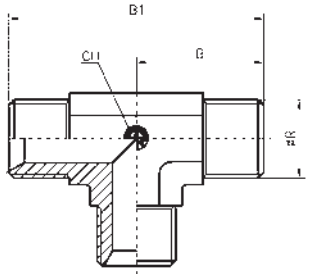

EQUAL TEES
等径三通

Ø 钢管外径		订货型号	Ø R BSPP	B	B1	CH	PN	
公制	英制							
-	-	60. 51.02.02	1/8	17 1)	34 1)	11 1)	350	
-	-	60. 51.04.04	1/4	27	54	14	350	
-	-	60. 51.06.06	3/8	29	58	19	350	
-	-	60. 51.08.08	1/2	35	70	22	200	
-	-	60. 51.10.10	5/8	38	76	27	200	
-	-	60. 51.12.12	3/4	43	86	27	200	
-	-	60. 51.16.16	1"	45.5 2)	91 2)	33 2)	120	
-	-	60. 51.20.20	1"1/4	52 3)	104 3)	41	105	
-	-	60. 51.24.24	1"1/2	59 4)	118 4)	48 4)	105	

1) AISI 316L CH = 14 B = 27 B1 = 54
2) AISI 316L CH = 36 B = 48 B1 = 96
3) AISI 316L B = 53.5 B1 = 107
4) AISI 316L CH = 50 B = 62.5 B1 = 125

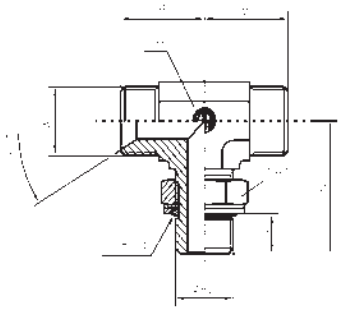

BODY: "T" MALE-MALE O.RING ADJUSTABLE ADAPTOR
接头体：T 型带 O 型圈可调式三通

Ø 钢管外径		订货型号	Ø R BSPP	Ø R2 BSPP	B	B2	C2	CH	CH1	PN
公制	英制									
-	-	60.53.02.02	1/8	1/8	21 1)	26 1)	6.3	11 1)	14	350
-	-	60.53.04.02	1/4	1/8	27	30	6.3	14	14	350
-	-	60.53.04.04	1/4	1/4	27	32	9.5	14	19	350
-	-	60.53.06.04	3/8	1/4	29	33.5	9.5	19	19	350
-	-	60.53.06.06	3/8	3/8	29	37	9.5	19	22	350
-	-	60.53.06.08	3/8	1/2	35	43	13.0	22	27	200
-	-	60.53.08.06	1/2	3/8	35	39.5	9.5	22	22	200
-	-	60.53.08.08	1/2	1/2	35	43	13.0	22	27	200
-	-	60.53.12.08	3/4	1/2	43	45.5	13.0	27	27	200
-	-	60.53.12.12	3/4	3/4	43	49.5	13.0	27	36	200
-	-	60.53.16.12	1"	3/4	45.5	50.5	13.0	33	36	120
-	-	60.53.16.16	1"	1"	45.5	52.5	16.0	33	41	120
-	-	60.53.20.16	1"1/4	1"	52	57	16.0	41	41	105
-	-	60.53.20.20	1"1/4	1"1/4	52	57	16.0	41	50	105
-	-	60.53.24.20	1"1/2	1"1/4	59	60.5	16.0	48	50	105
-	-	60.53.24.24	1" 1/2	1"1/2	59	60.5	16.0	48	55	105

1) AISI 316L CH = 14 B= 25 B2= 29

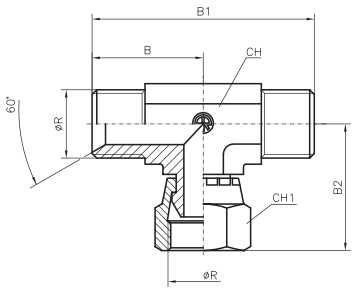

"T" OF LINE WITH ROTARY NUT
T 型可转旋三通

Ø 钢管外径		订货型号	Ø R BSPP	B	B1	B2	CH	CH1	PN
公制	英制								
-	-	60. 55.02.02	1/8	22 1)	44 1)	22	11 1)	14	350
-	-	60. 55.04.04	1/4	27	54	26	14	19	350
-	-	60. 55.06.06	3/8	29	58	31	19	22	350
-	-	60. 55.08.08	1/2	35	70	36	22	27	200
-	-	60. 55.10.10	5/8	38	76	40	27	28/30 2)	200
-	-	60. 55.12.12	3/4	43	86	40	27	32	200
-	-	60. 55.16.16	1"	45.5 3)	91 3)	53	33 3)	38	120
-	-	60. 55.20.20	1"1/4	52 4)	104 4)	58	41	50	105
-	-	60. 55.24.24	1"1/2	59 5)	118 5)	68.5	48 5)	55	105

1) AISI 316L CH = 14 B = 27 B1 = 54
2) AISI 316L CH = 30
3) AISI 316L CH = 36 B = 48 B1 = 96
4) AISI 316L B = 53.5 B1 = 107
5) AISI 316L CH = 50 B = 62.5 B1 = 125

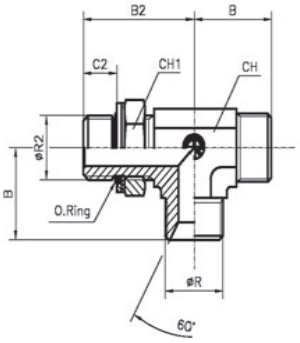

BODY: "L" MALE-MALE O.RING ADJUSTABLE ADAPTOR
接头体：L 型带 O 形圈可调式三通

Ø 钢管外径		订货型号	Ø R BSPP	Ø R2 BSPP	B	B2	C2	CH	CH1	PN
公制	英制									
-	-	60.57.02.02	1/8	1/8	21 1)	26 1)	6.3	11 1)	14	350
-	-	60.57.04.02	1/4	1/8	27	30	6.3	14	14	350
-	-	60.57.04.04	1/4	1/4	27	32	9.5	14	19	350
-	-	60.57.06.04	3/8	1/4	29	33.5	9.5	19	19	350
-	-	60.57.06.06	3/8	3/8	29	37	9.5	19	22	350
-	-	60.57.06.08	3/8	1/2	35	43	13.0	22	27	200
-	-	60.57.08.06	1/2	3/8	35	39.5	9.5	22	22	200
-	-	60.57.08.08	1/2	1/2	35	43	13.0	22	27	200
-	-	60.57.12.08	3/4	1/2	43	45.5	13.0	27	27	200
-	-	60.57.12.12	3/4	3/4	43	49.5	13.0	27	36	200
-	-	60.57.16.12	1"	3/4	45.5	50.5	13.0	33	36	120
-	-	60.57.16.16	1"	1"	45.5	52.5	16.0	33	41	120
-	-	60.57.20.16	1"1/4	1"	52	57	16.0	41	41	105
-	-	60.57.20.20	1"1/4	1"1/4	52	57	16.0	41	50	105
-	-	60.57.24.20	1"1/2	1"1/4	59	60.5	16.0	48	50	105
-	-	60.57.24.24	1"1/2	1"1/2	59	60.5	16.0	48	55	105

1) AISI 316L CH = 14 B= 25 B2= 29

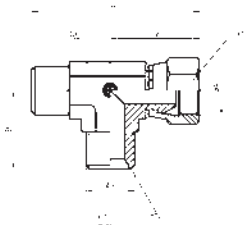

DERIVATING "T" WITH ROTARY NUT
T 型可转旋三通

Ø 钢管外径		订货型号	Ø R BSPP	B	B1	B2	CH	CH1	PN
公制	英制								
-	-	60. 59.02.02	1/8	17 1)	39 1)	22	11 1)	14	350
-	-	60. 59.04.04	1/4	27	53	26	14	19	350
-	-	60. 59.06.06	3/8	29	60	31	19	22	350
-	-	60. 59.08.08	1/2	35	71	36	22	27	200
-	-	60. 59.10.10	5/8	38	76	40	27	28/30 2)	200
-	-	60. 59.12.12	3/4	43	83	40	27	32	200
-	-	60. 59.16.16	1"	45.5 3)	98.5 3)	53	33 3)	38	120
-	-	60. 59.20.20	1" 1/4	52 4)	110 4)	58	41	50	105
-	-	60. 59.24.24	1" 1/2	59 5)	127.5 5)	68.5	48 5)	55	105

1) AISI 316L CH = 14 B = 27 B1 = 54 2) AISI 316L CH = 30
3) AISI 316L CH = 36 B = 48 B1 = 101
4) AISI 316L B = 53.5 B1 = 111.5
5) AISI 316L CH = 50 B = 62.5 B1 = 131

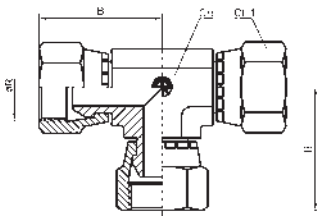

EQUAL TEES WITH ROTARY NUT
等径内螺纹扣压式三通

Ø 钢管外径		订货型号	Ø R BSPP	B	CH	CH1	PN	
公制	英制							
-	-	60. 60.02.02	1/8	22	11 1)	14	350	
-	-	60. 60.04.04	1/4	27.2	14	19	350	
-	-	60. 60.06.06	3/8	32.3	19	22	350	
-	-	60. 60.08.08	1/2	36.4	22	27	200	
-	-	60. 60.10.10	5/8	38	27	28 2)	200	
-	-	60. 60.12.12	3/4	42.5	27	32	200	
-	-	60. 60.16.16	1"	53	33 3)	38	120	
-	-	60. 60.20.20	1"1/4	58	41	50	105	
-	-	60. 60.24.24	1"1/2	68.5	48 4)	55	105	

1) AISI 316L CH = 14 2) AISI 316L CH = 30
3) AISI 316L CH = 36 4) AISI 316L CH = 50

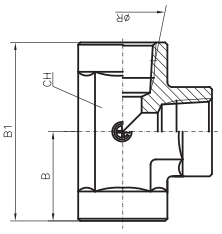

FEMALE "T" NPT
T 型布锥内螺纹三通

Ø 钢管外径		订货型号	Ø R NPT	B	B1	CH	PN	
公制	英制							
-	-	60. 64.02.02	1/8	16.8	33.6	14	350	
-	-	60. 64.04.04	1/4	22.4	44.8	19	350	
-	-	60. 64.06.06	3/8	25.9	51.8	22	315	
-	-	60. 64.08.08	1/2	31.2	62.4	27	210	
-	-	60. 64.12.12	3/4	34.5	69	33	210	
-	-	60. 64.16.16	1"	41.4	82.8	41	120	
-	-	60. 64.20.20	1"1/4	43.2	86.4	48	105	
-	-	60. 64.24.24	1"1/2	62	105.6	64	105	

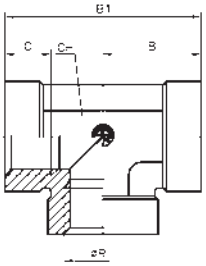

FEMALE "T" BSPP
T 型英制直螺纹三通

Ø 钢管外径		订货型号	Ø R BSPP	B	B1	C	CH	PN	
公制	英制								
-	-	60. 65.02.02	1/8	16.8	33.6	9	14	350	
-	-	60. 65.04.04	1/4	23	46	13	19	350	
-	-	60. 65.06.06	3/8	26	52	13	22	315	
-	-	60. 65.08.08	1/2	31	62	15	27	210	
-	-	60. 65.12.12	3/4	36	72	17	33	210	
-	-	60. 65.16.16	1"	42.5	85	20	41	120	
-	-	60. 65.20.20	1"1/4	58.5	117	22	48	105	
-	-	60. 65.24.24	1"1/2	62	122	24	64	105	

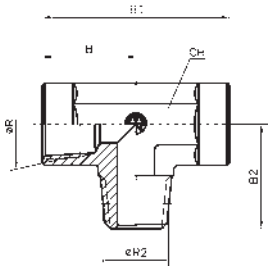

DERIVATING "T" MALE/FEMALE NPT
T 型布锥外螺纹三通

Ø 钢管外径		订货型号	Ø R NPT	Ø R2 NPT	B	B1	B2	CH	PN
公制	英制								
-	-	60. 67.02.02	1/8	1/8	16.8	33.6	19. 8	14	350
-	-	60. 67.04.04	1/4	1/4	22.4	44.8	27. 7	19	350
-	-	60. 67.06.06	3/8	3/8	25.9	51.8	31	22	315
-	-	60. 67.08.08	1/2	1/2	31.2	62.4	37. 3	27	210
-	-	60. 67.12.12	3/4	3/4	34.5	69	40. 4	33	210
-	-	60. 67.16.16	1"	1"	41.4	82.8	50	41	120
-	-	60. 67.20.20	1"1/4	1"1/4	43.2	86.4	60. 5	48	105
-	-	60. 67.24.24	1"1/2	1"1/2	62	124	67. 1	64	105

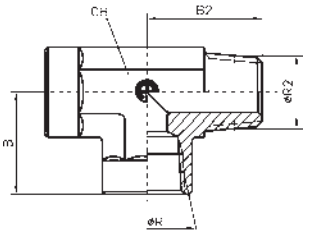

DERIVATING "L" MALE/FEMALE NPT
L 型布锥外螺纹三通

Ø 钢管外径		订货型号	Ø R NPT	Ø R2 NPT	B	B2	CH	PN	
公制	英制								
-	-	60. 68.02.02	1/8	1/8	16.8	19.8	14	350	
-	-	60. 68.04.04	1/4	1/4	22.4	27.7	19	350	
-	-	60. 68.06.06	3/8	3/8	25.9	31	22	315	
-	-	60. 68.08.08	1/2	1/2	31.2	37.3	27	210	
-	-	60. 68.12.12	3/4	3/4	34.5	40.4	33	210	
-	-	60. 68.16.16	1"	1"	41.4	50	41	120	
-	-	60. 68.20.20	1"1/4	1"1/4	43.2	60.5	48	105	
-	-	60. 68.24.24	1"1/2	1"1/2	52.8	67.1	64	105	

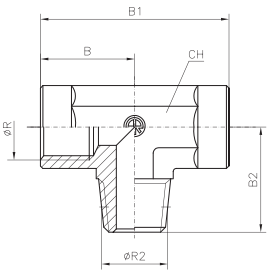

DERIVATING “T” MALE BSPT FEMALE BSPP
T 型英锥管外螺纹三通

Ø 钢管外径		订货型号	Ø R BSPP	Ø R2 BSPT	B	B1	B2	CH	PN
公制	英制								
-	-	60. 77.02.02	1/8	1/8	16.8	33.6	19.8	14	350
-	-	60. 77.04.04	1/4	1/4	22.4	44.8	27.7	19	350
-	-	60. 77.06.06	3/8	3/8	25.9	51.8	31	22	315
-	-	60. 77.08.08	1/2	1/2	31.2	62.4	37.3	27	210
-	-	60. 77.12.12	3/4	3/4	34.5	69	40.4	33	210
-	-	60. 77.16.16	1”	1”	41.4	82.8	50	41	120
-	-	60. 77.20.20	1” 1/4	1” 1/4	58.5	117	59.6	48	105
-	-	60. 77.24.24	1” 1/2	1” 1/2	62	124	67.1	64	105

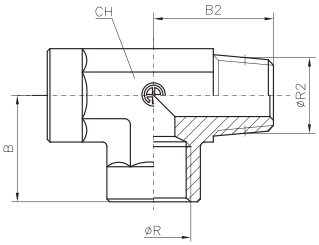

DERIVATING "L" MALE BSPT FEMALE BSPP
L 型英锥管外螺纹三通

Ø 钢管外径		订货型号	Ø R BSPP	Ø R2 BSPT	B	B2	CH	PN	
公制	英制								
-	-	60. 78.02.02	1/8	1/8	16.8	19.8	14	350	
-	-	60. 78.04.04	1/4	1/4	22.4	27.7	19	350	
-	-	60. 78.06.06	3/8	3/8	25.9	31	22	315	
-	-	60. 78.08.08	1/2	1/2	31.2	37.3	27	210	
-	-	60. 78.12.12	3/4	3/4	34.5	40.4	33	210	
-	-	60. 78.16.16	1”	1”	41.4	50	41	120	
-	-	60. 78.20.20	1” 1/4	1” 1/4	43.2	60.5	48	105	
-	-	60. 78.24.24	1” 1/2	1” 1/2	62	67.1	64	105	

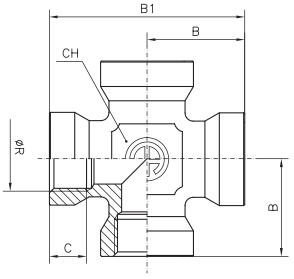

FEMALE CROSS BSPP
内螺纹面通

Ø 钢管外径		订货型号	Ø R BSPP	B	B1	C	CH	PN	
公制	英制								
-	-	60. 99.02.02	1/8	29	58	9	17	350	
-	-	60. 99.04.04	1/4	31	62	13	19	350	
		60. 99.06.06	3/8	33.5	67	13	24	250	
-	-	60. 99.08.08	1/2	38	76	15	27	225	
-	-	60. 99.12.12	3/4	43.5	87	17	36	200	
-	-	60. 99.16.16	1”	50	100	19	41	160	
-	-	60. 99.20.20	1” 1/4	59	118	22	50	160	

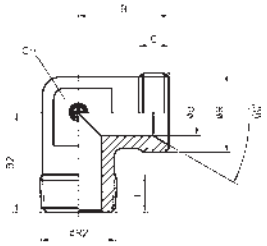

ELBOW COUPLING 90° BSPP/BSPT
英制直外螺纹 / 英锥管外螺纹直角通

Ø 钢管外径		订货型号	Ø R BSPP	Ø R2 BSPT	B	C	F	Ø d	CH	B2	PN
公制	英制										
-	-	TN155 - 1/8	1/8	1/8	21	10.5	13	4	11	19.8	350
-	-	TN155 - 1/4	1/4	1/4	24.5	11.5	14	6	14	27	350
-	-	TN155 - 3/8	3/8	3/8	29	12.5	15.5	9	17	30.5	350
-	-	TN155 - 1/2	1/2	1/2	30.5	13	17.5	11	19	35	200
-	-	TN155 - 3/4	3/4	3/4	37	14	18.5	16	27	42	200
-	-	TN155 - 1"	1"	1"	43.5	17	20	21	36	47.5	120
-	-	TN155 - 1"1/4	1"1/4	1"1/4	50	19	23	26	41	54	105
-	-	TN155 - 1"1/2	1"1/2	1"1/2	58.5	23	23	32	50	62	105

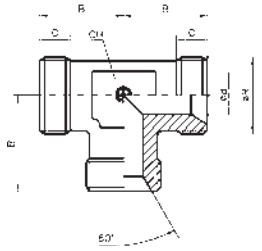

EQUAL TEES
等径三通

Ø 钢管外径		订货型号	Ø R BSPP	B	C	Ø d	CH	PN	
公制	英制								
-	-	TN164 - 1/4	1/4	24.5	11.5	6	14	350	
-	-	TN164 - 3/8	3/8	29	12.5	9	17	350	
-	-	TN164 - 1/2	1/2	30.5	13	11	19	200	
-	-	TN164 - 3/4	3/4	37	14	16	27	200	
-	-	TN164 - 1"	1"	43.5	17	21	36	120	
-	-	TN164 - 1"1/4	1"1/4	50	19	26	41	105	
-	-	TN164 - 1"1/2	1"1/2	58.5	23	32	50	105	

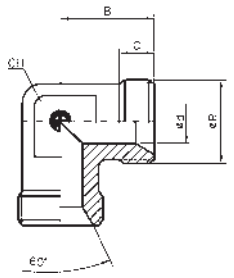

ELBOW COUPLING 90°
等径角通

Ø 钢管外径		订货型号	Ø R BSPP	B	C	Ø d	CH	PN	
公制	英制								
-	-	TN166 - 1/4	1/4	24.5	11.5	6	14	350	
-	-	TN166 - 3/8	3/8	29	12.5	9	17	350	
-	-	TN166 - 1/2	1/2	30.5	13	11	19	200	
-	-	TN166 - 3/4	3/4	37	14	16	27	200	
-	-	TN166 - 1"	1"	43.5	17	21	36	120	
-	-	TN166 - 1"1/4	1"1/4	50	19	26	41	105	
-	-	TN166 - 1"1/2	1"1/2	58.5	23	32	50	105	

CAT. 4Q/E

Member of CISQ Federation
RINA
ISO 9001:2000
Certified Quality System
CERTIFICATO N° 95/94/S

FLEXIBLE TUBE FITTINGS
软管接头

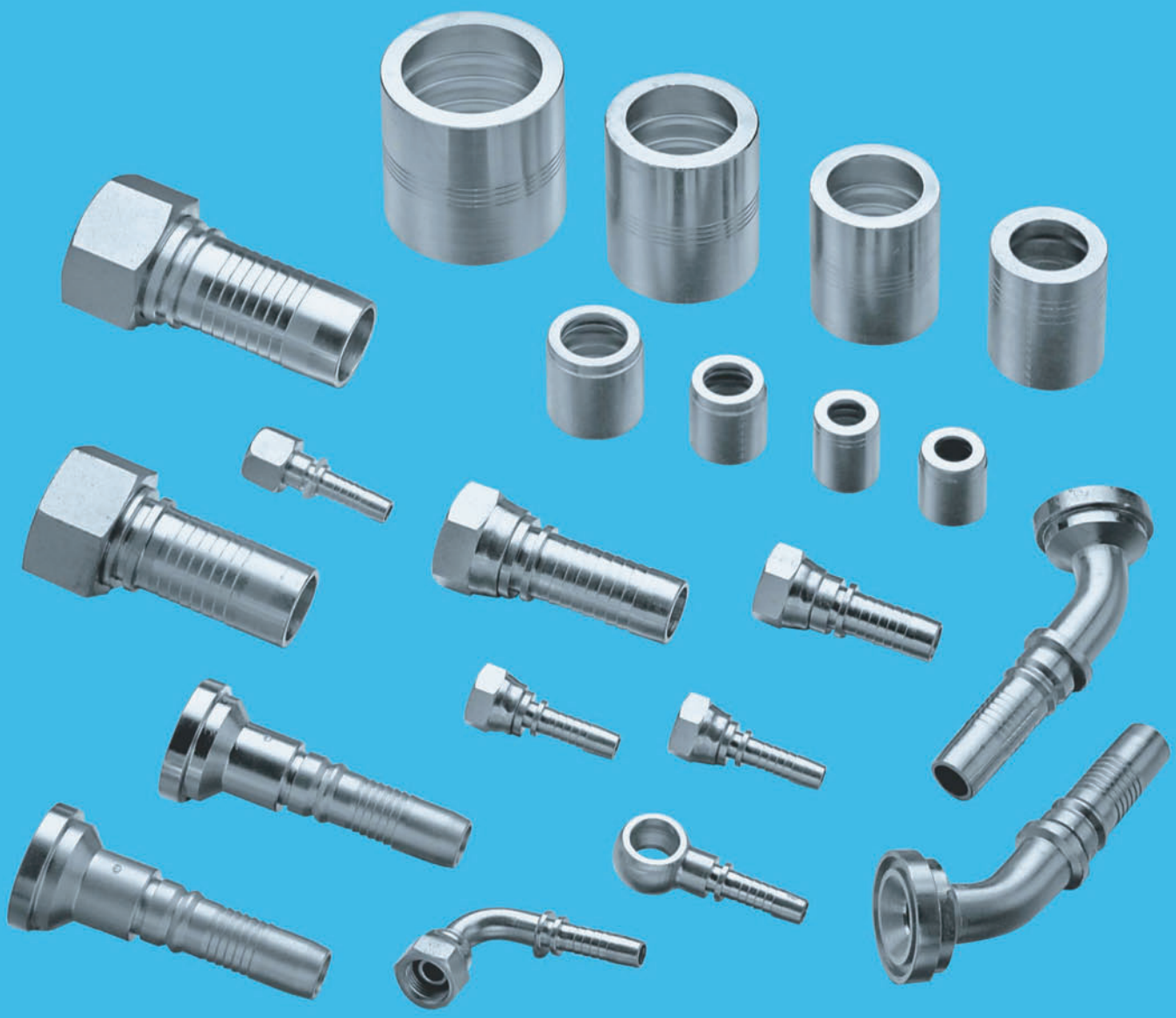

RASTELLI RACCORDI - s.r.l.
27019 VILLANTERIO (PV) - ITALIA

Tel. (0382) 963000 r.a. - 967257 - 967067 - Fax (0382) 967080 - 963210
web: www.rastelliraccordi.com - e-mail: marketing.it@rastelliraccordi.com

– TORINO
Corso Traiano, 70/72
Tel. 011-611508/6197041
Telefax 011-6191106

– PADOVA
Via Navigazione Interna, 9
Tel. 049-7800933
Telefax 049-7800234

– BOLOGNA
Calderara di Reno
Loc. Bargellino
Via dell'Industria, 4/e
Tel.051-728889/728886
Telefax 051-727486

AVELLINO
S. Martino Valle Caudina
Strada Statale 7 - Km. 246
Tel. 0824-832714
Telefax 0824-832720

– D-73760
OSTFILDERN-NELLINGEN
Felix Wankel Str. 21
Tel. (0711) 3412086
Telefax (0711) 3412142

– 28000 CHARTRES-FRANCE
1, Pôle Atlantis
Téléphone: 02-37.30.24.66
Télécopie: 02-37.90.79.82

– 44335 NANTES-CEDEX 3
61, Rue de la Garde - BP93509
Téléphone: 0033 2 40521905
Télécopie: 0033 2 40521961

– 08107 MARTORELLES
Barcelona (ESPAÑA)
C/Can Fanosa n. 18
Poligono Industrial Roca
Téléfono 93-5705895
Telefax 93-5705954


ROTFLEX-F

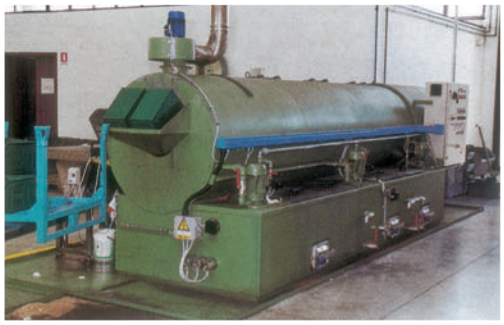


DATI OLIO
130
100,0
52,3
DATI TUBO
0
97,2
84,6
DATI PROVA
1,00
13428
3:40
641
DATI BANCO
186
722
CONFORME

We are happy to announce the new wider range of RASTELLI hose fittings. This new catalogue. in addition to the ones for the other highly qualified RASTELLI products. such as DIN 2353 – ISO 8434-1. SAE J514. French GAZ fittings and BS 5200 adapters. will totally satisfy the hydraulic market requirements and Customer' s needs. Thanks to new production facilities and by adopting well tested process control systems according to ISO 9001. RASTELLI increases its market share in Europe and world-wide. with innovative and reliable products.

Well stocked warehouses at the Company headquarters and at the Italian and European branches. and a dedicated sales organisation allow fast deliveries and high level of service to all our Customers in Italy and abroad.

我们很高兴向大家宣布 Rastelli 新产品 – 软管接头系列 . 这个系列包括 DIN2353-ISO8434-1 .SAE J514，法国英制接头和 BS 5200 接头等优质 RASTELLI 产品，完全满足市场和客户需求。

借助于新的生产设备和采用符合标准 ISO9001 的检测控制系统，RASTELLI 产品的创新和可靠性获得了欧洲和全球市场的认可。

公司总部和意大利及欧洲的仓库备货充足，能够为全球客户快速提供优质的产品和服务。

HOSES INSTALLATION
软管安装指南

In order to ensure their good working state and to avoid shortening the life of the hoses through excessive stress. it is essential that the following requirements be observed.
为了确保最佳的工作状态以及避免因压力过大导致胶管使用寿命缩短，请务必遵守以下安装要求。

1. REQUIREMENTS 要求

The hose lenght shall be defined on the basis of the conditions of installation. It is important to consider the possible shortening or lengthening of a hose under pressure. as reported in the specific norm referred to the hose.
软管的长度根据安装条件来定。考虑到软管承压时有变长或者缩短的可能是非常重要的，参照规范中软管部分
1.1 Any twisting of a hose shall be avoided (see Fig. 1). 避免任何扭曲（如图 1 所示）

Figure1

wrong 错误　　right 正确

1.2 Hoses shall be installed in such a way that they run no risk of breaking due to traction in all working conditions. except for their own weight or that hoses are overloaded if their length is short (see Fig. 2).
安装直管时，应预留松位，使其受压移动时不致于拉紧甚至拉断（如图 2 所示）

Figure 2

wrong 错误　　right 正确

1.3 Hoses shall be possibly installed in conformity with their natural position. taking care not go below the minimum radius of curvature allowed (see Fig. 3).
软管应尽可能的安装在符合其自然的位置，不能低于允许的最小弯曲半径。（如图 3 所示）

Figure 3

wrong 错误　　right 正确

1.4 If a hose must be bent for installation. its length shall be determined in a way that the bending required by design only begins after a length of ≈ 1.5 d (see Fig. 4); if necessary. use a protection for the elbow.
如果软管必须弯曲安装，软管的弯曲应该从长度等于软管外径的 1.5 倍部分开始。如有必要，可在弯曲部位采用保护套。（如图 4 所示）

Figure 4

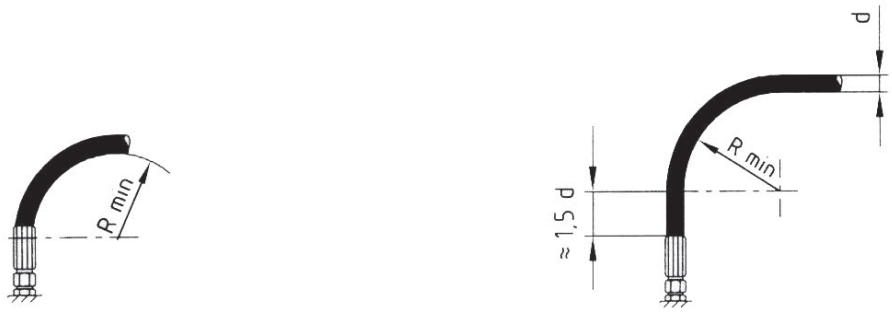

wrong 错误　　right 正确

1.5 Further stress can be avoided by using adequate fittings for the hose (see Fig. 5).
使用合适的接头可以避免压力过大使软管破裂。（如图 5 所示）

Figure 5

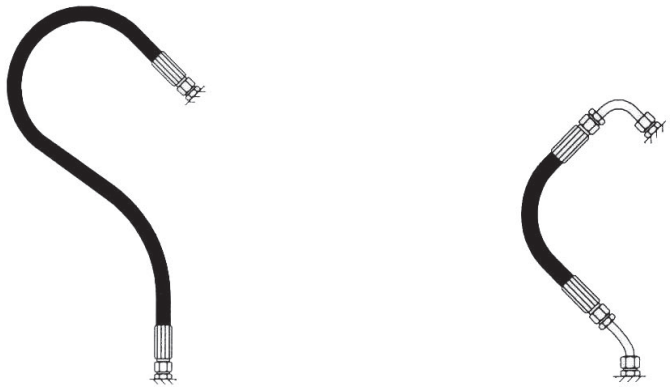

wrong 错误　　right 正确

2. PREVENTION OF EXTERNAL DAMAGES 预防外部损失

2.1 It is necessary to eliminate all mechanical effects on a hose. including its rubbing against the supporting structure or the rubbing of a hose against another hose. by an adequate arrangement and fastening of the same. If necessary. the hoses shall be protected by a sheath. The structure sharp edges shall be covered.
排除软管上的所有机械缺陷是很必要的，包括软管外胶和它的固定结构的摩擦或者软管和其他软管之间的摩擦。可通过仔细检查然后固定好他们解决。如有必要，可以用护套来保护软管，应封盖好尖锐的边缘。（如图 6 所示）

Figure 6

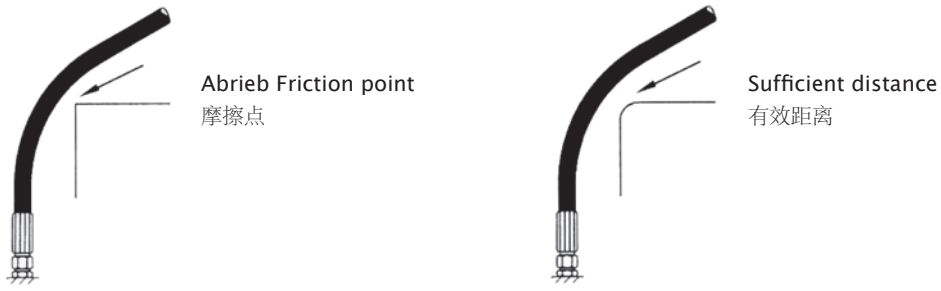

wrong 错误　　right 正确

3. REDUCTION OF BENDING STRESS 减少弯曲压力

When connecting a hose to a moving part. the hose length shall be such that the minimum radius of curvature allowed is respected for the whole span of the movement and/or the hose is not further traction-stressed (see Fig. 7).
在往移动的部件上连接软管，确保软管的长度满足移动部件的最小弯曲半径的要求，以保证整个移动过程中软管没有被拉伸或挤压。（如图 7 所示）

Figure 7

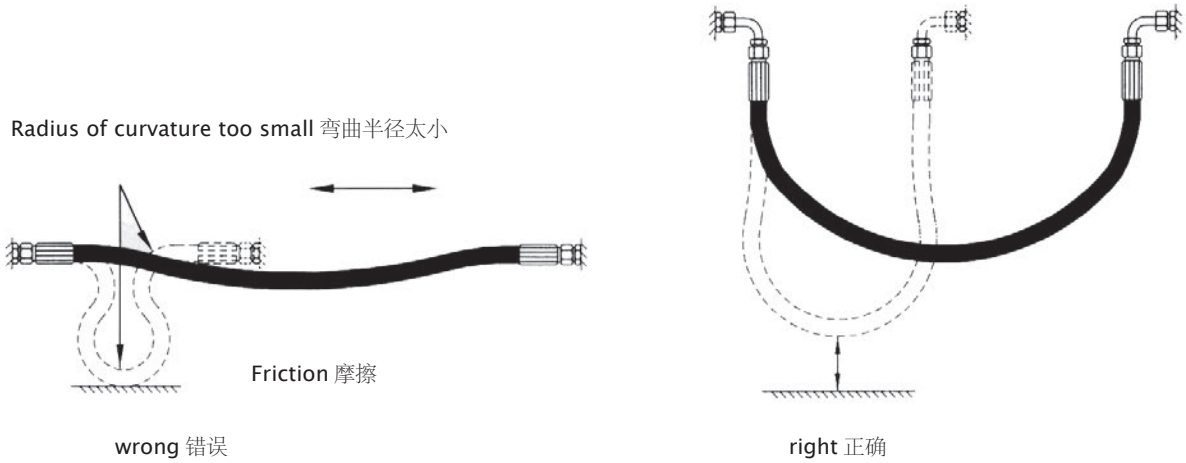

4. PREVENTION OF TORSION STRESS 预防扭转压力

When connecting a hose to a moving part. care shall be taken not to twist the hose. in case movement and bending occur at the same level. This can be attained by an adequate installation or construction measures (see Fig. 8).
当往移动的部件上连接软管时，小心不要扭曲软管，尤其是在要移动又要弯曲的时候。这可以通过恰当安装和现场测量来解决。（如图 8 所示）

Figure 8

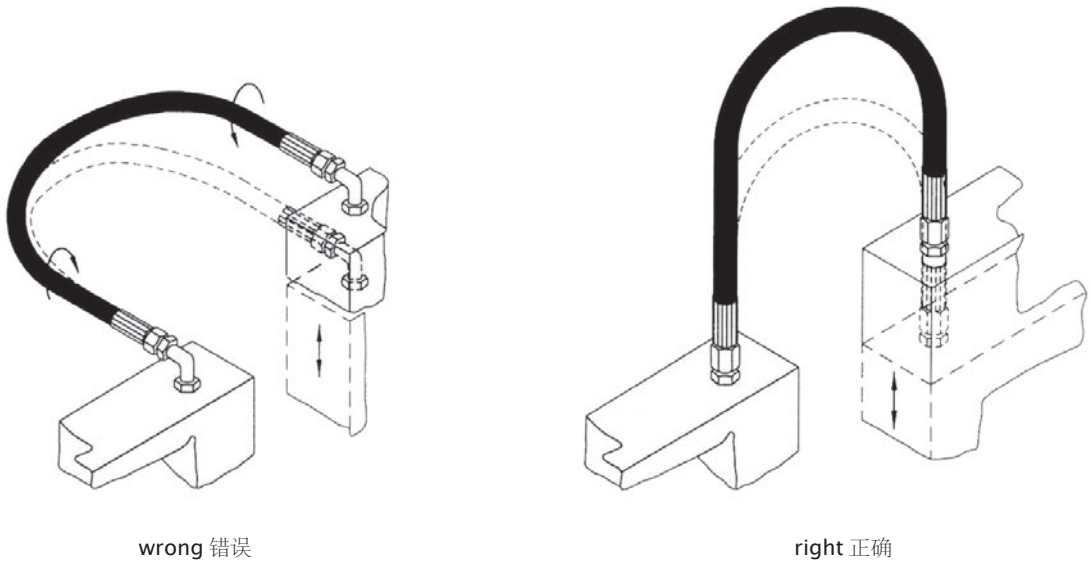

PRESSING VALUE FOR CRIMP FERRULE
软管与套筒扣压参考值

Standard fittings
标准管接头适用软管

EN 853/1SN DIN2002213-ISN SAE100RIAT
1SN 一层钢丝编织软管

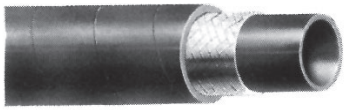

FERRULE CODE 可配用套筒	Bore diameter 内径				Crimping diameter 扣压外径		Outside skive 外胶外径	
	英寸	标号	DN	mm	mm	英寸	mm	英寸
600490304	1/4	4	6	6.4	16.6	0.653	-	-
600490305	5/16	5	8	7.9	18.5	0.728	-	-
600490306	3/8	6	10	9.5	20.5	0.807	-	-
600490308	1/2	8	13	12.7	24.4	0.960	-	-
600490310	5/8	10	16	15.9	28.2	1.110	-	-
600490312	3/4	12	19	19.0	32.2	1.267	-	-
600490316	1”	16	25	25.4	40.7	1.602	-	-
600490320	1”1/4	20	32	31.8	48.2	1.897	-	-
600490324	1”1/2	24	38	38.1	56.5	2.224	-	-
600490332	2”	32	50	50.8	70	2.755	-	-

Standard fittings
标准管接头适用软管

EN 853/1ST DIN 2002211-IST SAE100RIA
一层高强钢丝编织软管

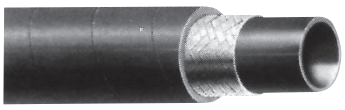

FERRULE CODE 可配用套筒	Bore diameter 内径				Crimping diameter 扣压外径		Outside skive 外胶外径	
	英寸	标号	DN	mm	mm	英寸	mm	英寸
600490104	1/4	4	6	6.4	17.0	0.669	22	0.866
600490105	5/16	5	8	7.9	19.4	0.763	22	0.866
600490106	3/8	6	10	9.5	21.7	0.854	22	0.866
600490108	1/2	8	13	12.7	25.7	1.011	24	0.945
600490110	5/8	10	16	15.9	28.6	1.126	25	0.984
600490112	3/4	12	19	19.0	32.7	1.287	30	1.181
600490116	1"	16	25	25.4	40.5	1.594	35.5	1.398
600490120	1"1/4	20	32	31.8	47.6	1.874	42	1.653
600490124	1"1/2	24	38	38.1	54.1	2.130	45	1.772
600490132	2"	32	50	50.5	66.8	2.630	58.5	2.303

Standard fittings
标准管接头适用软管

EN 857/1SC
一层高强度钢丝编织紧凑型软管

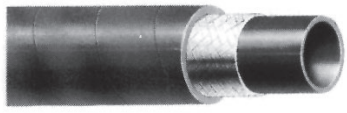

FERRULE CODE 可配用套筒	Bore diameter 内径				Crimping diameter 扣压外径		Outside skive 外胶外径	
	英寸	标号	DN	mm	mm	英寸	mm	英寸
600490404	1/4	4	6	6.4	15.9	0.626	-	-
600490405	5/16	5	8	7.9	16.6	0.653	-	-
600490406	3/8	6	10	9.5	19.8	0.779	-	-
600490408	1/2	8	13	12.7	22.9	0.901	-	-

EN 853/2SN DIN 2002214-2SN SAE 100R2AT
两层高强度钢丝编织型软管

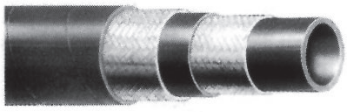

FERRULE CODE 可配用套筒	Bore diameter 内径				Crimping diameter 扣压外径		Outside skive 外胶外径	
	英寸	标号	DN	mm	mm	英寸	mm	英寸
600490304	1/4	4	6	6.4	17.7	0.696	-	-
600490305	5/16	5	8	7.9	19.6	0.771	-	-
600490306	3/8	6	10	9.5	21.5	0.846	-	-
600490308	1/2	8	13	12.7	25.6	1.008	-	-
600490310	5/8	10	16	15.9	29.4	1.157	-	-
600490312	3/4	12	19	19.0	33.4	1.315	-	-
600490316	1"	16	25	25.4	42.0	1.653	-	-
600490320	1"1/4	20	32	31.8	51.4	2.023	-	-
600490324	1"1/2	24	38	38.1	59.5	2.342	-	-
600490332	2"	32	50	50.8	72.5	2.854	-	-

Standard fittings
标准管接头适用的软管

EN 853/2ST DIN 2002212-2ST SAE 100R2A
两层高强度钢丝编织软管

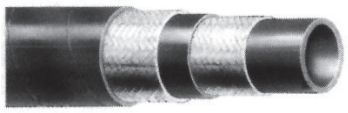

FERRULE CODE 可配用套筒	Bore diameter 内径				Crimping diameter 扣压外径		Outside skive 外胶外径	
	英寸	标号	DN	mm	mm	英寸	mm	英寸
600490504	1/4	4	6	6.4	17.8	0.701	22	0.866
600490505	5/16	5	8	7.9	21.5	0.846	22	0.866
600490506	3/8	6	10	9.5	23.2	0.913	26.5	1.043
600490508	1/2	8	13	12.7	26.6	1.047	26.5	1.043
600490510	5/8	10	16	15.9	29.8	1.173	30.5	1.201
600490512	3/4	12	19	19.0	34.5	1.358	30.5	1.201
600490516	1"	16	25	25.4	42.7	1.681	41	1.614
600490520	1"1/4	20	32	31.8	51.8	2.039	47	1.850
600490524	1"1/2	24	38	38.1	59.7	2.350	56	2.205
600490532	2"	32	50	50.8	72.5	2.854	58	2.283

SPECIFICATIONS EN 853/2ST DIN 20022/2-2ST SAE 100 R2A-R9*
两层高强度钢丝编织软管

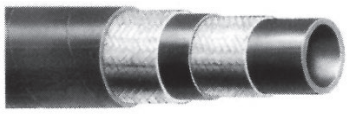

FERRULE CODE 可配用套筒	Bore diameter 内径				Crimping diameter 扣压外径		Outside skive 外胶外径	
	英寸	标号	DN	mm	mm	英寸	mm	英寸
600490204	1/4	4	6	6.4	18.4	0.724	22	0.866
600490205	5/16	5	8	7.9	20.5	0.807	22	0.866
600490206 *	3/8	6	10	9.5	23.5	0.925	22	0.866
600490208 *	1/2	8	13	12.7	26.8	1.055	24	0.945
600490210	5/8	10	16	15.9	30.2	1.189	25.5	1.004
600490212 *	3/4	12	19	19.0	34.2	1.346	30	1.181
600490216 *	1"	16	25	25.4	42.1	1.657	35.5	1.398
600490220	1"1/4	20	32	31.8	52.5	2.067	42.5	1.673
600490224	1"1/2	24	38	38.1	58.0	2.283	45.5	1.791
600490232	2"	32	50	50.8	71.0	2.795	59	2.323

Standard fittings
标准管接头适用的软管

EN 857/2SC SAE 100R16
两层高强度钢丝编织软管

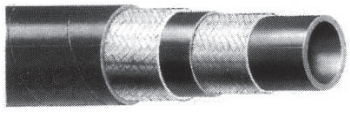

FERRULE CODE 可配用套筒	Bore diameter 内径				Crimping diameter 扣压外径		Outside skive 外胶外径	
	英寸	标号	DN	mm	mm	英寸	mm	英寸
600490304	1/4	4	6	6.4	16.6	0.653	-	-
600490305	5/16	5	8	7.9	18.5	0.728	-	-
600490306	3/8	6	10	9.5	20.5	0.807	-	-
600490308	1/2	8	13	12.7	24.4	0.960	-	-
600490310	5/8	10	16	15.9	28.2	1.110	-	-
600490312	3/4	12	19	19.0	32.2	1.267	-	-
600490316	1”	16	25	25.4	40.7	1.602	-	-

SAE 100 R17
高压热塑管

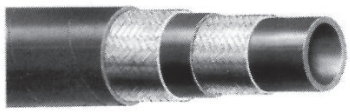

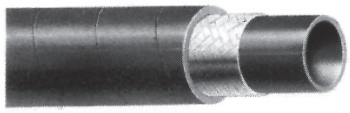

FERRULE CODE 可配用套筒	Bore diameter 内径				Crimping diameter 扣压外径		Outside skive 外胶外径	
	英寸	标号	DN	mm	mm	英寸	mm	英寸
600490404	1/4	4	6	6.4	15.9	0.626	-	-
600490405	5/16	5	8	7.9	16.6	0.653	-	-
600490406	3/8	6	10	9.5	19.8	0.779	-	-
600490308	1/2	8	13	12.7	24.4	0.960	-	-
600490310	5/8	10	16	15.9	28.2	1.110	-	-
600490312	3/4	12	19	19.0	32.2	1.267	-	-
600490316	1”	16	25	25.4	40.7	1.602	-	-

Standard fittings
标准管接头适用的软管

Thermoplastic tubes and fabric braidings
热塑性胶管和纤维软管

No skive
不剥胶

EN 854/1 TE DIN 20021/1-1TE SAE 100R6-R7-R8
一层纤维编织软管

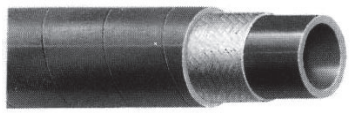

FERRULE CODE 可配用套筒	Bore diameter 内径				Crimping diameter 扣压外径		Crimping diameter 扣压外径		Crimping diameter 扣压外径		Crimping diameter 扣压外径	
	英寸	标号	DN	mm	mm	英寸	mm	英寸	mm	英寸	mm	英寸
600490704	1/4	4	6	6.4	16.1	0.634	15.8	0.622	15.8	0.622	16.0	0.630
600490705	5/16	5	8	7.9	17.8	0.700	17.8	0.700	17.5	0.689	17.6	0.693
600490706	3/8	6	10	9.5	19.6	0.772	19.7	0.776	19.8	0.780	19.6	0.772
600490708	1/2	8	13	12.7	23.8	0.937	24.0	0.945	23.9	0.941	23.0	0.906

Standard fittings
标准管接头适用的软管

EN 856/4SP DIN 20023/1-4SP SAE 100R9R
四层高强度钢丝缠绕软管

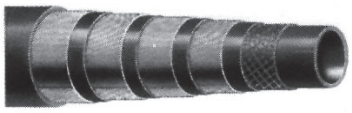

FERRULE CODE 可配用套筒	Bore diameter 内径				Crimping diameter 扣压外径		Outside skive 外胶外径	
	英寸	标号	DN	mm	mm	英寸	mm	英寸)
600490504	1/4	4	6	6.4	18.8	0.740	22	0.866
600490506	3/8	6	10	9.5	23.4	0.921	26.5	1.043
600490508	1/2	8	13	12.7	26.4	1.039	26.5	1.043
600490510	5/8	10	16	15.9	29.9	1.177	30.5	1.201
600490512	3/4	12	19	19.0	34.8	1.370	30.5	1.201
600490516	1"	16	25	25.4	42.4	1.669	41	1.614
600490520	1"1/4	20	32	31.8	51.9	2.043	47	1.850
600490524	1"1/2	24	38	38.1	60.2	2.370	56	2.205
600490532	2"	32	50	50.8	73.1	2.870	58	2.283

Standard fittings
标准管接头适用的软管

EN 856/4SH DIN 20023/2-4SH
四层高强度钢丝缠绕软管

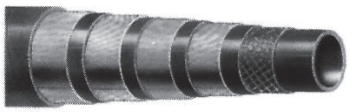

FERRULE CODE 可配用套筒	Bore diameter 内径				Crimping diameter 扣压外径		Inside skive 内胶外径		Outside skive 外胶外径	
	英寸	标号	DN	mm	mm	英寸	mm	英寸	mm	英寸
600491420	1"1/4	20	32	31.8	48.4	1.905	16	0.630	54	2.126
600491424	1"1/2	24	38	38.1	58.1	2.287	18	0.709	62	2.441
600491432	2"	32	50	50.8	70.8	2.787	19	0.748	64	2.520

SPECIFICATIONS
EN 856/R12
SAE 100 R12
四层高强度钢丝缠绕增强层软管

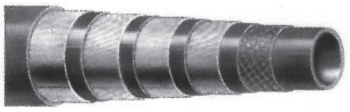

FERRULE CODE 可配用套筒	Bore diameter 内径				Crimping diameter 扣压外径		Outside skive 外胶外径	
	英寸	标号	DN	mm	mm	英寸	mm	英寸
600490506	3/8	6	10	9.5	23.2	0.913	26.5	1.043
600490508	1/2	8	13	12.7	26.8	1.055	26.5	1.043
600490512	3/4	12	19	19.0	34.4	1.354	30.5	1.201
600490516	1"	16	25	25.4	42.1	1.657	41	1.614
600490520	1"1/4	20	32	31.8	50.1	1.988	47	1.850
600490524	1"1/2	24	38	38.1	59.0	2.322	56	2.205
600490532	2"	32	50	50.8	72.0	2.834	58	2.283

Interlock fittings
配剥内外胶软管的接头

SPECIFICATIONS
EN 856/4SH
DIN 20023/2 - 4SH
四层高强度钢丝缠绕软管

FERRULE CODE 可配用套筒	Bore diameter 内径				Crimping diameter 扣压外径		Inside skive 内胶外径		Outside skive 外胶外径	
	英寸	标号	DN	mm	mm	英寸	mm	英寸	mm	英寸
600491612	3/4	12	19	19.0	33.70	1.327	13.50	0.530	57.00	2.240
600491616	1"	16	25	25.4	42.00	1.654	17.00	0.670	65.00	2.560
600491620	1"1/4	20	32	31.8	50.50	1.988	21.50	0.850	74.00	2.910
600491624	1"1/2	24	38	38.1	58.00	2.283	25.80	1.020	81.00	3.190
600491632	2"	32	50	50.8	72.70	2.862	30.00	1.180	89.00	3.500

SPECIFICATIONS
EN 856/R13
SAE 100 R13
四层高强度钢丝缠绕软管

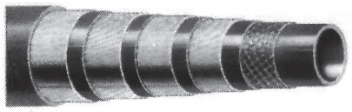

FERRULE CODE 可配用套筒	Bore diameter 内径				Crimping diameter 扣压外径		Inside skive 内胶外径		Outside skive 外胶外径	
	英寸	标号	DN	mm	mm	英寸	mm	英寸	mm	英寸
600491612	3/4	12	19	19.0	34.10	1.343	13.50	0.530	57.00	2.240
600491616	1"	16	25	25.4	42.50	1.673	17.00	0.670	65.00	2.560
600491720	1"1/4	20	32	31.8	53.80	2.118	21.50	0.850	74.00	2.910
600491724	1"1/2	24	38	38.1	60.50	2.382	25.80	1.020	81.00	3.190
600491732	2"	32	50	50.8	77.90	3.067	30.00	1.180	89.00	3.500

Interlock fittings
配剥内外胶软管的接头

SPECIFICATIONS
SAE 100 R15
四层或六层高强度钢丝缠绕软管

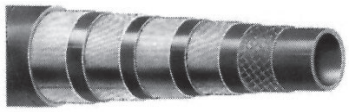

FERRULE CODE 可配用套筒	Bore diameter 内径				Crimping diameter 扣压外径		Inside skive 内胶外径		Outside skive 外胶外径	
	英寸	标号	DN	mm	mm	英寸	mm	英寸	mm	英寸
600491612	3/4	12	19	19.0	33.70	1.327	13.50	0.530	57.00	2.240
600491616	1"	16	25	25.4	41.80	1.646	17.00	0.670	65.00	2.560
600491720	1"1/4	20	32	31.8	53.60	2.110	21.50	0.850	74.00	2.910
600491724	1"1/2	24	38	38.1	60.50	2.382	25.80	1.020	81.00	3.190

The pressing diameter of the crimp ferrule are indicative. because of the great tolerance on tube's diameters. could cause a collapse of the fitting's insert of diameter. The contraction of inside diameter couldn't be higher then 0.3-0.4 mm for diameters 1/4" - 5/16" - 3/8" and 0.5-0.7 mm for superior diameters. On the contrary it will be necessary to modify the pressing diameter in proportion.

WARNING: Technical characteristics contained in this document are indicative and don't constitute a technical specification. Information subject to change without notice.

注意：本图示中包含的技术参数仅供参考，若有更改，恕不另行通知。

产品索引

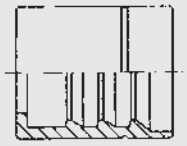 600490100		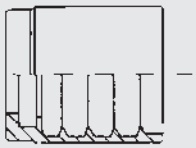 600490300	
SKIVE FERRULE FOR SAE 100 R1A EN 853-1ST HOSE 一层剥外胶套筒	Pag. 页码 **294**	NO-SKIVE FERRULE FOR SAE 100 R1AT - R2AT - R16-R17 EN 853 - 1SN-2SN EN 857 - 2SC 两层不剥外胶套筒	Pag. 页码 **296**
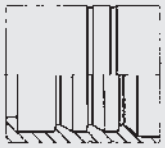 600490200		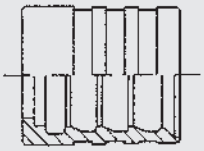 600490500	
SKIVE FERRULE FOR SAE 100 R2A - R9 EN 853-2ST HOSE 两层剥外胶套筒	Pag. 页码 **294**	SKIVE FERRULE FOR SAE 100 R2A - R9 - R9R - R12 EN 856 - 4SP EN 853 - 2ST HOSE 四层剥外胶套筒	Pag. 页码 **296**
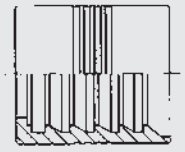 600491400		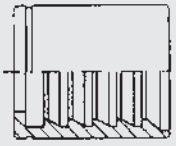 600491100	
SKIVE FERRULE FOR EN 856 - 4SH HOSE 四层剥外胶套筒	Pag. 页码 **295**	SKIVE FERRULE FOR SAE 100 R1AT EN 853 - 1SN HOSE 一层剥外胶套筒	Pag. 页码 **297**
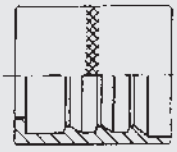 600490700		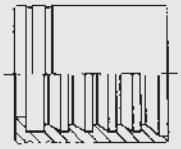 600491200	
NO-SKIVE FERRULE FOR SAE 100 R6-R7-R8 EN 854 - 1TE HOSE 树脂软管套筒	Pag. 页码 **295**	NO-SKIVE FERRULE FOR SAE 100 R2AT EN 853-2SN HOSE 两层不剥外胶套筒	Pag. 页码 **297**
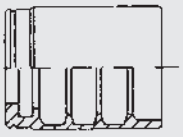 600490400		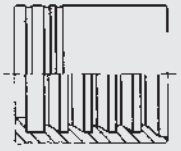 600490000	
NO-SKIVE FERRULE FOR EN 857 - 1SC HOSE 一层不剥外胶套筒	Pag. 页码 **296**	NO-SKIVE FERRULE FOR SAE 100 R1AT - R2AT EN 853 - 1SN - 2SN HOSE 一层 / 两层共同不剥外胶套筒	Pag. 页码 **297**

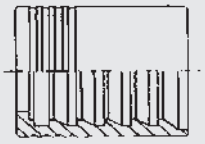 600490900		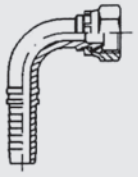 600170000	
SKIVE FERRULE FOR SAE 100 R9R EN 856 - 4SP HOSE 四层剥外胶套筒	Pag. 页码 **298**	90° BSP FEMALE SWEPT ELBOW 60° CONE 英制内螺纹 60° 外锥面密封 90° 弯接头	Pag. 页码 **304**
 600230000		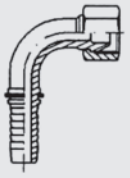 600320000	
BSP MALE TAPERED 英制锥管外螺纹直接头	Pag. 页码 **302**	90° BSP FEMALE SWEPT ELBOW 60° CONE 英制内螺纹 60° 外锥面密封带套螺母 90° 弯接头	Pag. 页码 **304**
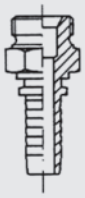 600200000		 600180000	
BSP MALE PARALLEL 60° CONE SEAT 英制外螺纹 60° 锥面密封直接头	Pag. 页码 **302**	45° BSP FEMALE SWEPT ELBOW 60° CONE 英制内螺纹 60° 外锥面密封 45° 弯接头	Pag. 页码 **305**
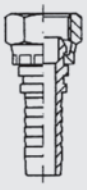 600160000		 600330000	
BSP FEMALE 60° CONE SEAT 英制内螺纹 60° 外锥面密封直接头	Pag. 页码 **303**	45° BSP FEMALE SWEPT ELBOW 60° CONE 英制内螺纹 60° 外锥面密封带套螺母 45° 弯接头	Pag. 页码 **305**
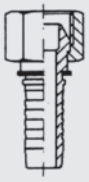 600310000		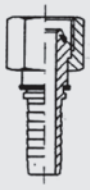 600550000	
BSP FEMALE 60° CONE SEAT 英制内螺纹 60° 外锥面密封带套螺母直接头	Pag. 页码 **303**	BSP O-RING FEMALE 60° CONE 英制内螺纹 60° 外锥面带 O 型圈密封直接头	Pag. 页码 **306**

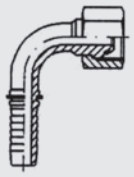

600560000

90° BSP O-RING FEMALE ELBOW 60° CONE 英制内螺纹 60° 外锥面带 O 型圈密封 90° 弯接头	Pag. 页码 **306**

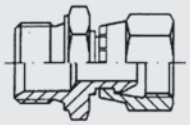

600020000

REDUCED STRAIGHT ADAPTER MALE BSP CONED 60° FEMALE CAP - SURFACE 60° 变径英制外螺纹 60° 内锥密封 / 英制内螺纹 60° 外锥过渡接头	Pag. 页码 **308**

600570000

45° BSP O-RING FEMALE ELBOW 60° CONE 英制内螺纹 60° 外锥面带 O 型圈密封 45° 弯接头	Pag. 页码 **306**

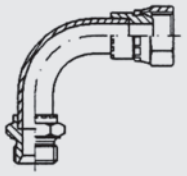

600030000

ADAPTER 90° CYLINDRICAL MALE CONED 60° FEMALE CAP SURFACE 60° 英制外螺纹 60° 内锥密封 / 英制内螺纹 90° 弯接头	Pag. 页码 **308**

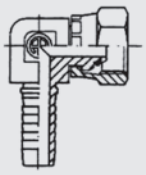

600510000

90° BSP O-RING FEMALE COMPACT ELBOW 60° CONE 90° 英制短身内螺纹 60° 外锥面带 O 型圈密封接头	Pag. 页码 **307**

600440000

JIC MALE 74° CONE SAE J514 美制 UNF 外螺纹 74° 外锥面直接头	Pag. 页码 **309**

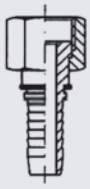

600220000

BSP FEMALE FLAT FACE 英制内螺纹平面密封直接头	Pag. 页码 **307**

600240000

NPTF MALE 60° CONE SEAT SAE J516 美制 NPTF 外螺纹直接头	Pag. 页码 **309**

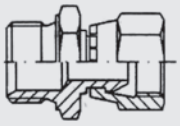

600010000

STRAIGHT ADAPTER MALE BSP CONED 60° FEMALE CAP SURFACE 60° 英制外螺纹 60° 内锥密封 / 英制内螺纹 60° 外锥过渡接头	Pag. 页码 **308**

600410000

JIC FEMALE 74° CONE SEAT - SAE J514 美制 UNF 内螺纹 74° 外锥面直接头	Pag. 页码 **310**

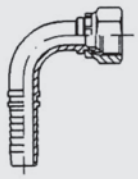

600420000

90° JIC FEMALE SWEPT ELBOW 74° CONE - SEAT SAE J514 美制 UNF 内螺纹 74° 外锥 90° 弯接头	Pag. 页码 **310**

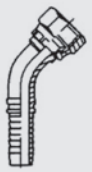

600430000

45° JIC FEMALE SWEPT ELBOW 74° CONE SEAT - SAE J514 美制 UNF 内螺纹 74° 外锥 45° 弯接头	Pag. 页码 **311**

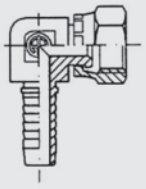

600500000

90° JIC FEMALE COMPACT ELBOW 74° CONE SEAT - SAE J514 90° 美制 UNF 短身内螺纹接头	Pag. 页码 **311**

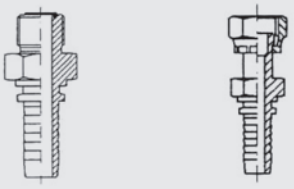

600110000

ORFS MALE - FEMALE SAE J1453 美制 ORFS 外螺纹平面密封直接头 / 美制 ORFS 内螺纹平面密封直接头	Pag. 页码 **312**

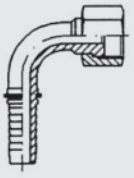

600120000

90° ORFS FEMALE SAE J1453 美制 ORFS 内 螺纹平面密封 90° 弯接头	Pag. 页码 **312**

600130000

45° ORFS FEMALE SAE J1453 美制 ORFS 内螺纹平面密封 45° 弯接头	Pag. 页码 **312**

600350000

SAE J518 STRAIGHT FLANGE 3000 PSI SAE J518 法兰 3000 PSI 轻系列直法兰	Pag. 页码 **313**

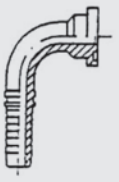

600360000

90° SAE J518 FLANGE 3000 PSI SAE J518 法兰 3000 PSI 轻系列 90° 弯法兰	Pag. 页码 **314**

600370000

45° SAE J518 FLANGE 3000 PSI SAE J518 法兰 3000 PSI 轻系列 45° 弯法兰	Pag. 页码 **314**

600380000

SAE J518 STRAIGHT FLANGE 6000 PSI SAE J518 法兰 6000 PSI 重系列直法兰	Pag. 页码 **315**

600390000

90° SAE J518 FLANGE 6000 PSI SAE J518 法兰 6000 PSI 重系列 90° 弯法兰	Pag. 页码 **315**

600400000

45° SAE J518 FLANGE 6000 PSI SAE J518 法兰 6000 PSI 重系列 45° 弯法兰	Pag. 页码 **316**

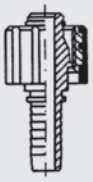

600340000

WASH CLEANER FEMALE 内螺纹清洗直接头	Pag. 页码 **316**

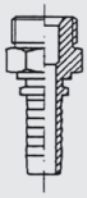

600300000

METRIC MALE 60° CONE SEAT DIN 3853/3863 公制外螺纹 60° 内锥面密封直接头	Pag. 页码 **317**

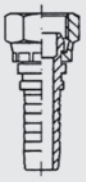

600260000

METRIC FEMALE 60° CONE - DIN 3863 公制内螺纹 60° 外锥面密封直接头	Pag. 页码 **318**

600260000A

METRIC FEMALE 24° / 60° CONE DIN 3868 公制内螺纹 60° 外锥面密封套螺母直接头	Pag. 页码 **318**

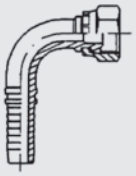

600270000

90° METRIC FEMALE SWEPT ELBOW - 60° CONE DIN 3863 公制内螺纹 60° 外锥面密封 90° 弯接头	Pag. 页码 **319**

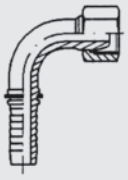

600270000A

90° METRIC FEMALE SWEPT ELBOW 24° / 60° CONE - DIN 3868 公制内螺纹 60° 外锥面密封套螺母 90° 弯接头	Pag. 页码 **319**

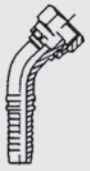

600280000

45° METRIC FEMALE SWEPT ELBOW 60° CONE - DIN 3863 公制内螺纹 60° 外锥面密封 45° 弯接头	Pag. 页码 **320**

600280000A

45° METRIC FEMALE SWEPT ELBOW - 24° / 60° CONE DIN 3868 公制内螺纹 60° 外锥面密封带套螺母 45° 弯接头	Pag. 页码 **320**

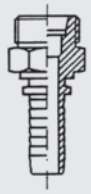

600600000

METRIC MALE 24° CONE SEAT L.T. - DIN 3853/3861 SERIES L DIN 2353 公制外螺纹 24° 内锥面轻系列直接头 DIN 3853/3861	Pag. 页码 **321**

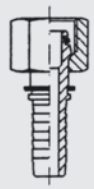

600620000

O-RING METRIC FEMALE 24° CONE L.T. - DIN 3865 SERIES L DIN 2353 公制内螺纹 24° 外锥面带 O 型圈密封轻系列直接头 DIN 3865	Pag. 页码 **321**

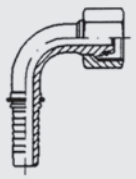

600630000

90° O-RING METRIC FEMALE SWEPTELBOW 24° CONE LT. - DIN 3865 SERIES L DIN 2353 公制内螺纹 24° 外锥面带 O 型圈密封轻系列 90° 弯接头 DIN 3865	Pag. 页码 **322**

600640000

45° O-RING METRIC FEMALE SWEPT ELBOW 24° CONE L.T. - DIN 3865 SERIES L DIN 2353 公制内螺纹 24° 外锥面带 O 型圈密封轻系列 45° 弯接头 DIN 3865	Pag. 页码 **322**

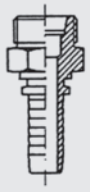

600610000

METRIC MALE 24° CONE SEAT H.T. - DIN 3853/3861 SERIES S DIN 2353 公制外螺纹 24° 内锥面重系列 45° 直接头 DIN 3853/3861	Pag. 页码 **323**

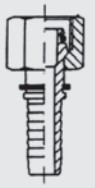

600650000

O-RING METRIC FEMALE 24° CONE H.T. - DIN 3865 SERIES S DIN 2353 公制内螺纹 24° 外锥面带 O 型圈密封重系列 45° 直接头 DIN 3865	Pag. 页码 **323**

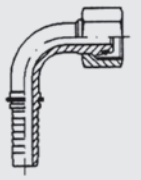

600660000

90° O-RING METRIC FEMALE SWEPT ELBOW 24° CONE H.T. - DIN 3865 SERIES S DIN 2353 公制内螺纹 24° 外锥面带 O 型圈密封重系列 90° 弯接头 DIN 3865	Pag. 页码 **324**

600670000

45° O-RING METRIC FEMALE SWEPT ELBOW 24° CONE H.T. - DIN 3855 SERIES S DIN 2353 公制内螺纹 24° 外锥面带 O 型圈密封重系列 45° 弯接头 DIN 3865	Pag. 页码 **324**

600460000

STRAIGHT METRIC SYAND PIPE L.T. DIN 2353 公制卡套式直管轻系列直接头 DIN 2353	Pag. 页码 **325**

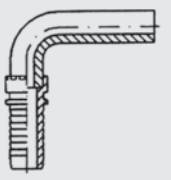

600470000

90° METRIC STAND PIPE L.T. DIN 2353 公制卡套式直管轻系列 90° 弯接头 DIN 2353	Pag. 页码 **325**

 600480000		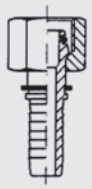 600910000	
45° METRIC STAND PIPE L.T. DIN 2353 公制卡套式直管轻系列 45° 弯接头 DIN 2353	Pag. 页码 **326**	FRENCH METRIC FEMALE GAZ TYPE 法国标准内螺丝 24° 外锥面直接头	Pag. 页码 **328**
 600460000		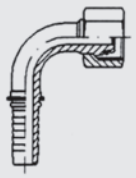 600920000	
STRAIGHT METRIC STAND PIPE H.T. DIN 2353 公制卡套式直管重系列直接头 DIN 2353	Pag. 页码 **326**	90° FRENCH METRIC FEMALE GAZ TYPE 法国标准内螺丝 24° 外锥 90° 弯接头	Pag. 页码 **329**
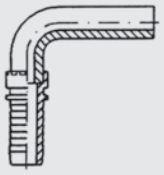 600470000		 600520000	
90° METRIC STAND PIPE L.T. DIN 2353 公制卡套式直管重系列 90° 弯接头 DIN 2353	Pag. 页码 **327**	FRENCH METRIC STRAIGHT STAND PIPE GAZ TYPE 法国标准直管直接头	Pag. 页码 **329**
 600480000		 600190000	
45° METRIC STAND PIPE H.T. DIN 2353 公制卡套式直管重系列 45° 弯接头 DIN 2353	Pag. 页码 **327**	BSP BANJO 英制铰接体	Pag. 页码 **330**
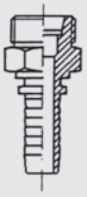 600900000		 600290000	
FRENCH METRIC MALE 24° CONE SEAT GAZ TYPE 法国标准公制外螺纹 24° 内锥面直接头	Pag. 页码 **328**	METRIC BANJO 公制铰接体	Pag. 页码 **330**

INTERLOCK

CRIMP FITTINGS FOR EN 856 - 4SH - SAE 100 R13-R15
SKIVING INSIDE/OUTSIDE
适用 EN 856 - 4SH - SAE 100 R13-R15 内外剥胶管接头

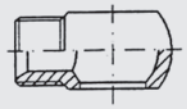

600000500

60° BANJO MALE THREAD BSP - METRIC 英制外螺纹铰接体	Pag. 页码 **331**

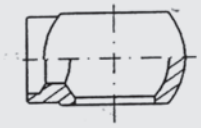

600000200

WELDING BANJO BSP 焊接英制铰接体	Pag. 页码 **331**

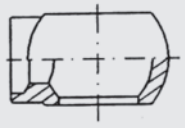

600000100

WELDING BANJO METRIC 焊接公制铰接体	Pag. 页码 **331**

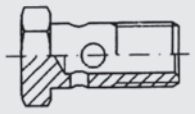

600001200

METRIC BOLT FOR BANJO 公制铰接螺栓	Pag. 页码 **332**

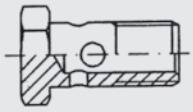

600001300

BSP BOLT FOR BANJO 英制铰接螺栓	Pag. 页码 **332**

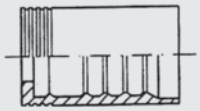

INTERLOCK
600491600

DOUBLE SKIVE FERRULE FOR EN 856 - 4SH HOSE 四层剥内外胶套筒	Pag. 页码 **334**

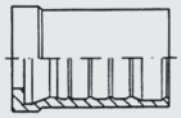

INTERLOCK
600491700

CRIMP FERRULE FOR SAE 100 R13-R15 HOSE 六层剥内外胶套筒	Pag. 页码 **334**

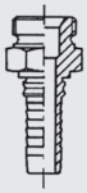

INTERLOCK
600680000

BSP MALE PARALLEL 60° CONE SEAT 英制外螺纹 60° 内锥面密封穿钢丝直接头	Pag. 页码 **335**

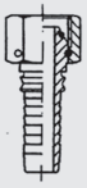

INTERLOCK
600740000

BSP O-RING FEMALE 60° CONE 英制内螺纹 60° 锥面带 O 型圈密封穿钢丝直接头	Pag. 页码 **335**

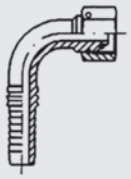

600750000

90° BSP O-RING FEMALE ELBOW 60° CONE 英制内螺纹 60° 锥面带 O 型圈密封穿钢丝 90° 弯接头	Pag. 页码 **336**

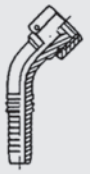

600790000

45° JIC FEMALE SWEPT ELBOW 74° CONE SEAT SAE J 514 美制 UNF 内螺纹 74° 外锥面密封穿钢丝 45° 弯接头	Pag. 页码 **338**

600760000

45° BSP O-RING FEMALE ELBOW 60° CONE 英制内螺纹 60° 锥面带 O 型圈密封穿钢丝 45° 弯接头	Pag. 页码 **336**

600860000

ORFS FEMALE SAE J 1453 美制 ORFS 内螺纹直接头	Pag. 页码 **339**

600690000

NPTF MALE 60° CONE SEAT SAE J 516 美制 NPTF 外螺纹 60° 内锥密封直接头	Pag. 页码 **337**

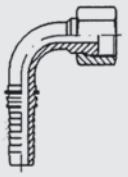

600870000

90° ORFS FEMALE SAE J 1453 美制 ORFS 内螺纹 90° 弯接头	Pag. 页码 **337**

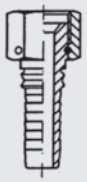

600770000

JIC FEMALE 74° CONE SEAT - SAE J 514 美制 UNF 内螺纹 74° 外锥面密封穿钢丝直接头	Pag. 页码 **337**

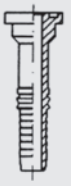

600800000

SAE J518 STRAIGHT - FLANGE 3000 PSI SAE J518 轻系列 3000 PSI 矿用直法兰	Pag. 页码 **340**

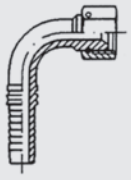

600780000

90° JIC FEMALE SWEPT ELBOW 74° CONE SEAT SAE J 514 美制 UNF 内螺纹 74° 外锥面密封穿钢丝 90° 弯接头	Pag. 页码 **338**

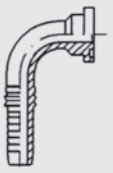

600810000

90° SAE J518 FLANGE 3000 PSI SAE J518 轻系列 3000 PSI 矿用 90° 弯法兰	Pag. 页码 **340**

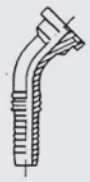

600820000

45° SAE J518 FLANGE 3000 PSI SAE J518 轻系列 3000 PSI 矿用 45° 弯法兰	Pag. 页码 **340**

600830000

SAE J518 STRAIGHT - FLANGE 6000 PSI SAE J518 重系列 6000PSI 矿用直法兰	Pag. 页码 **341**

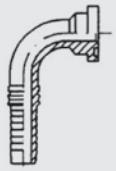

600840000

90° SAE J518 FLANGE 6000 PSI SAE J518 重系列 6000PSI 矿用 90° 弯法兰	Pag. 页码 **341**

600850000

45° SAE J518 FLANGE 6000 PSI SAE J518 重系列 6000PSI 矿用 45° 弯法兰	Pag. 页码 **341**

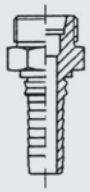

600700000

METRIC MALE 24° CONE SEAT H.T. - DIN 3853/3861 SERIES S DIN 2353 公制外螺纹 24° 内锥密封重型直接头 DIN 3853/3861	Pag. 页码 **342**

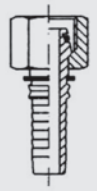

600710000

O-RING METRIC FEMALE 24° CONE HT - DIN 3865 SERIES S DIN 2353 公制内螺纹 24° 外锥面带 O 型圈密封重型直接头	Pag. 页码 **342**

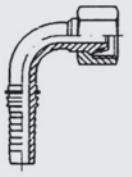

600720000

90° O-RING METRIC FEMALE ELBOW 24° CONE H.T. DIN 3855 SERIES S DIN 2353 公制内螺纹 24° 外锥面带 O 型圈密封 90° 弯直接头	Pag. 页码 **343**

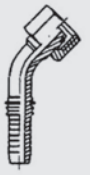

600730000

45° O-RING METRIC FEMALE ELBOW 24° CONE H.T. - DIN 3865 SERIES S DIN 2353 公制内螺纹 24° 外锥面带 O 型圈密封 45° 弯直接头	Pag. 页码 **343**

ASSEMBLY MACHINES 扣压总成机	Pag. 页码 **344**

SKIVE FERRULE FOR SAE 100 R1A EN 853-1ST HOSE
一层剥外胶套筒

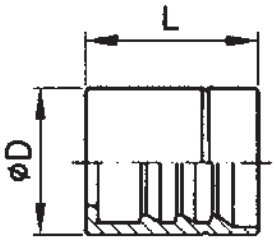

订货型号	Ø 管外径		Ø D	L					
	英寸	mm							
600490104	1/4	6	20	30					
600490105	5/16	8	22	31					
600490106	3/8	10	24	32					
600490108	1/2	13	29	34					
600490110	5/8	16	32	37					
600490112	3/4	19	36	43					
600490116	1"	25	43	51					
600490120	1"1/4	32	50	59					
600490124	1"1/2	38	57	63					
600490132	2"	50	70	78					

SKIVE FERRULE FOR SAE 100 R2A - R9 EN 853-2ST HOSE
两层剥外胶套筒

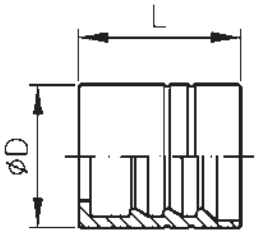

订货型号	Ø 管外径		Ø D	L					
	英寸	mm							
600490204	1/4	6	21	30					
600490205	5/16	8	24	31					
600490206	3/8	10	26	32					
600490208	1/2	13	30	34					
600490210	5/8	16	34	37					
600490212	3/4	19	38	43					
600490216	1"	25	46	51					
600490220	1"1/4	32	56	59					
600490224	1"1/2	38	62	63					
600490232	2"	50	75	78					

SKIVE FERRULE FOR
EN 856 - 4SH
HOSE
四层剥外胶套筒

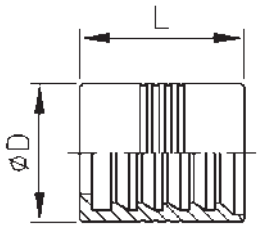

订货型号	Ø 管外径		Ø D	L					
	英寸	mm							
600491420	1"1/4	32	52	66					
600491424	1"1/2	38	62	76.5					
600491432	2"	50	75	80					

NO-SKIVE FERRULE FOR
SAE 100 R6 - R7 - R8
EN 854 - 1TE HOSE
树脂胶管套筒

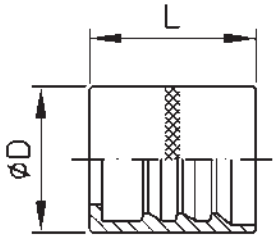

订货型号	Ø 管外径		Ø D	L					
	英寸	mm							
600490704	1/4	6	17	29	*				
600490705	5/16	8	19	30.5	*				
600490706	3/8	10	21	30.5	*				
600490708	1/2	13	25.5	34	*				

NO-SKIVE FERRULE FOR
EN 857 - 1SC - R17* HOSE
一层不剥外胶套筒

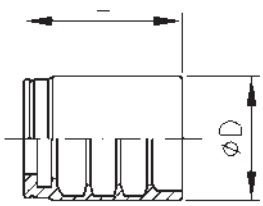

订货型号	Ø 管外径		Ø D	L					
	英寸	mm							
600490404*	1/4	6	21	25.5					
600490405*	5/16	8	23	26.5					
600490406*	3/8	10	25	27					
600490408	1/2	13	28	29					

NO-SKIVE FERRULE FOR
SAE 100 R1AT - R2AT EN 853 - 1SN-2SN
SAE 100 R16-R17 EN 857 - 2SC HOSE
两层不剥外胶套筒

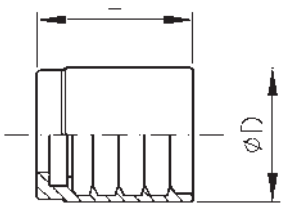

订货型号	Ø 管外径		Ø D	L					
	英寸	mm							
600490304	1/4	6	22	29.5					
600490305	5/16	8	24	29.5					
600490306	3/8	10	26	30					
600490308	1/2	13	30	33.5					
600490310	5/8	16	34	36.5					
600490312	3/4	19	38	39.5					
600490316	1"	25	48	51.5					
600490320	1"1/4	32	59	59					
600490324	1"1/2	38	67	67					
600490332	2"	50	80	72					

SKIVE FERRULE FOR
SAE 100 R2A - R9R - R12 EN 856 - 4SP
EN 853 - 2ST HOSE
四层剥外胶套筒

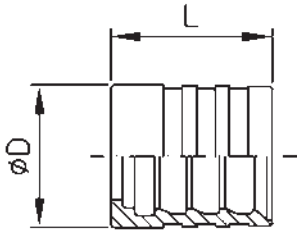

订货型号	Ø 管外径		Ø D	L					
	英寸	mm							
600490504	1/4	6	22	30					
600490505	5/16	8	24	31					
600490506	3/8	10	26	33					
600490508	1/2	13	30	34					
600490510	5/8	16	33	39					
600490512	3/4	19	38	40					
600490516	1"	25	46	54					
600490520	1"1/4	32	57	60					
600490524	1"1/2	38	65	70					
600490532	2"	50	79	72					

NO-SKIVE FERRULE
FOR SAE 100 R1AT
EN 853 - 1SN HOSE
一层不剥外胶套筒

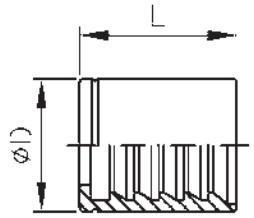

订货型号	Ø 管外径		Ø D	L					
	英寸	mm							
600491104	1/4	6	20	30.5					
600491105	5/16	8	21	31					
600491106	3/8	10	24	31.5					
600491116	1"	25	43	51					

库存随订单在变化，交期另行通知

NO-SKIVE FERRULE
FOR SAE 100 R2AT
EN 853 - 2SN HOSE
两层不剥外胶套筒

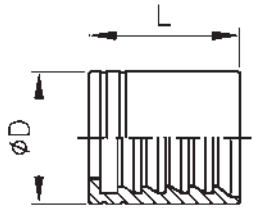

订货型号	Ø 管外径		Ø D	L					
	英寸	mm							
600491204	1/4	6	21	30.5					
600491205	5/16	8	24	31					
600491206	3/8	10	25.5	32					
600491216	1"	25	46	50					

库存随订单在变化，交期另行通知

NO-SKIVE FERRULE
FOR SAE 100 R1AT - R2AT
EN 853 - 1SN - EN 853 - 2SN HOSE
一层 / 两层不剥外胶套筒

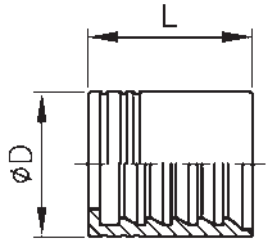

订货型号	Ø 管外径		Ø D	L					
	英寸	mm							
600490008	1/2	13	29	34					
600490010	5/8	16	32	37					
600490012	3/4	19	36	42.5					

库存随订单在变化，交期另行通知

SKIVE FERRULE FOR
SAE 100 R9R
EN 856 - 4SP HOSE
四层剥外胶套筒

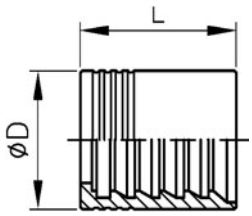

订货型号	Ø 管外径		Ø D	L					
	英寸	mm							
600490912	3/4	19	38	55					
600490916	1"	25	46	60					

库存随订单在变化，交期另行通知

Standard fittings
标准管接头适用的软管

ISN 一层钢系编织软管
EN 853/1SN
DIN 20022/3-1SN
SAE 100 R1AT

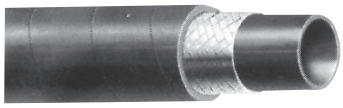

Ferrule Code 可配用套筒	Bore diameter 内径				Crimping diameter 扣压外径		Outside skive 外胶外径	
	英寸	标号	DN	mm	mm	英寸	mm	英寸
600491104	1/4	4	6	6.4	16.4	0.645	-	-
600491105	5/16	5	8	7.9	17.4	0.685	-	-
600491106	3/8	6	10	9.5	20.1	0.791	-	-
600491116	1"	16	25	25.4	38.4	1.512	-	-

ISN 一层钢丝编织软管
EN 853/1SN
DIN 20022/3-1SN
SAE 100 R1AT

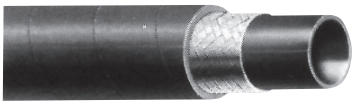

FERRULE CODE 可配用套筒	Bore diameter 内径				Crimping diameter 扣压外径		Outside skive 外胶外径	
	英寸	标号	DN	mm	mm	英寸	mm	英寸
600490008	1/2	8	13	12.7	24.3	0.957	-	-
600490010	5/8	10	16	15.9	27.2	1.071	-	-
600490012	3/4	12	19	19.0	30.6	1.205	-	-

Standard fittings
标准管接头适用的软管

两层高强度钢丝编织软管
EN 853/2SN
DIN 20022/4-2SN
SAE 100 R2AT

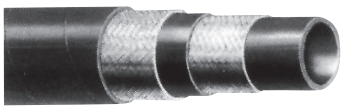

FERRULE CODE 可配用套筒	Bore diameter 内径				Crimping diameter 扣压外径		Outside skive 外胶外径	
	英寸	标号	DN	mm	mm	英寸	mm	英寸
600490008	1/2	8	13	12.7	24.9	0.980	-	-
600490010	5/8	10	16	15.9	27.9	1.098	-	-
600490012	3/4	12	19	19.0	31.7	1.248	-	-

两层高强压钢丝编织软管
EN 853/2SN
DIN 20022/4-2SN
SAE 100 R2AT

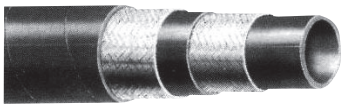

FERRULE CODE 可配用套筒	Bore diameter 内径				Crimping diameter 扣压外径		Outside skive 外胶外径	
	英寸	标号	DN	mm	mm	英寸	mm	英寸
600491204	1/4	4	6	6.4	17.8	0.700	-	-
600491205	5/16	5	8	7.9	20.3	0.799	-	-
600491206	3/8	6	10	9.5	21.3	0.838	-	-
600491216	1”	16	25	25.4	41.3	1.626	-	-

Standard fittings
标准管接头适用的软管

四层高强压钢丝缠绕软管
EN 856/4SP
DIN 20023/1 - 4SP
SAE 100 R9R

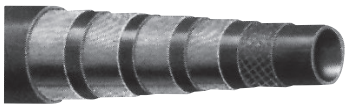

FERRULE CODE 可配用套筒	Bore diameter 内径				Crimping diameter 扣压外径		Outside skive 外胶外径	
	英寸	标号	DN	mm	mm	英寸	mm	英寸
600490912	3/4	12	19	19	34.6	1.362	45	1.772
600490916	1"	16	25	25.4	42.0	1.653	50	1.968

BSP MALE TAPERED
英制锥管外螺纹直接头

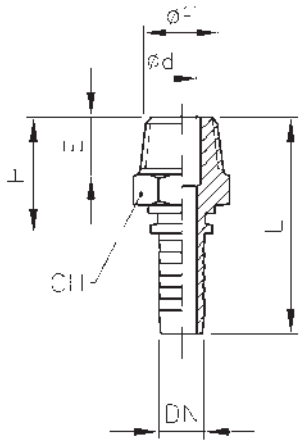

订货型号	Ø 管外径		Ø F	CH	L	H	Ø d	E	
	英寸	mm							
600230404	1/4	6	1/4	14	53.3	26	4	13	
600230604	1/4	6	3/8	19	54.3	27	4	13	
600230605	5/16	8	3/8	19	56	27.5	5.5	13	
600230606	3/8	10	3/8	19	56.5	28	7	13	
600230806	3/8	10	1/2	22	60	31.5	7	16	
600230808	1/2	13	1/2	22	62	32	10	16	
600231212	3/4	19	3/4	27	77	38	15.5	18	
600231616	1"	25	1"	36	93.5	41	20	20	
600232020	1" 1/4	32	1" 1/4	46	105.5	45.5	26	21	
600232424	1" 1/2	38	1" 1/2	50	119	49	32	22	
600233232	2"	50	2"	65	128	53.5	44	25	

BSP MALE PARALLEL 60° CONE SEAT
英制外螺纹 60° 锥面密封直接头

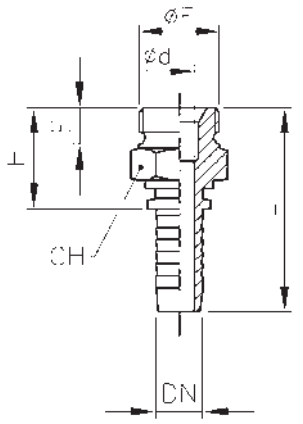

订货型号	Ø 管外径		Ø F	CH	L	H	Ø d	E	
	英寸	mm							
600200404	1/4	6	1/4	19	53	25.7	4	11	
600200604	1/4	6	3/8	22	54.5	27.2	4	12	
600200605	5/16	8	3/8	22	56.5	28	5.5	12	
600200606	3/8	10	3/8	22	56.5	28	7	12	
600200608	1/2	13	3/8	22	58	28	10	12	
600200806	3/8	10	1/2	27	59.5	31	7	14	
600200808	1/2	13	1/2	27	61.5	31.5	10	14	
600201010	5/8	16	5/8	30	66.5	33.5	12.5	16	
600201210	5/8	16	3/4	32	67.5	34.5	12.5	16	
600201212	3/4	19	3/4	32	74.5	35.5	15.5	16	
600201612	3/4	19	1"	41	78.5	39.5	15.5	19	
600201616	1"	25	1"	41	92.5	40	20	19	
600202016	1"	25	1" 1/4	50	96.5	44	20	20	
600202020	1" 1/4	32	1" 1/4	50	105.5	45.5	26	20	
600202420	1" 1/4	32	1" 1/2	55	107.5	47.5	26	22	
600202424	1" 1/2	38	1" 1/2	55	117.5	47.5	32	22	
600203232	2"	50	2"	70	126.5	52	44	25	

BSP FEMALE 60° CONE SEAT CRIMPED BACKNUT
英制内螺纹 60° 外锥面密封直接头

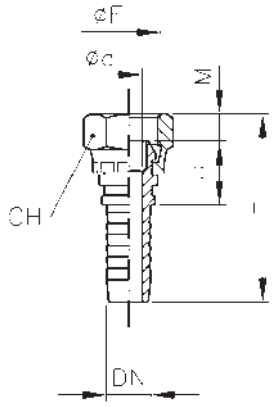

订货型号	Ø 管外径		Ø F	CH	Ø d	M	H	L ≈	
	英寸	mm							
600160404	1/4	6	1/4	19	4	4.5	16.7	48.5	
600160604	1/4	6	3/8	22	4	6	18.7	52	
600160605	5/16	8	3/8	22	5.5	6	20	54.5	
600160606	3/8	10	3/8	22	7	6	20	54.5	
600160806	3/8	10	1/2	27	7	6.5	22	57	
600160808	1/2	13	1/2	27	10	6.5	22.5	59	
600161010	5/8	16	5/8	28	12.5	9.5	24	66.5	
600161210	5/8	16	3/4	32	12.5	8.5	24	65.5	
600161212	3/4	19	3/4	32	15.5	8.5	25.5	73	
600161612	3/4	19	1"	38	15.5	10.5	26	75.5	
600161616	1"	25	1"	38	20	10.5	26.5	89.5	
600162016 (2)	1"	25	1" 1/4	50	20	10	32.5	95	
600162020 (2)	1" 1/4	32	1" 1/4	50	26	10	33	103	
600162420 (2)	1" 1/4	32	1" 1/2	55	26	12	35	107	
600162424 (2)	1" 1/2	38	1" 1/2	55	32	12	35	117	
600163224 (2)	1" 1/2	38	2"	70	32	16	31	117	
600163232 (2)	2"	50	2"	70	44	16	31	121.5	

BSP FEMALE 60° CONE SEAT
英制内螺纹 60° 外锥面密封带套螺母直接头

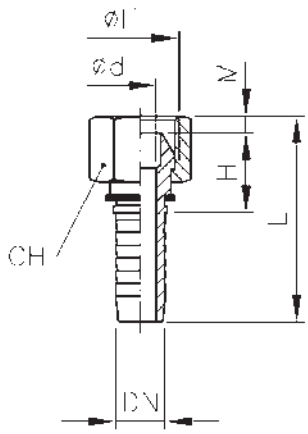

订货型号	Ø 管外径		Ø F	CH	Ø d	M	H	L ≈	
	英寸	mm							
600310404	1/4	6	1/4	19	4	5.4	17	50	
600310604	1/4	6	3/8	22	4	6	19.5	52.5	
600310605	5/16	8	3/8	22	5.5	6	19.5	53.5	
600310606	3/8	10	3/8	22	7	6	20.5	54	
600310806	3/8	10	1/2	27	7	6.5	21	56	
600310808	1/2	13	1/2	27	10	6.5	22.5	58	

90° BSP FEMALE SWEPT ELBOW 60° CONE CRIMPED BACKNUT
英制内螺纹 60° 外锥面密封 90° 弯接头

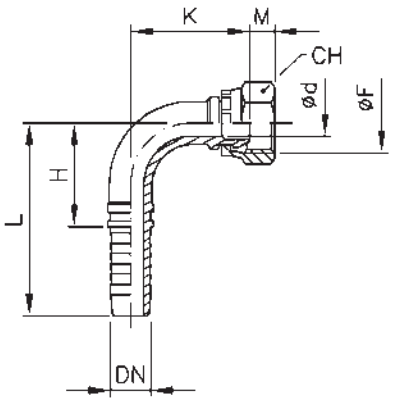

订货型号	Ø 管外径		Ø F	CH	Ø d	M	H ≈	L ≈	K ≈
	英寸	mm							
600170404	1/4	6	1/4	19	4	4.5	23	50.5	28
600170604	1/4	6	3/8	22	4	6	23	50.5	31
600170605	5/16	8	3/8	22	5.5	6	26	54.5	32.5
600170606	3/8	10	3/8	22	7	6	30.5	59	37
600170806	3/8	10	1/2	27	7	6.5	30.5	59	39.5
600170808	1/2	13	1/2	27	10	6.5	38	68	43.5
600171010	5/8	16	5/8	28	12.5	9.5	44.5	77.5	51.5
600171210	5/8	16	3/4	32	12.5	8.5	44.5	77.5	51.5
600171212	3/4	19	3/4	32	15.5	8.5	54	93	58
600171612	3/4	19	1"	38	15.5	10.5	54	93	60.5
600171616	1"	25	1"	38	20	10.5	74	126.5	70.5
600172016 (2)	1"	25	1" 1/4	50	20	10	74	126.5	78.5
600172020 (2)	1" 1/4	32	1" 1/4	50	26	10	80	140	88.5
600172420 (2)	1" 1/4	32	1" 1/2	55	26	12	80	140	91.5
600172424 (2)	1" 1/2	38	1" 1/2	55	32	12	93	140	103.5
600173232 (2)	2"	50	2"	70	44	16	129	203.5	124

90° BSP FEMALE SWEPT ELBOW 60° CONE
英制内螺纹 60° 外锥面密封带套螺母 90° 弯接头

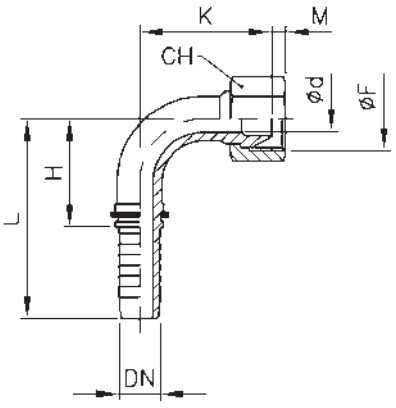

订货型号	Ø 管外径		Ø F	CH	Ø d	M	K ≈	H ≈	L ≈
	英寸	mm							
600320404	1/4	6	1/4	19	4	5.4	28	23	50.5
600320604	1/4	6	3/8	22	4	6	31	23	50.5
600320605	5/16	8	3/8	22	5.5	6	32.5	26	54.5
600320606	3/8	10	3/8	22	7	6	37	30.5	59
600320806	3/8	10	1/2	27	7	6.5	39.5	30.5	59
600320808	1/2	13	1/2	27	10	6.5	43.5	38	68

45° BSP FEMALE SWEPT ELBOW 60° CONE CRIMPED BACKNUT
英制内螺纹 60° 外锥面密封 45° 弯接头

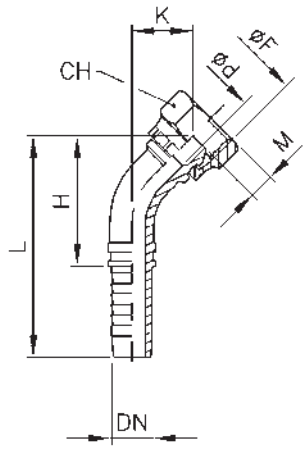

订货型号	Ø 管外径		Ø F	CH	Ø d	M	H ≈	L ≈	K ≈
	管外径	mm							
600180404	1/4	6	1/4	19	4	4.5	37.5	65	14.5
600180604	1/4	6	3/8	22	4	6	39.5	67	17
600180605	5/16	8	3/8	22	5.5	6	44	72.5	17
600180606	3/8	10	3/8	22	7	6	50	78.5	19
600180806	3/8	10	1/2	27	7	6.5	52	80.5	20.5
600180808	1/2	13	1/2	27	10	6.5	62	92	21.5
600181010	5/8	16	5/8	28	12.5	9.5	72.5	105.5	25.5
600181210	5/8	16	3/4	32	12.5	8.5	72.5	105.5	25.5
600181212	3/4	19	3/4	32	15.5	8.5	64	103	28
600181612	3/4	19	1"	38	15.5	10.5	65.5	104.5	30
600181616	1"	25	1"	38	20	10.5	85	137.5	33
600182016 (2)	1"	25	1" 1/4	50	20	10	90.5	143	39
600182020 (2)	1" 1/4	32	1" 1/4	50	26	10	99.5	159.5	42
600182420 (2)	1" 1/2	38	1" 1/2	55	32	12	112	182	48
600183232 (2)	2"	50	2"	70	44	16	132.5	207	52.5

45° BSP FEMALE SWEPT ELBOW 60° CONE
英制内螺纹 60° 外锥面密封带套螺母 45° 弯接头

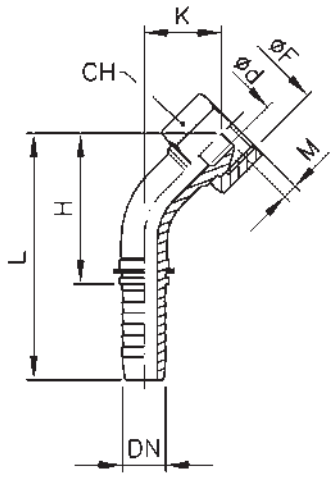

订货型号	Ø 管外径		Ø F	CH	Ø d	M	K ≈	H ≈	L ≈
	英寸	mm							
600330404	1/4	6	1/4	19	4	5.4	14.5	37.5	65
600330604	1/4	6	3/8	22	4	6	17	39.5	67
600330605	5/16	8	3/8	22	5.5	6	17	44	72.5
600330606	3/8	10	3/8	22	7	6	19	50	78.5
600330806	3/8	10	1/2	27	7	6.5	20.5	52	80.5
600330808	1/2	13	1/2	27	10	6.5	21.5	62	92

BSP O-RING
FEMALE 60° CONE (SLIP-ON NUT)
英制内螺纹 60° 外锥面带 O 型圈密封直接头

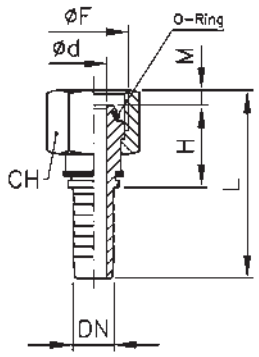

订货型号	Ø 管外径		Ø F	CH	Ø d	M	H	L ≈
	英寸	mm						
600550404	1/4	6	1/4	19	4	5.4	17	50
600550606	3/8	10	3/8	22	7	6	20.5	54
600550808	1/2	13	1/2	27	10	6.5	22.5	58
600551212 (2)	3/4	19	3/4	32	15.5	7.5	25.5	72
600551616 (2)	1"	25	1"	38	20	10	26.5	89
600552016 (3)	1"	25	1" 1/4	50	20	11.5	32.5	96.5
600552020 (3)	1" 1/4	32	1" 1/4	50	26	11.5	33	102.5
600552424 (3)	1" 1/2	38	1" 1/2	55	32	11	35	116
600553232 (3)	2"	50	2"	70	44	16	31	121.5

90° BSP O-RING FEMALE ELBOW
60° CONE (SLIP-ON NUT)
英制内螺纹 60° 外锥面带 O 型圈密封 90° 弯接头

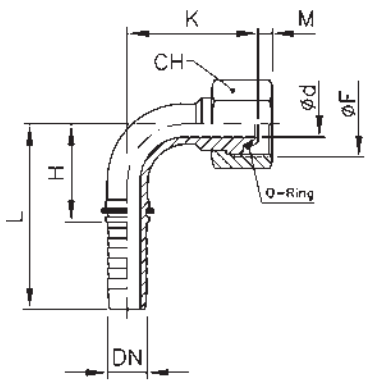

订货型号	Ø 管外径		Ø F	CH	Ø d	M	K ≈	H ≈	L ≈
	英寸	mm							
600560404	1/4	6	1/4	19	4	5.4	28	23	50.5
600560606	3/8	10	3/8	22	7	6	37	30.5	59
600560808	1/2	13	1/2	27	10	6.5	43.5	38	68
600561212 (2)	3/4	19	3/4	32	15.5	7.5	58	54	93
600561616 (2)	1"	25	1"	38	20	10	70.5	74	126.5
600562016 (3)	1"	25	1" 1/4	50	20	11.5	78.5	74	126.5
600562020 (3)	1" 1/4	32	1" 1/4	50	26	11.5	88.5	80	140
600562424 (3)	1" 1/2	38	1" 1/2	55	32	11	103.5	93	163
600563232 (3)	2"	50	2"	70	44	16	124	129	203.5

45° BSP O-RING FEMALE ELBOW
60° CONE (SLIP-ON NUT)
英制内螺纹 60° 外锥面带 O 型圈密封 45° 弯接头

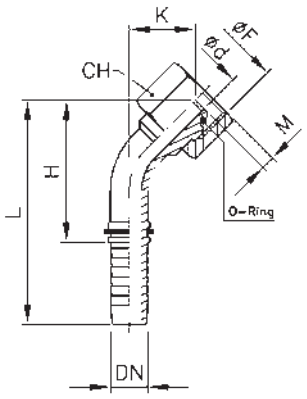

订货型号	Ø 管外径		Ø F	CH	Ø d	M	K ≈	H ≈	L ≈
	英寸	mm							
600570404	1/4	6	1/4	19	4	5.4	14.5	37.5	65
600570606	3/8	10	3/8	22	7	6	19	50	78.5
600570808	1/2	13	1/2	27	10	6.5	21.5	62	92
600571212 (2)	3/4	19	3/4	32	15.5	7.5	28	64	103
600571616 (2)	1"	25	1"	38	20	10	33	85	137.5
600572016 (3)	1"	25	1" 1/4	50	20	11.5	39	90.5	143
600572020 (3)	1" 1/4	32	1" 1/4	50	26	11.5	42	99.5	159.5
600572424 (3)	1" 1/2	38	1" 1/2	55	32	11	48	112	182
600573232 (3)	2"	50	2"	70	44	16	52.5	132.5	207

90° BSP O-RING FEMALE
COMPACT ELBOW 60° CONE
90° 英制短身内螺纹 60° 外锥面带 O 型圈密封接头

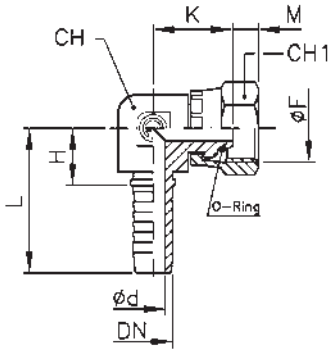

订货型号	Ø 管外径		Ø F	CH	H	M	Ø d	K	CH1	L
	英寸	mm								
600510404	1/4	6	1/4	14	17.7	5.4	4	22	19	44.8
600510606	3/8	10	3/8	17	20	6	7	24	22	48.5
600510808	1/2	13	1/2	24	23.5	6.5	10	31	27	53.5
600511010	5/8	16	5/8	24	23.7	6.5	12.5	31	28	56.5
600511212	3/4	19	3/4	27	28.5	7.5	15.5	35.5	32	67.5
600511616	1”	25	1”	36	31.7	10	20	39.5	38	84.2

BSP FEMALE
FLAT FACE SLIP-ON NUT
英制内螺纹平面密封直接头

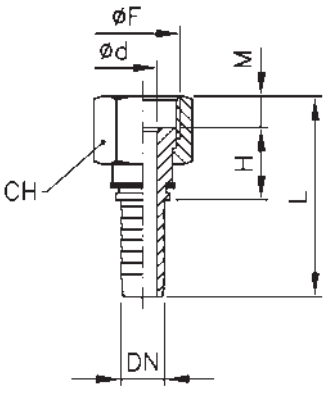

订货型号	Ø 管外径		Ø F	CH	L	H	Ø d	M	
	英寸	mm							
600220404	1/4	6	1/4	19	49.8	14.5	4	8	
600220606	3/8	10	3/8	22	55	17.5	7	9	
600220808	1/2	13	1/2	27	59	19	10	10	
600221208 (2)	1/2	13	3/4	32	61.5	20	10	11.5	
600221212 (2)	3/4	19	3/4	32	72	21.5	15.5	11.5	

STRAIGHT ADAPTER
MALE BSP CONED 60°
FEMALE CAP - SURFACE 60°
英制外螺纹 60° 内锥密封 / 英制内螺纹 60° 外锥过渡接头

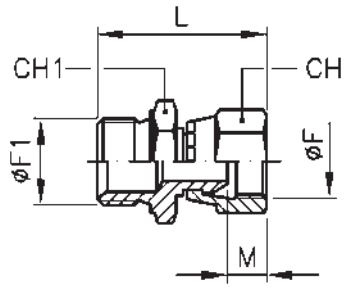

订货型号	Ø F1 GAS	Ø F GAS	CH	CH1	L	M		
600010404	1/4	1/4	19	19	36	4.5		
600010606	3/8	3/8	22	22	41	6		
600010808	1/2	1/2	27	27	46.5	6.5		
600011010	5/8	5/8	28	30	53	9.5		
600011212	3/4	3/4	32	32	53	8.5		
600011616	1"	1"	38/41	41	60.5	10.5		
600012020	1" 1/4	1" 1/4	50	50	67	10		
600012020	1" 1/2	1" 1/2	55	55	72	12		

REDUCED STRAIGHT ADAPTER
MALE BSP CONED 60°
FEMALE CAP - SURFACE 60°
变径英制外螺纹 60° 内锥密封 / 英制内螺纹 60° 外锥过渡接头

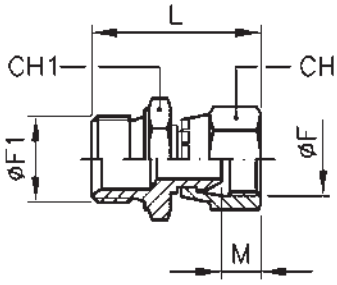

订货型号	Ø F1 GAS	Ø F GAS	CH	CH1	L	M		
600020406	1/4	3/8	22	22	39.5	6		
600020604	3/8	1/4	19	22	37.5	4.5		
600020608	3/8	1/2	27	27	43.5	6.5		
600020804	1/2	1/4	19	27	40.5	4.5		
600020806	1/2	3/8	22	27	44	6		
600020812	1/2	3/4	32	32	50	8.5		
600021208	3/4	1/2	27	32	49.5	6.5		
600021612	1"	3/4	32	41	57	8.5		

ADAPTER 90° CYLINDRICAL MALE
CONED 60° FEMALE CAP
SURFACE 60°
英制外螺纹 60° 内锥密封 / 英制内螺纹 90° 弯接头

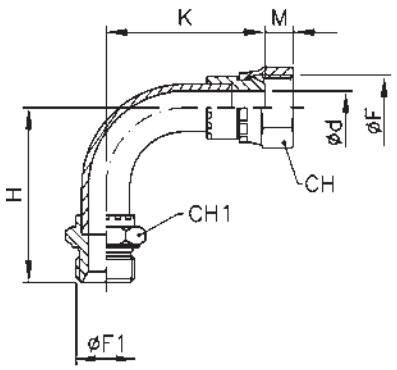

订货型号	Ø F GAS	Ø F1 GAS	CH	CH1	H ≈	K ≈	Ø d	M
600030404	1/4	1/4	19	19	37	32.5	5	4.5
600030606	3/8	3/8	22	22	44.5	41.5	7	6
600030808	1/2	1/2	27	27	50.5	46.5	10	6.5
600031010	5/8	5/8	28	30	57	53	12.5	9.5
600031212	3/4	3/4	32	32	62.5	57.5	15.5	8.5
600031616	1"	1"	38/41	41	75.5	67	20	10.5
600032020	1" 1/4	1" 1/4	50	50	85.5	77	26	10

JIC MALE 74° CONESAE J514
美制 UNF 外螺纹 74° 外锥面直接头

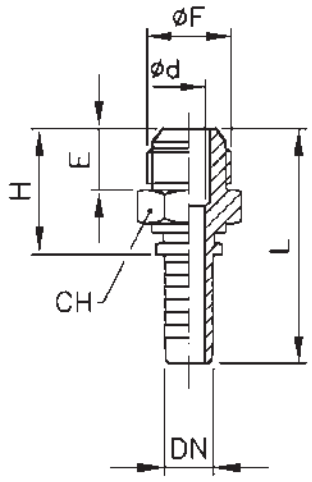

订货型号	Ø 管外径		Ø F	CH	L	H	Ø d	E
	英寸	mm						
600440704	1/4	6	7/16	14	54.8	27.5	4	14
600440804	1/4	6	1/2	14	54.8	27.5	4	14
600440904	1/4	6	9/16	17	55	27.7	4	14.1
600440905	5/16	8	9/16	17	57	28.5	5.5	14.1
600440906	3/8	10	9/16	17	57	28.5	7	14.1
600441206	3/8	10	3/4	19	60.5	32	7	16.7
600441208	1/2	13	3/4	19	62.5	32.5	10	16.7
600441406	3/8	10	7/8	24	64.5	36	7	19.3
600441408	1/2	13	7/8	24	66.5	36.5	10	19.3
600441410	5/8	16	7/8	24	69.5	36.5	12.5	19.3
600441708	1/2	13	1" 1/16	27	68.5	38.5	10	21.9
600441710	5/8	16	1" 1/16	27	71	38.5	12.5	21.9
600441712	3/4	19	1" 1/16	27	78.5	39.5	15.5	21.9
600442112	3/4	19	1" 5/16	36	80.5	41.5	15.5	23.1
600442116	1"	25	1" 5/16	36	94.5	42	20	23.1
600442620	1" 1/4	32	1" 5/8	46	108.5	48.5	26	24.3
600443024	1" 1/2	38	1" 7/8	50	123.5	53.5	32	27.5

NPTF MALE
60° CONE SEAT
SAE J516
美制 NPTF 外螺纹直接头

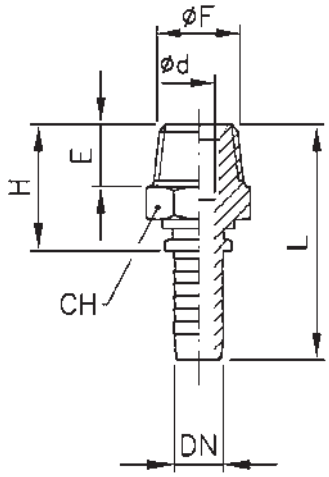

订货型号	Ø 管外径		Ø F	CH	L	H	Ø d	E
	英寸	mm						
600240204	1/4	6	1/8	12	48.8	21.5	4	10
600240404	1/4	6	1/4	14	53.8	26.5	4	14.2
600240604	1/4	6	3/8	19	54.8	27.5	4	14.2
600240606	3/8	10	3/8	19	56.5	28	7	14.2
600240608	1/2	13	3/8	19	58.5	28.5	10	14.2
600240806	3/8	10	1/2	22	62.5	34	7	19
600240808	1/2	13	1/2	22	64.5	34.5	10	19
600240810	5/8	16	1/2	22	67.5	34.5	12.5	19
600241210	5/8	16	3/4	27	69.5	36.5	12.5	19
600241212	3/4	19	3/4	27	76.5	37.5	15.5	19
600241616	1"	25	1"	36	96	43.5	20	23.9
600242020	1" 1/4	32	1" 1/4	46	106.5	46.5	26	24.6
600242424	1" 1/2	38	1" 1/2	50	120	50	32	25.4
600243232	2"	50	2"	65	129	54.5	44	26.5

JIC FEMALE 74° CONE SEAT - SAE J514 CRIMPED - BACK NUT
美制 uNF 内螺纹 74° 外锥面直接头

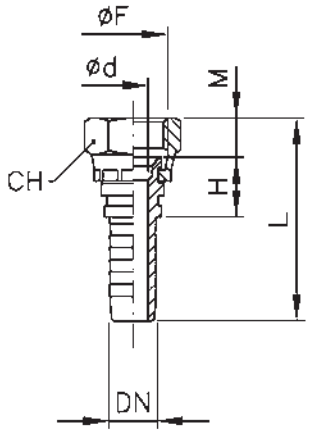

订货型号	Ø 管外径		Ø F	CH	Ø d	H	L	M
	英寸	mm						
600410704	1/4	6	7/16	17	4	14.7	49.5	7.5
600410804	1/4	6	1/2	19	4	16.7	52.5	8.5
600410805	5/16	8	1/2	19	5.5	16.7	53.7	8.5
600410904	1/4	6	9/16	19	4	16.7	53.5	9.5
600410905	5/16	8	9/16	19	5.5	18	56	9.5
600410906	3/8	10	9/16	19	7	18	56	9.5
600411206	3/8	10	3/4	24	7	20	60	11.5
600411208	1/2	13	3/4	24	10	21	62.5	11.5
600411406	3/8	10	7/8	27	7	19.5	62	14
600411408	1/2	13	7/8	27	10	20.5	64.5	14
600411410	5/8	16	7/8	27	12.5	20.5	67.5	14
600411708	1/2	13	1" 1/16	32	10	21.5	66	14.5
600411710	5/8	16	1" 1/16	32	12.5	22	69.5	14.5
600411712	3/4	19	1" 1/16	32	15.5	23.5	77	14.5
600412112	3/4	19	1" 5/16	38	15.5	24.5	78	14.5
600412116	1"	25	1" 5/16	38	20	25	92	14.5
600412620 (2)	1" 1/4	32	1" 5/8	50	26	29	105.5	16.5
600413024 (2)	1" 1/2	38	1" 7/8	55	32	29.5	117.5	18
600414032 (2)	2"	50	2" 1/2	75	44	35.5	134	24

90° JIC FEMALE SWEPT ELBOW 74° CONE - SEAT SAE J514 CRIMPED - BACK NUT
美制 uNF 内螺纹 74° 外锥 90° 弯接头

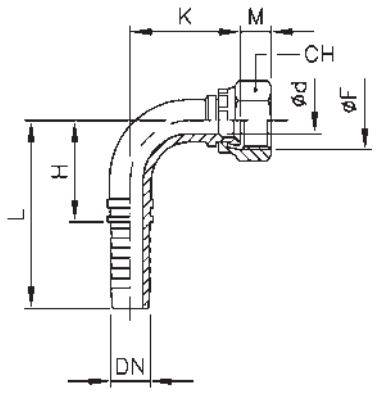

订货型号	Ø 管外径		Ø F	CH	Ø d	H ≈	L ≈	K ≈	M
	英寸	mm							
600420704	1/4	6	7/16	17	4	23	50.5	26	7.5
600420804	1/4	6	1/2	19	4	23	50.5	28.5	8.5
600420904	1/4	6	9/16	19	4	23	50.5	28.5	9.5
600420905	5/16	8	9/16	19	5.5	26	54.5	30.5	9.5
600420906	3/8	10	9/16	19	7	30.5	59	35	9.5
600421206	3/8	10	3/4	24	7	30.5	59	38	11.5
600421208	1/2	13	3/4	24	10	38	68	42	11.5
600421406	3/8	10	7/8	27	7	30.5	59	37.5	14
600421408	1/2	13	7/8	27	10	38	68	41.5	14
600421410	5/8	16	7/8	27	12.5	44.5	77.5	48	14
600421710	5/8	16	1" 1/16	32	12.5	44.5	77.5	49.5	14.5
600421712	3/4	19	1" 1/16	32	15.5	54	93	56	14.5
600422112	3/4	19	1" 5/16	38	15.5	54	93	59	14.5
600422116	1"	25	1" 5/16	38	20	74.5	127	69	14.5
600422620 (2)	1" 1/4	32	1" 5/8	50	26	80	140	84.5	16.5
600423024 (2)	1" 1/2	38	1" 7/8	55	32	104	174	98	18

45° JIC FEMALE SWEPT ELBOW 74° CONE SEAT - SAE J514 CRIMPED - BACK NUT
美制 UNF 内螺纹 74° 外锥 45° 弯接头

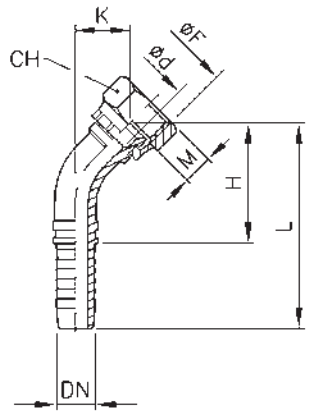

订货型号	Ø 管外径		Ø F	CH	Ø d	H ≈	L ≈	K ≈	M
	英寸	mm							
600430704	1/4	6	7/16	17	4	36	63.5	13.5	7.5
600430804	1/4	6	1/2	19	4	38	65.5	15	8.5
600430904	1/4	6	9/16	19	4	38	65.5	15	9.5
600430905	5/16	8	9/16	19	5.5	42.5	71	15.5	9.5
600430906	3/8	10	9/16	19	7	49	77.5	17.5	9.5
600431206	3/8	10	3/4	24	7	51	79.5	19.5	11.5
600431208	1/2	13	3/4	24	10	60.5	90.5	20.5	11.5
600431408	1/2	13	7/8	27	10	60.5	90.5	20	14
600431410	5/8	16	7/8	27	12.5	70	103	23	14
600431710	5/8	16	1" 1/16	32	12.5	71	104	24	14.5
600431712	3/4	19	1" 1/16	32	15.5	62.5	101.5	26.5	14.5
600432116	1"	25	1" 5/16	38	20	84.5	137	32	14.5
600432620 (2)	1" 1/4	32	1" 5/8	50	26	97	157	39.5	16.5
600433024 (2)	1" 1/2	38	1" 7/8	55	32	110	180	44.5	18

90° JIC FEMALE COMPACT ELBOW 74° CONE SEAT - SAE J514
90° 美制 UNF 短身内螺纹接头

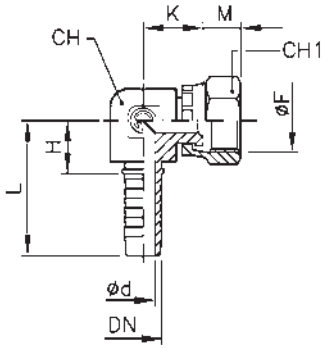

订货型号	Ø 管外径		Ø F	CH	H	M	Ø d	K	CH1	L
	英寸	mm								
600500704	1/4	6	7/16	14	17.5	7.5	4	19	17	44.8
600500904	1/4	6	9/16	14	20	9.5	4	21	19	47.3
600500906	3/8	10	9/16	17	20	9.5	7	22.5	19	48.5
600501206	3/8	10	3/4	24	23.5	11.5	7	30	24	52
600501208	1/2	13	3/4	24	23.5	11.5	10	30	24	53.5
600501408	1/2	13	7/8	24	23.5	14	10	30	27	53.5
600501712	3/4	19	1" 1/16	27	28	14.5	15.5	34.5	32	67
600502116	1"	25	1" 5/16	36	31.7	14.5	20	38.5	38	84.2

ORFS MALE SAE J1453
美制 ORFS 外螺纹平面密封直接头

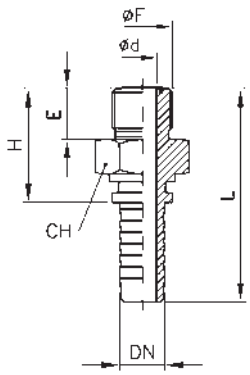

订货型号	Ø 管外径		Ø F	CH1	H	Ø d	E	L	
	英寸	mm							
600100404	1/4	6	9/16	17	25.7	4	10	53	
600100606	3/8	10	11/16	19	28.5	7	11	57	
600100808	1/2	12	13/16	22	32.5	10	13	62.5	
600101010	5/8	16	1"	27	37	12.5	15.5	70	
600101212	3/4	19	1" 3/16	32	40.5	15.5	17	79.2	
600101616	1"	25	1" 7/16	38	43	20	17.5	95.5	
600102020	1" 1/4	31	1" 11/16	46	46.5	26	17.5	106.5	

ORFS FEMALE SAE J1453 CRIMPED - BACK NUT
美制 ORFS 内螺纹平面密封直接头

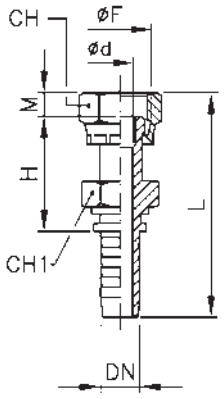

订货型号	Ø 管外径		Ø F	CH1	M	H	Ø d	L	CH
	英寸	mm							
600110404	1/4	6	9/16	14	8	28	4	63	17
600110604	1/4	6	11/16	17	9.5	30.5	4	67.5	22
600110605	5/16	8	11/16	17	9.5	31	5.5	69	22
600110606	3/8	10	11/16	17	9.5	31	7	69	22
600110808	1/2	13	13/16	19	11	36.5	10	77	24
600111008	1/2	13	1"	24	13.5	39.5	10	82.5	30
600111010	5/8	16	1"	24	13.5	39.5	12.5	85.5	30
600111212	3/4	19	1" 3/16	30	14.5	43.5	15.5	97	36
600111616	1"	25	1" 7/16	36	15	46.5	20	114	41
600112020	1" 1/4	32	1" 11/16	41	15	49	26	124	50

90° ORFS FEMALE SAE J1453 (SLIP-ON NUT)
美制 ORFS 内螺纹平面密封 90° 弯接头

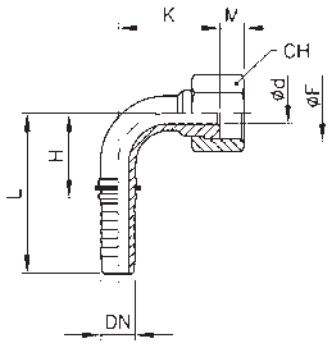

订货型号	Ø 管外径		Ø F	CH	M	H ≈	Ø d	K ≈	L ≈
	英寸	mm							
600120404	1/4	6	9/16	17	8	27.5	4	24	54.8
600120606	3/8	10	11/16	22	9.5	32	7	29.5	60.5
600120808	1/2	13	13/16	24	11	40.5	10	36.5	70.5
600121008	1/2	13	1"	30	13.5	40.5	10	38	70.5
600121010	5/8	16	1"	30	13.5	48	12.5	42.5	81
600121212	3/4	19	1" 3/16	36	14.5	56.5	15.5	48	95.5
600121616	1"	25	1" 7/16	41	15	71.5	20	58.5	124
600122020	1" 1/4	32	1" 11/16	50	15	83	26	67.5	143

45° ORFS FEMALE SAE J1453
(SLIP-ON NUT)
美制 ORFS 内螺纹平面密封 45° 弯接头

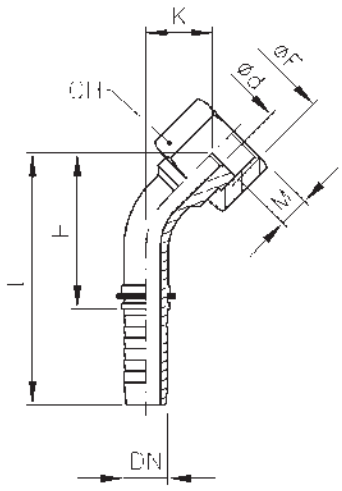

订货型号	Ø 管外径		Ø F	CH	M	H ≈	Ø d	K ≈	L ≈
	英寸	mm							
600130404	1/4	6	9/16	17	8	41.3	4	12	68.5
600130606	3/8	10	11/16	22	9.5	49	7	13	77.5
600130808	1/2	13	13/16	24	11	61.5	10	17	91.5
600131010	5/8	16	1"	30	13.5	72	12.5	19	105
600131212	3/4	19	1" 3/16	36	14.5	60.5	15.5	21.5	99.5
600131616	1"	25	1" 7/16	41	15	70.5	20	25	123
600132020	1" 1/4	32	1" 11/16	50	15	81	26	27	141

SAE J518
STRAIGHT FLANGE 3000 PSI
SAE J518 法兰 3000 PSI 轻系列直法兰

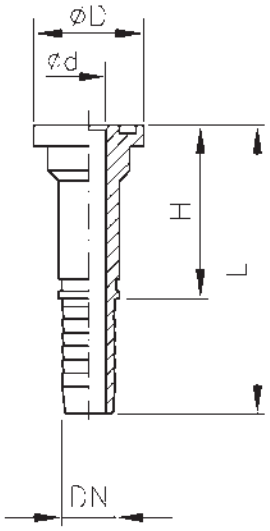

订货型号	Ø 管外径		Ø FLANGIA	Ø D	Ø d	H	L
	英寸	mm					
600353008	1/2	13	1/2	30.2	10	51	81
600353808	1/2	13	3/4	38.1	10	57.5	87.5
600353812	3/4	19	3/4	38.1	15.5	58	97
600354412	3/4	19	1"	44.5	15.5	58	97
600354416	1"	25	1"	44.5	20	64.5	117
600355116	1"	25	1" 1/4	50.8	20	70.5	123
600355120	1" 1/4	32	1" 1/4	50.8	26	70.5	130.5
600356020	1" 1/4	32	1" 1/2	60.3	26	72.5	132.5
600356024	1" 1/2	38	1" 1/2	60.3	32	75.5	145.5
600357124	1" 1/2	38	2"	71.4	32	75.5	145.5
6003S7132	2"	50	2"	71.4	44	79	153.5

90° SAE J518
FLANGE 3000 PSI
SAE J518 法兰 3000 PSI 轻系列 90° 弯法兰

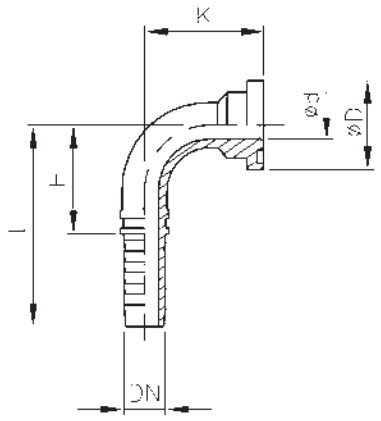

订货型号	Ø 管外径		Ø	Ø D	Ø d	H ≈	L ≈	K ≈
	英寸	mm						
600363008	1/2	13	1/2	30.2	10	54.5	84.5	40
600363808	1/2	13	3/4	38.1	10	54.5	84.5	44
600363812	3/4	19	3/4	38.1	15.5	64.5	103.5	52
600364412	3/4	19	1"	44.5	15.5	64.5	103.5	54
600364416	1"	25	1"	44.5	20	77.5	130	62
600365116	1"	25	1" 1/4	50.8	20	77.5	130	63.5
600365120	1" 1/4	32	1" 1/4	50.8	26	93.5	153.5	75
600366020	1" 1/4	32	1" 1/2	60.3	26	93.5	153.5	77
600366024	1" 1/2	38	1" 1/2	60.3	32	111	181	89
600367124	1" 1/2	38	2"	71.4	32	111	181	89
600367132	2"	50	2"	71.4	44	129	203.5	112

45° SAE J518
FLANGE 3000 PSI
SAE J518 法兰 3000 PSI 轻系列 45° 弯法兰

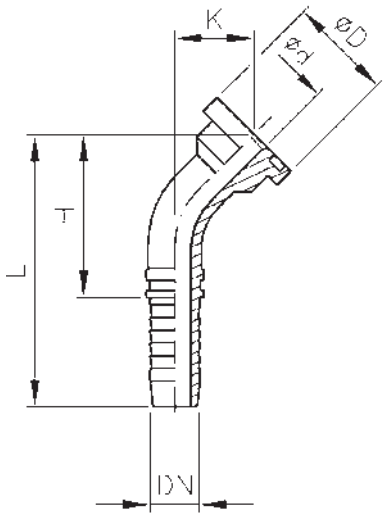

订货型号	Ø 管外径		Ø FLANGIA	Ø D	Ø d	H ≈	L ≈	K ≈
	英寸	mm						
600373008	1/2	13	1/2	30.2	10	58.5	88.5	19.5
600373808	1/2	13	3/4	38.1	10	59.5	89.5	22
600373812	3/4	19	3/4	38.1	15.5	68.5	107.5	24
600374412	3/4	19	1"	44.5	15.5	68.5	107.5	25.5
600374416	1"	25	1"	44.5	20	82	134.5	27.5
600375116	1"	25	1" 1/4	50.8	20	82	134.5	28.5
600375120	1" 1/4	32	1" 1/4	50.8	26	95.5	155.5	32
600376020	1" 1/4	32	1" 1/2	60.3	26	97	157	33.5
600376024	1" 1/2	38	1" 1/2	60.3	32	111	181	37
600377124	1" 1/2	38	2"	71.4	32	111	181	38
600377132	2"	50	2"	71.4	44	124	198.5	41.5

SAE J518
STRAIGHT FLANGE 6000 PSI
SAE J518 法兰 6000 PSI 重系列直法兰

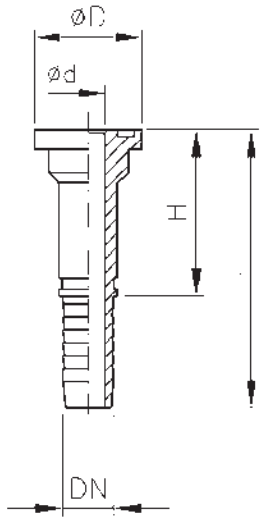

订货型号	Ø 管外径		Ø FLANGIA	Ø D	Ø d	H	L	
	英寸	mm						
600383208	1/2	13	1/2	31.7	10	52	82	
600384108	1/2	13	3/4	41.3	10	68.5	98.5	
600384112	3/4	19	3/4	41.3	15.5	69	108	
600384712	3/4	19	1"	47.6	15.5	81	120	
600384716	1"	25	1"	47.6	20	82	134.5	
600385416	1"	25	1" 1/4	54	20	89	141.5	
600385420	1" 1/4	32	1" 1/4	54	26	84.5	144.5	
600386320	1" 1/4	32	1" 1/2	63.5	26	90.5	150.5	
600386324	1" 1/2	38	1" 1/2	63.5	32	92.5	162.5	
600387932	2"	50	2"	79.4	44	107	181.5	

90° SAE J518
FLANGE 6000 PSI
SAE J518 法兰 6000 PSI 重系列 90° 弯法兰

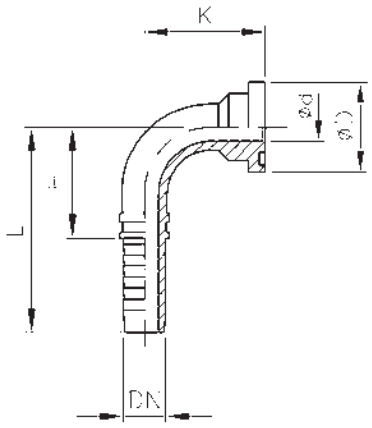

订货型号	Ø 管外径		Ø FLANGIA	Ø D	Ø d	H ≈	L ≈	K ≈
	英寸	mm						
600393208	1/2	13	1/2	31.7	10	54.5	84.5	45
600394108	1/2	13	3/4	41.3	10	54.5	84.5	53
600394112	3/4	19	3/4	41.3	15.5	64	103	61
600394712	3/4	19	1"	47.6	15.5	64.5	103.5	67
600394716	1"	25	1"	47.6	20	74.5	127	73
600395416	1"	25	1" 1/4	54	20	74.5	127	80
600395420	1" 1/4	32	1" 1/4	54	26	88.5	148.5	91
600396320	1" 1/4	32	1" 1/2	63.5	26	88.5	148.5	99.5
600396324	1" 1/2	38	1" 1/2	63.5	32	108	178	107.5
600397932	2"	50	2"	79.4	44	134	208.5	132

45° SAE J518
FLANGE 6000 PSI
SAE J518 法兰 6000 PSI 重系列 45° 弯法兰

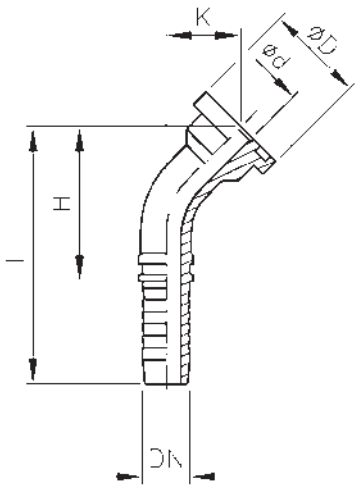

订货型号	Ø 管外径		Ø FLANGIA	Ø D	Ø d	H ≈	L ≈	K ≈
	英寸	mm						
600403208	1/2	13	1/2	31.7	10	62	92	22
600404108	1/2	13	3/4	41.3	10	68	98	27.5
600404112	3/4	19	3/4	41.3	15.5	74	113	29.5
600404712	3/4	19	1"	47.6	15.5	79	118	33.5
600404716	1"	25	1"	47.6	20	84	136.5	34
600405416	1"	25	1" 1/4	54	20	89	141.5	39
600405420	1" 1/4	32	1" 1/4	54	26	102	162	43.5
600406320	1" 1/4	32	1" 1/2	63.5	26	108	168	49
600406324	1" 1/2	38	1" 1/2	63.5	32	121	191	50
600407932	2"	50	2"	79.4	44	147.5	222	60.5

WASH CLEANER
FEMALE (SLIP-ON NUT)
内螺纹清洗直接头

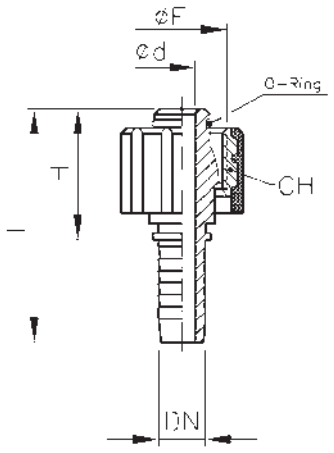

订货型号	Ø 管外径		Ø F	L	H	Ø d			
	英寸	mm							
600341404	1/4	6	22 × 1.5	61.3	34	4			
600341405	5/16	8	22 × 1.5	62.5	34	5.5			
600341406	3/8	10	22 × 1.5	62.5	34	7			

METRIC MALE 60° CONE SEAT DIN 3853/3863
公制外螺纹 60° 内锥面密封直接头

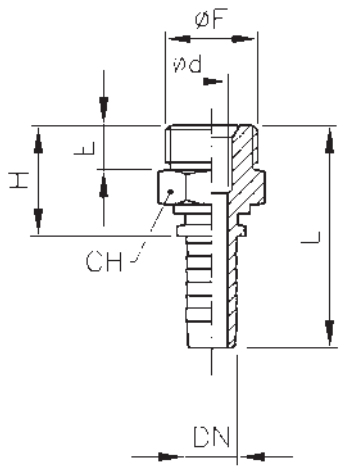

订货型号	Ø 管外径		Ø F	CH	Ø d	E	H	L
	英寸	mm						
600301204	1/4	6	M12 × 1.5	14	4	10	21.5	48.8
600301404	1/4	6	M14 × 1.5	17	4	10	21.5	48.8
600301806	3/8	10	M18 × 1.5	22	7	11	23.5	52
600302208	1/2	13	M22 × 1.5	24	10	12	25.5	55.5
600302610	5/8	16	M26 × 1.5	27	12.5	12	26	59
600303012	3/4	19	M30 × 1.5	32	15.5	14	29	68
600303816	1"	25	M38 × 1.5	41	20	14	31.5	84

METRIC FEMALE 60° CONE - DIN 3863
CRIMPED - BACK NUT
公制内螺纹 60° 外锥面密封直接头

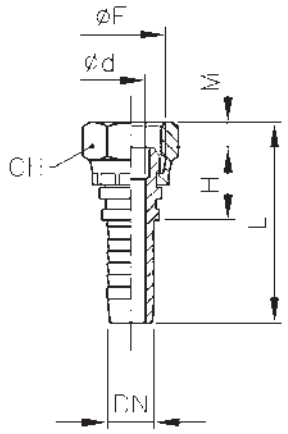

订货型号	Ø 管外径		Ø F	CH	Ø d	H	L	M
	英寸	mm						
600261204	1/4	6	M12 × 1.5	19	4	17	48.5	4.5
600261404	1/4	6	M14 × 1.5	19	4	18	49	3.5
600261604	1/4	6	M16 × 1.5	22	4	19	51.5	5.5
600261605	5/16	8	M16 × 1.5	22	5.5	20	54	5.5
600261805	5/16	8	M18 × 1.5	24	5.5	22	54.5	4
600261606	3/8	10	M16 × 1.5	22	7	20	54	5.5
600261806	3/8	10	M18 × 1.5	24	7	22	54.5	4
600262006	3/8	10	M20 × 1.5	27	7	22	56.5	6
600262206	3/8	10	M22 × 1.5	27	7	25.5	57.5	4.5
600262008	1/2	13	M20 × 1.5	27	10	22.5	58.5	6
600262208	1/2	13	M22 × 1.5	27	10	25	58.5	4.5
600262610	5/8	16	M26 × 1.5	32	12.5	24	63.5	6.5
600262612	3/4	19	M26 × 1.5	32	15.5	25.5	71	6.5
600263012	3/4	19	M30 × 1.5	36	15.5	30	74.5	5.5
600263816 (2)	1"	25	M38 × 1.5	46	20	33.5	92.5	6.5
600264520 (2)	1" 1/4	32	M45 × 1.5	55	26	37.5	102.5	5

METRIC FEMALE
24° / 60° CONE DIN 3868
公制内螺纹 60° 外锥面密封套螺母直接头

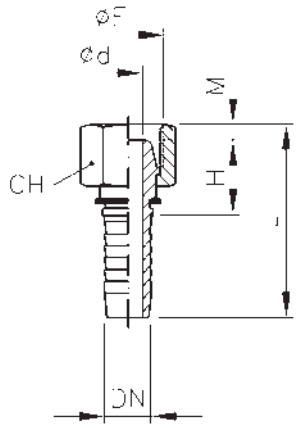

订货型号	Ø 管外径		Ø DIN	Ø F	CH	Ø d	H	L	M
	英寸	mm							
600261404A	1/4	6	8 L	M14 × 1.5	17	4	19.5	50.6	3.8
600261604A	1/4	6	10 L	M16 × 1.5	19	4	19.5	50.8	4
600261605A	5/16	8	10 L	M16 × 1.5	19	5.5	19.5	52	4
600261806A	3/8	10	12 L	M18 × 1.5	22	7	20	52.5	4
600262208A	1/2	13	15 L	M22 × 1.5	27	10	21.5	56.7	5.2
600262610A	5/8	16	18 L	M26 × 1.5	32	12.5	22	60.5	5.5

90° METRIC FEMALE SWEPT ELBOW - 60° CONE
DIN 3863 CRIMPED BACK NUT
公制内螺纹 60° 外锥面密封 90° 弯接头

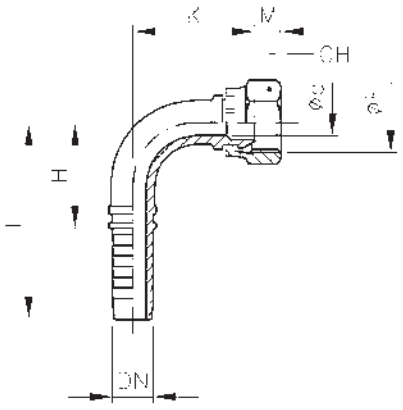

订货型号	Ø 管外径		Ø F	CH	Ø d	H ≈	L ≈	K ≈	M
	英寸	mm							
600271404	1/4	6	M14 × 1.5	19	4	23	50.5	29	3.5
600271604	1/4	6	M16 × 1.5	22	4	23	50.5	31	5.5
600271605	5/16	8	M16 × 1.5	22	5.5	26	54.5	32.5	5.5
600271805	5/16	8	M18 × 1.5	24	5.5	26	54.5	34.5	4
600271606	3/8	10	M16 × 1.5	22	7	30.5	59	37	5.5
600271806	3/8	10	M18 × 1.5	24	7	30.5	59	39	4
600272006	3/8	10	M20 × 1.5	27	7	30.5	59	39.5	6
600272206	3/8	10	M22 × 1.5	27	7	30.5	59	43	4.5
600272008	1/2	13	M20 × 1.5	27	10	38	68	43.5	6
600272208	1/2	13	M22 × 1.5	27	10	38	68	47	4.5
600272610	5/8	16	M26 × 1.5	32	12.5	44.5	77.5	51.5	6.5
600272612	3/4	19	M26 × 1.5	32	15.5	54	93	58	6.5
600273012	3/4	19	M30 × 1.5	36	15.5	54	93	64.5	5.5
600273816 (2)	1"	25	M38 × 1.5	46	20	74	126.5	79.5	6.5

90° METRIC FEMALE SWEPT ELBOW
24° / 60° CONE - DIN 3868
公制内螺纹 60° 外锥面密封套螺母 90° 弯接头

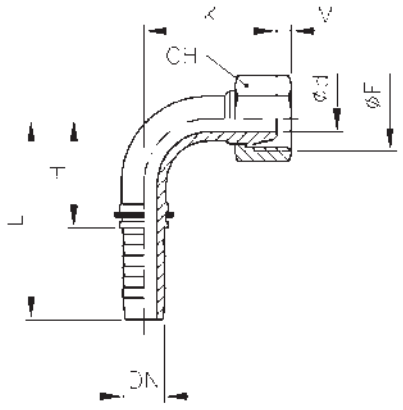

订货型号	Ø 管外径		Ø DIN	Ø F	CH	Ø d	H ≈	L ≈	K ≈	M
	英寸	mm								
600271404A	1/4	6	8 L	M14 × 1.5	17	4	29.5	56.8	29.5	3.8
600271605A	5/16	8	10 L	M16 × 1.5	19	5.5	32	60.5	30.5	4
600271806A	3/8	10	12 L	M18 × 1.5	22	7	36.5	65	34.5	4
600272208A	1/2	13	15 L	M22 × 1.5	27	10	45	75	40	5.2
600272610A	5/8	16	18 L	M26 × 1.5	32	12.5	51.5	84.5	50	5.5

45° METRIC FEMALE SWEPT ELBOW
60° CONE - DIN 3863 CRIMPED BACK NUT
公制内螺纹 60° 外锥面密封 45° 弯接

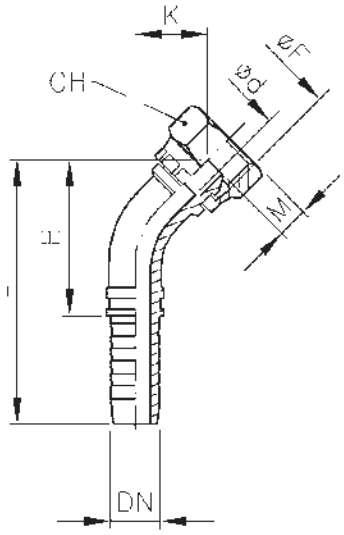

订货型号	Ø 管外径		Ø F	CH	Ø d	H ≈	L ≈	K ≈	M
	英寸	mm							
600281404	1/4	6	M14 × 1.5	19	4	38	65.5	15.5	3.5
600281604	1/4	6	M16 × 1.5	22	4	39.5	67	17	5.5
600281605	5/16	8	M16 × 1.5	22	5.5	44	72.5	17	5.5
600281805	5/16	8	M18 × 1.5	24	5.5	45	73.5	18.5	4
600281606	3/8	10	M16 × 1.5	22	7	50	78.5	19	5.5
600281806	3/8	10	M18 × 1.5	24	7	51.5	80	20	4
600282006	3/8	10	M20 × 1.5	27	7	52	80.5	20.5	6
600282206	3/8	10	M22 × 1.5	27	7	54	82.5	23	4.5
600282008	1/2	13	M20 × 1.5	27	10	62	92	21.5	6
600282208	1/2	13	M22 × 1.5	27	10	64	94	24	4.5
600282610	5/8	16	M26 × 1.5	32	12.5	72.5	105.5	25.5	6.5
600282612	3/4	19	M26 × 1.5	32	15.5	64	103	28	6.5
600283012	3/4	19	M30 × 1.5	36	15.5	68.5	107.5	32.5	5.5
600283816 (2)	1"	25	M38 × 1.5	46	20	91.5	144	39.5	6.5

45° METRIC FEMALE SWEPT
ELBOW - 24° / 60° CONE DIN 3868
公制内螺纹 60° 外锥面密封带套螺母 45° 弯接头

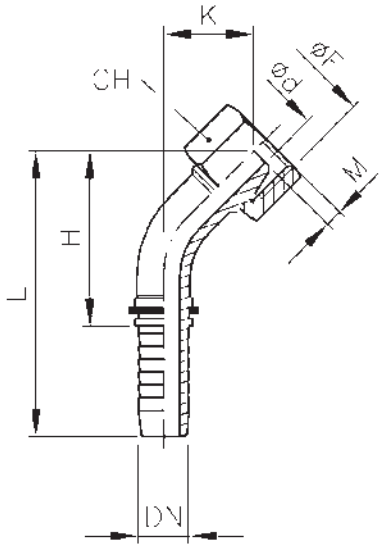

订货型号	Ø 管外径		Ø DIN	Ø F	CH	Ø d	H ≈	L ≈	K ≈	M
	英寸	mm								
600281404A	1/4	6	8 L	M14 × 1.5	17	4	48.5	63.8	15.5	3.8
600281605A	5/16	8	10 L	M16 × 1.5	19	5.5	51	67.5	15.5	4
600281806A	3/8	10	12 L	M18 × 1.5	22	7	57.5	70.5	17	5.2
600282208A	1/2	13	15 L	M22 × 1.5	27	10	68	79.5	18.5	5.2

METRIC MALE 24° CONE
SEAT L.T. - DIN 3853/3861 SERIES L DIN 2353
公制外螺纹 24° 内锥面轻系列直接头 DIN 3853/3861

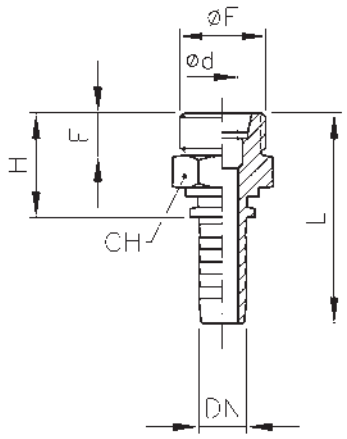

订货型号	Ø 管外径		Ø DIN	Ø F	CH	Ø d	H	L	E
	英寸	mm							
600600604	1/4	6	6 L	M12 × 1.5	14	4	21.7	49	10
600600804	1/4	6	8 L	M14 × 1.5	14	4	21.7	49	10
600601004	1/4	6	10 L	M16 × 1.5	17	4	22.7	50	11
600601005	5/16	8	10 L	M16 × 1.5	17	5.5	23.5	52	11
600601006	3/8	10	10 L	M16 × 1.5	17	7	22.7	51.2	11
600601205	5/16	8	12 L	M18 × 1.5	19	5.5	24.5	53	11
600601206	3/8	10	12 L	M18 × 1.5	19	7	24.5	53	11
600601506	3/8	10	15 L	M22 × 1.5	22	7	26	54.5	12
600601508	1/2	13	15 L	M22 × 1.5	22	10	26	56	12
600601810	5/8	16	18 L	M26 × 1.5	27	12.5	27	60	12
600602212	3/4	19	22 L	M30 × 2	32	15.5	30	69	14
600602816	1"	25	28 L	M36 × 2	41	20	32.5	85	14
600603520	1" 1/4	32	35 L	M45 × 2	46	26	39	99	16
600604224	1" 1/2	38	42 L	M52 × 2	55	32	41	111	16

O-RING METRIC FEMALE 24° CONE L.T. - DIN 3865
SERIES L DIN 2353 SLIP-ON NUT
公制内螺纹 24° 外锥面带 O 型圈密封轻系列直接头 DIN 3865

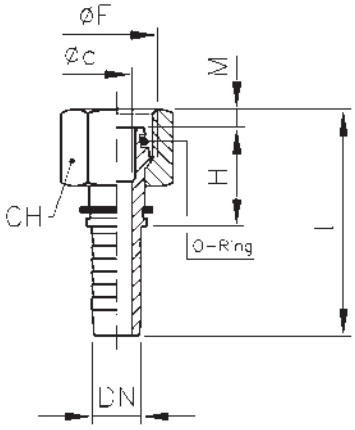

订货型号	Ø 管外径		Ø DIN	Ø F	CH	Ø d	H	L	M
	英寸	mm							
600620604 (2)	1/4	6	6 L	M12 × 1.5	19	3.5	20.7	48	0.5
600620804	1/4	6	8 L	M14 × 1.5	17	4	24.2	51.5	-
600621004	1/4	6	10 L	M16 × 1.5	19	4	24.5	51.8	-
600621005	5/16	8	10 L	M16 × 1.5	19	5.5	24.5	53	-
600621205	5/16	8	12 L	M18 × 1.5	22	5.5	30	58.5	-
600621206	3/8	10	12 L	M18 × 1.5	22	7	30	58.5	-
600621508	1/2	13	15 L	M22 × 1.5	27	10	30.5	61	0.5
600621810	5/8	16	18 L	M26 × 1.5	32	12.5	30.5	65	1.5
600622212	3/4	19	22 L	M30 × 2	36	15.5	33	75	3
600622816	1"	25	28 L	M36 × 2	41	20	37	92	2.5
600623520	1" 1/4	32	35 L	M45 × 2	50	26	38.5	101	2.5
600624224	1" 1/2	38	42 L	M52 × 2	60	32	41	113.5	2.5

90° O-RING METRIC FEMALE SWEPT ELBOW
24° CONE L.T. - DIN 3865 SERIES L DIN 2353 - SLIP-ON NUT
公制内螺纹 24° 外锥面带 O 型圈密封轻系列 90° 弯接头 DIN 3865

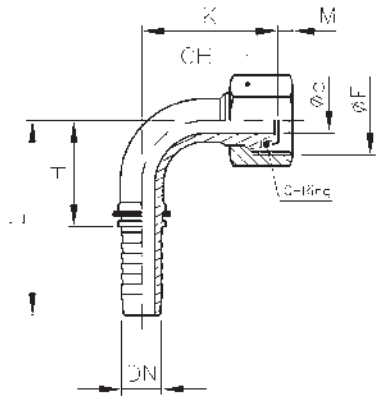

订货型号	Ø 管外径		Ø DIN	Ø F	CH	Ø d	H ≈	L ≈	K ≈	M
	英寸	mm								
600630604 (2)	1/4	6	6 L	M12 × 1.5	19	3.5	22.7	50	33	0.5
600630804	1/4	6	8 L	M14 × 1.5	17	4	24	51.5	32	-
600631004	1/4	6	10 L	M16 × 1.5	19	4	24	51.5	33	-
600631005	5/16	8	10 L	M16 × 1.5	19	5.5	27	55.5	35	-
600631205	5/16	8	12 L	M18 × 1.5	22	5.5	27	55.5	35	-
600631206	3/8	10	12 L	M18 × 1.5	22	7	31.5	60	39.5	-
600631508	1/2	13	15 L	M22 × 1.5	27	10	39	69	44	0.5
600631810	5/8	16	18 L	M26 × 1.5	32	12.5	45.5	78.5	51.5	1.5
600632212	3/4	19	22 L	M30 × 2	36	15.5	55	94	56	3
600632816	1"	25	28 L	M36 × 2	41	20	75.5	128	69	2.5
600633520	1" 1/4	32	35 L	M45 × 2	50	26	81	141	81	2.5
600634224	1" 1/2	38	42 L	M52 × 2	60	32	102	172	92	2.5

45° O-RING METRIC FEMALE SWEPT ELBOW
24° CONE L.T. - DIN 3865 SERIES L DIN 2353
公制内螺纹 24° 外锥面带 O 型圈密封轻系列 45° 弯接头 DIN 3865

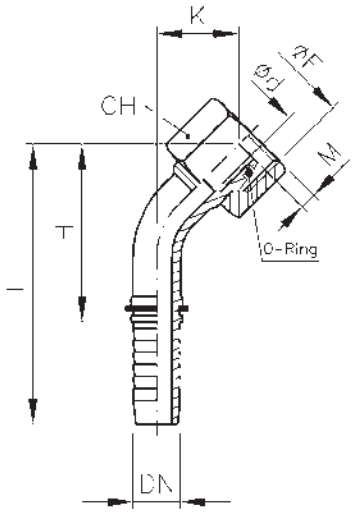

订货型号	Ø 管外径		Ø DIN	Ø F	CH	Ø d	H ≈	L ≈	K ≈	M
	英寸	mm								
600640804	1/4	6	8 L	M14 × 1.5	17	4	41	68.5	17.5	-
600641004	1/4	6	10 L	M16 × 1.5	19	4	41.5	69	19	-
600641005	5/16	8	10 L	M16 × 1.5	19	5.5	47	75.5	19	-
600641205	5/16	8	12 L	M18 × 1.5	22	5.5	47	75.5	19	-
600641206	3/8	10	12 L	M18 × 1.5	22	7	53	81.5	20.5	-
600641508	1/2	13	15 L	M22 × 1.5	27	10	63	93	22	0.5
600641810	5/8	16	18 L	M26 × 1.5	32	12.5	73.5	106.5	25.5	1.5
600642212	3/4	19	22 L	M30 × 2	36	15.5	87	126	27	3
600642816	1"	25	28 L	M36 × 2	41	20	85	137.5	32	2.5
600643520	1" 1/4	32	35 L	M45 × 2	50	26	95	155	37	2.5
600644224	1" 1/2	38	42 L	M52 × 2	60	32	107	177	40	2.5

METRIC MALE 24° CONE
SEAT H.T. - DIN 3853/3861 SERIES S DIN 2353
公制外螺纹 24° 内锥面重系列 45° 直接头 DIN 3853/3861

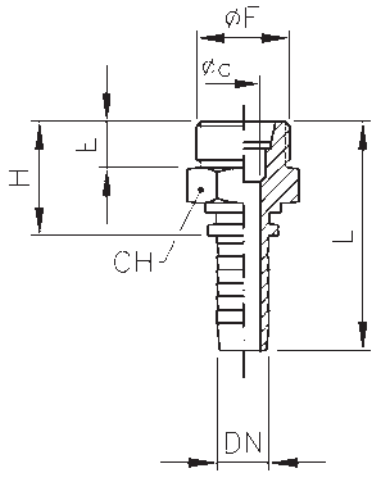

订货型号	Ø 管外径		Ø DIN	Ø F	CH	Ø d	H	L	E
	英寸	mm							
600610804	1/4	6	8 S	M16 × 1.5	17	4	25.7	53	12
600611004	1/4	6	10 S	M18 × 1.5	19	4	26.7	54	12
600611205	5/16	8	12 S	M20 × 1.5	22	5.5	28.5	57	12
600611206	3/8	10	12 S	M20 × 1.5	22	7	28.5	57	12
600611406	3/8	10	14 S	M22 × 1.5	24	7	30.5	59	14
600611408	1/2	13	14 S	M22 × 1.5	24	10	31	61	14
600611608	1/2	13	16 S	M24 × 1.5	27	10	31	61	14
600612010	5/8	16	20 S	M30 × 2	32	12.5	35	68	16
600612012	3/4	19	20 S	M30 × 2	32	15.5	36	75	16
600612512	3/4	19	25 S	M36 × 2	41	15.5	40	79	18
600612516	1"	25	25 S	M36 × 2	41	20	40.5	93	18
600613016	1"	25	30 S	M42 × 2	46	20	43.5	96	20
600613320	1" 1/4	32	38 S	M52 × 2	55	26	49	109	22

O-RING METRIC FEMALE 24°
CONE H.T. - DIN 3865 SERIES S DIN 2353
公制内螺纹 24° 外锥面带 O 型圈密封重系列 45° 直接头 DIN 3865

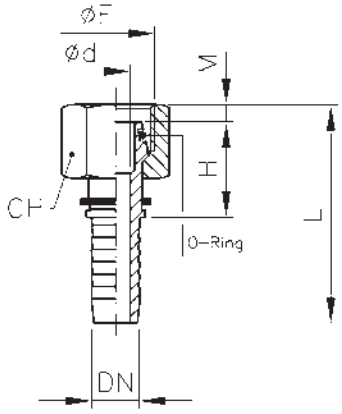

订货型号	Ø 管外径		Ø DIN	Ø F	CH	Ø d	H	L	M
	英寸	mm							
600650804	1/4	6	8 S	M16 × 1.5	19	4	24.2	53.5	2
600651004	1/4	6	10 S	M18 × 1.5	22	4	24.5	52.8	1
600651205	5/16	8	12 S	M20 × 1.5	24	5.5	30	59.5	1
600651206	3/8	10	12 S	M20 × 1.5	24	7	30	59.5	1
600651406	3/8	10	14 S	M22 × 1.5	27	7	30.5	60.5	1.5
600651408	1/2	13	14 S	M22 × 1.5	27	9.5	30.5	62	1.5
600651608	1/2	13	16 S	M24 × 1.5	30	10	31.5	63.5	2
600652010	5/8	16	20 S	M30 × 2	36	12.5	36.5	70.5	1
600652012	3/4	19	20 S	M30 × 2	36	15	36.5	76.5	1
600652512	3/4	19	25 S	M36 × 2	46	15.5	37	81	5
600652516	1"	25	25 S	M36 × 2	46	19	37	92.5	3
600653016	1"	25	30 S	M42 × 2	50	20	41.5	100.5	6.5
600653820	1" 1/4	32	38 S	M52 × 2	60	26	46	114.5	8.5

90° O-RING METRIC FEMALE SWEPT ELBOW 24°
CONE H.T. - DIN 3865 SERIES S DIN 2353
公制内螺纹 24° 外锥面带 O 型圈密封重系列 90° 弯接头 DIN 3865

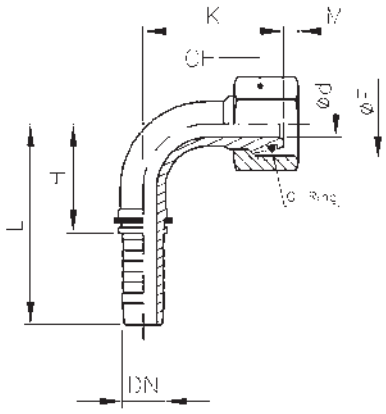

订货型号	Ø 管外径		Ø DIN	Ø F	CH	Ø d	H ≈	L ≈	K ≈	M
	英寸	mm								
600660804	1/4	6	8 S	M16 × 1.5	19	4	24	51.5	32	2
600661004	1/4	6	10 S	M18 × 1.5	22	4	24	51.5	33	1
600661205	5/16	8	12 S	M20 × 1.5	24	5.5	27	55.5	35	1
600661206	3/8	10	12 S	M20 × 1.5	24	7	31.5	60	39.5	1
600661406	3/8	10	14 S	M22 × 1.5	27	7	31	59.5	42.5	1.5
600661408	1/2	13	14 S	M22 × 1.5	27	9.5	39	69	47	1.5
600661608	1/2	13	16 S	M24 × 1.5	30	10	39	69	47	2
600662010	5/8	16	20 S	M30 × 2	36	12.5	45.5	78.5	57.5	1
600662012	3/4	19	20 S	M30 × 2	36	15	55	94	62	1
600662512	3/4	19	25 S	M36 × 2	46	15.5	55	94	62	5
600662516	1"	25	25 S	M36 × 2	46	19	75.5	128	73	3
600663016	1"	25	30 S	M42 × 2	50	20	75.5	128	73	6.5
600663820	1" 1/4	32	38 S	M52 × 2	60	26	81	141	83.5	8.5

45° O-RING METRIC FEMALE SWEPT ELBOW
24° CONE H.T. - DIN 3865 SERIES S DIN 2353
公制内螺纹 24° 外锥面带 O 型圈密封重系列 45° 弯接头 DIN 3865

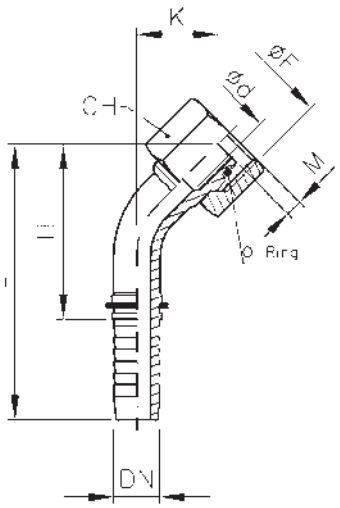

订货型号	Ø 管外径		Ø DIN	Ø F	CH	Ø d	H ≈	L ≈	K ≈	M
	英寸	mm								
600670804	1/4	6	8 S	M16 × 1.5	19	4	41	68.5	17.5	2
600671004	1/4	6	10 S	M18 × 1.5	22	4	41.5	69	18	1
600671205	5/16	8	12 S	M20 × 1.5	24	5.5	47	75.5	19	1
600671206	3/8	10	12 S	M20 × 1.5	24	7	53	81.5	20.5	1
600671406	3/8	10	14 S	M22 × 1.5	27	7	54.5	83	22.5	1.5
600671408	1/2	13	14 S	M22 × 1.5	27	9.5	65	95	24	1.5
600671608	1/2	13	16 S	M24 × 1.5	30	10	65	95	24	2
600672010	5/8	16	20 S	M30 × 2	36	12.5	77.5	110.5	29.5	1
600672012	3/4	19	20 S	M30 × 2	36	15	68	107	31	1
600672512	3/4	19	25 S	M36 × 2	46	15.5	68	107	31	5
600672516	1"	25	25 S	M36 × 2	46	19	88	140.5	35	3
600673016	1"	25	30 S	M42 × 2	50	20	88	140.5	35	6.5
600673820	1" 1/4	32	38 S	M52 × 2	60	26	97	157	38.5	8.5

STRAIGHT METRIC STAND PIPE L.T.
DIN 2353
公制卡套式直管轻系列直接头 DIN 2353

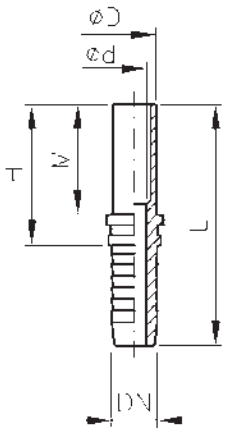

订货型号	Ø 管外径		Ø DIN	Ø D	Ø d	H	L	M	
	英寸	mm							
600460604	1/4	6	6 L	6	4	28.7	56	22	
600460804	1/4	6	8 L	8	4	28.7	56	22	
600461005	5/16	8	10 L	10	5.5	31	59.5	23	
600461006	3/8	10	10 L	10	7	31	59.5	23	
600461206	3/8	10	12 L	12	7	31	59.5	23	
600461508	1/2	13	15 L	15	10	34	64	25	
600461810	5/8	16	18 L	18	12.5	35	68	26	
600462212	3/4	19	22 L	22	15.5	38.5	77.5	28	
600462816	1"	25	28 L	28	20	41	93.5	30	
600463520	1" 1/4	32	35 L	35	26	47.5	107.5	36	
600464224	1" 1/2	38	42 L	42	32	51.5	121.5	40	

90° METRIC STAND PIPE L.T.
DIN 2353
公制卡套式直管轻系列 90° 弯接头 DIN 2353

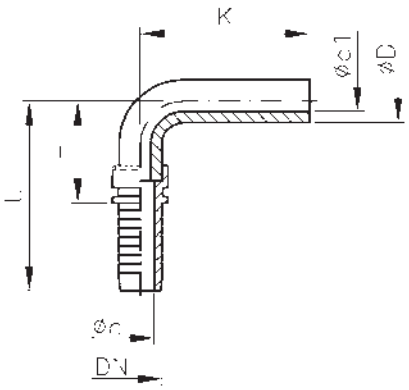

订货型号	Ø 管外径		Ø DIN	Ø D	Ø d1	H ≈	L ≈	K ≈	Ø d
	英寸	mm							
600470604	1/4	6	6 L	6	4	26	53.3	36	4
600470804	1/4	6	8 L	8	5	28	55.3	39	4
600471005	5/16	8	10 L	10	7	31.5	60	42	5.5
600471006	3/8	10	10 L	10	7	31.5	60	42	7
600471206	3/8	10	12 L	12	8	35	63.5	45	7
600471508	1/2	13	15 L	15	11	39	69	52.5	10
600471810	5/8	16	18 L	18	15	45	78	58	12.5
600472212	3/4	19	22 L	22	17	49	88	65	15.5
600473520	1" 1/4	32	35 L	35	29	74	134	95	26
600474224	1" 1/2	38	42 L	42	36	93	163	118	32

45° METRIC STAND PIPE L.T. DIN 2353
公制卡套式直管轻系列 45° 弯接头 DIN 2353

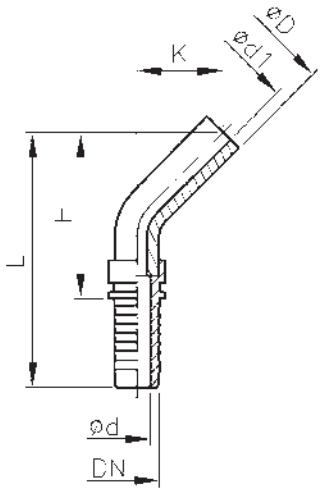

订货型号	Ø 管外径		Ø DIN	Ø D	Ø d1	H ≈	L ≈	K ≈	Ø d
	英寸	mm							
600480804	1/4	6	8 L	8	5	44	71.3	22	4
600481206	3/8	10	12 L	12	8	49	77.5	23.5	7
600481508	1/2	13	15 L	15	11	54.5	84.5	27.5	10
600481810	5/8	16	18 L	18	15	61	94	28.5	12.5
600482212	3/4	19	22 L	22	17	67	106	32.5	15.5
600483520	1" 1/4	32	35 L	35	29	96	156	46	26
600484224	1" 1/2	38	42 L	42	36	113.5	183.5	54	32

STRAIGHT METRIC STAND PIPE H.T. DIN 2353
公制卡套式直管重系列直接头 DIN 2353

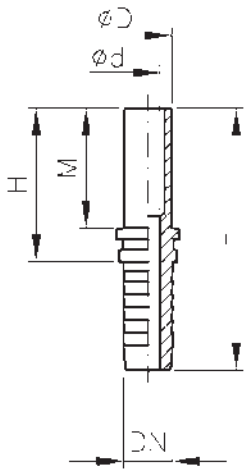

订货型号	Ø 管外径		Ø DIN	Ø D	Ø d	H	L	M	
	英寸	mm							
600460804	1/4	6	8 S	8	4	28.7	56	22	
600461004	1/4	6	10 S	10	4	32.7	60	26	
600461205	5/16	8	12 S	12	5.5	34	62.5	26	
600461406	3/8	10	14 S	14	7	37	65.5	29	
600461408	1/2	13	14 S	14	10	38	68	29	
600461608	1/2	13	16 S	16	10	39	69	30	
600462010	5/8	16	20 S	20	12.5	45	78	36	
600462012	3/4	19	20 S	20	15.5	46.5	85.5	36	
600462512	3/4	19	25 S	25	15.5	50.5	89.5	40	
600462516	1"	25	25 S	25	20	51	103.5	40	
600463016	1"	25	30 S	30	20	55	107.5	44	
600463820	1" 1/4	32	38 S	38	26	61.5	121.5	50	

90° METRIC STAND PIPE L.T. DIN 2353
公制卡套式直管重系列 90° 弯接头 DIN 2353

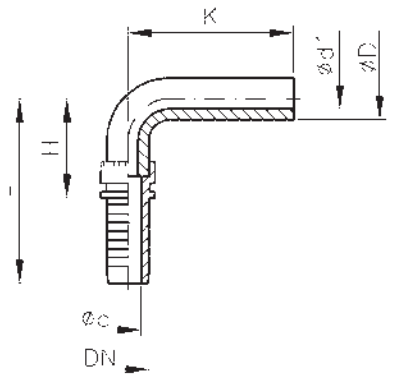

订货型号	Ø 管外径		Ø DIN	Ø D	Ø d1	H ≈	L ≈	K ≈	Ø d
	英寸	mm							
600470804	1/4	6	8 S	8	5	28	55.3	39	4
600471004	1/4	6	10 S	10	7	31	58.3	42	4
600471205	5/16	8	12 S	12	8	35	63.5	45	5.5
600471406	3/8	10	14 S	14	10	38	66.5	52	7
600471408	1/2	13	14 S	14	10	39	69	52	10
600471608	1/2	13	16 S	16	12	42	72	55	10
600472010	5/8	16	20 S	20	15	48	81	65	12.5
600472012	3/4	19	20 S	20	15	49	88	65	15.5
600472512	3/4	19	25 S	25	20	57.5	96.5	75.5	15.5
600472516	1"	25	25 S	25	20	58	110.5	75.5	20
600473016	1"	25	30 S	30	24	67	119.5	87	20
600473820	1" 1/4	32	38 S	38	30	83	143	105	26

45° METRIC STAND PIPE H.T. DIN 2353
公制卡套式直管重系列 45° 弯接头 DIN 2353

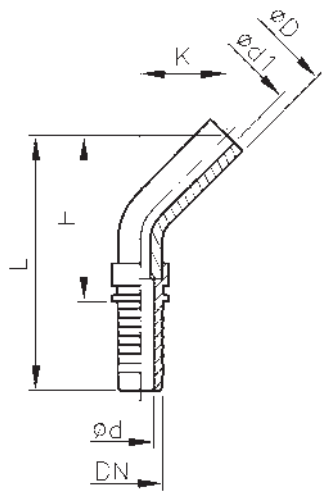

订货型号	Ø 管外径		Ø DIN	Ø D	Ø d1	H ≈	L ≈	K ≈	Ø d
	英寸	mm							
600480804	1/4	6	8 S	8	5	44	71.3	22	4
600481004	1/4	6	10 S	10	7	45.5	72.8	23	4
600481205	5/16	8	12 S	12	8	49	77.5	23.5	5.5
600481406	3/8	10	14 S	14	10	54	82.5	27	7
600481608	1/2	13	16 S	16	12	59	89	27.5	10
600482010	5/8	16	20 S	20	15	66	99	32	12.5
600482012	3/4	19	20 S	20	15	66	105	32	15.5
600482512	3/4	19	25 S	25	20	75.5	114.5	36	15.5
600482516	1"	25	25 S	25	20	76	128.5	36	20
600483016	1"	25	30 S	30	24	87.5	140	40.5	20
600483820	1" 1/4	32	38 S	38	30	104	164	47.5	26

FRENCH METRIC
MALE 24° CONE SEAT GAZ TYPE
法国标准公制外螺纹 24° 内锥面直接头

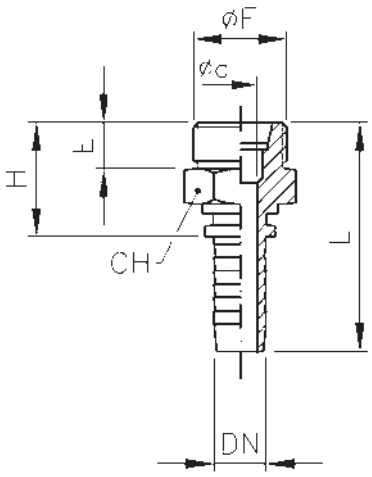

订货型号	Ø 管外径		Ø F	CH	Ø d	H	L	E
	英寸	mm						
600901305	5/16	8	M20 × 1.5	22	5.5	24.5	53	12
600901306	3/8	10	M20 × 1.5	22	7	24.5	53	12
600901706	3/8	10	M24 × 1.5	24	7	25.5	54	12
600901708	1/2	13	M24 × 1.5	24	10	26	56	12
600902110	5/8	16	M30 × 1.5	30	12.5	28.5	61.5	14
600902712	3/4	19	M36 × 1.5	36	15.5	31	70	14
600903416	1"	25	M45 × 1.5	46	20	36	88.5	16

FRENCH METRIC
FEMALE GAZ TYPE
法国标准内螺丝 24° 外锥面直接头

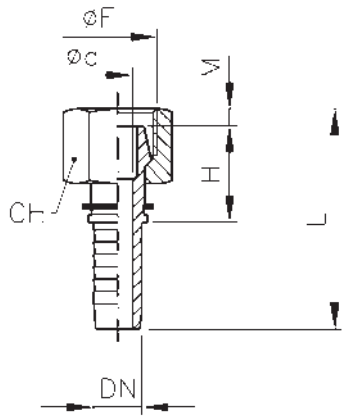

订货型号	Ø 管外径		Ø F	CH	Ø d	H	L	E
	英寸	mm						
600911304	1/4	6	M20 × 1.5	24	4	29.7	58	1
600911305	5/16	8	M20 × 1.5	24	5.5	30.5	60	1
600911306	3/8	10	M20 × 1.5	24	7	30.5	60	1
600911706	3/8	10	M24 × 1.5	30	7	30.5	60	1
600911708	1/2	13	M24 × 1.5	30	10	31	61	1
600912108	1/2	13	M30 × 1.5	36	10	35.5	67.5	2
600912110	5/8	16	M30 × 1.5	36	12.5	36	71	2
600912712	3/4	19	M36 × 1.5	42	15.5	39.5	80.5	2
600913416	1"	25	M45 × 1.5	55	20	39.5	92	-

90° FRENCH METRIC
FEMALE GAZ TYPE
法国标准内螺丝 24° 外锥 90° 弯接头

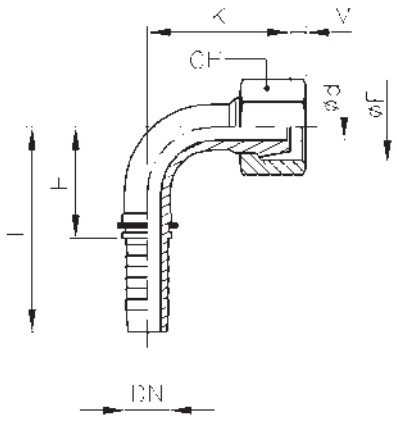

订货型号	Ø 管外径		Ø F	CH	Ø d	H ≈	L ≈	K ≈	E
	英寸	mm							
600921305	5/16	8	M20 × 1.5	24	5.5	26.5	55	36.5	1
600921306	3/8	10	M20 × 1.5	24	7	31	59.5	41	1
600921708	1/2	13	M24 × 1.5	30	10	38.5	68.5	45	1
600922110	5/8	16	M30 × 1.5	36	12.5	45	78	55.5	2
600922712	3/4	19	M36 × 1.5	42	15.5	54.5	93.5	60.5	2

FRENCH METRIC
STRAIGHT STAND PIPE GAZ TYPE
法国标准直管直接头

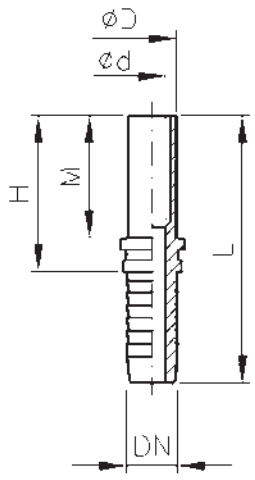

订货型号	Ø 管外径		Ø D	Ø d	H	L	M	
	英寸	mm						
600521304	1/4	6	13.25	4	28.7	56	22	
600521305	5/16	8	13.25	5.5	29.5	58	22	
600521306	3/8	10	13.25	7	29.5	58	22	
600521706	3/8	10	16.75	7	31.5	60	24	
600521708	1/2	13	16.75	10	32.5	62.5	24	
600522108	1/2	13	21.25	10	34.5	64.5	26	
600522110	5/8	16	21.25	12.5	34.5	67.5	26	
600522712	3/4	19	26.75	15.5	36	75.5	26	
600523416	1"	25	33.50	20	38	90	27	

BSP BANJO
英制铰接体

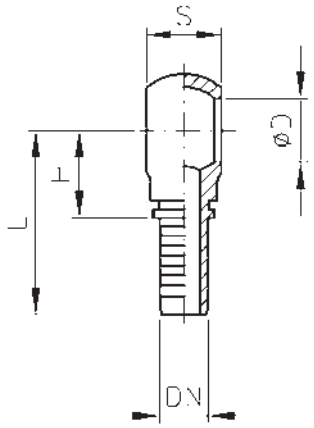

订货型号	Ø 管外径		Ø D	H	L	S			
	英寸	mm							
600190404	1/4	6	1/4	23	50	14			
600190604	1/4	6	3/8	23	50	17			
600190605	5/16	8	3/8	26.5	55	17			
600190606	3/8	10	3/8	26.5	55	17			
600190806	3/8	10	1/2	28.5	57	22			
600190808	1/2	13	1/2	29	59	22			
600191210	5/8	16	3/4	34.5	67.5	30			
600191212	3/4	19	3/4	35.5	74.5	30			
600191616	1”	25	1”	41.5	94	36			

METRIC BANJO
公制铰接体

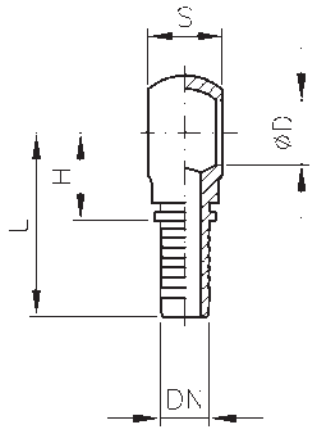

订货型号	Ø 管外径		Ø D	H	L	S		
	英寸	mm						
600291204	1/4	6	M12 × 1.5	21	48	12		
600291404	1/4	6	M14 × 1.5	23	50	14		
600291405	5/16	8	M14 × 1.5	23.5	52	14		
600291605	5/16	8	M16 × 1.5	26.5	55	16		
600291606	3/8	10	M16 × 1.5	26.5	55	16		
600291806	3/8	10	M18 × 1.5	28.5	57	20		
600291808	1/2	13	M18 × 1.5	29	59	20		
600292008	1/2	13	M20 × 1.5	29	59	22		
600292208	1/2	13	M22 × 1.5	29	59	22		

60° BANJO MALE THREAD BSP - METRIC 英制外螺纹铰接体

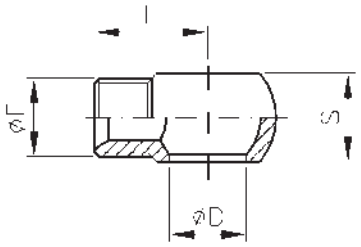

订货型号	Ø D	ØF GAS	ØF METRICO	S	L		
*600000507	18	3/8	-	20	29		
600000513	1/4	1/4	-	14	24		
600000514	3/8	3/8	-	17	26		
*600000517	1/2	-	18 × 1.5	22	30		
600000518	1/2	1/2	-	22	32		
*600000522	3/4	3/4	-	30	39		

* 库存随订单在变化，交期另行通知

WELDING BANJO BSP 焊接英制铰接体

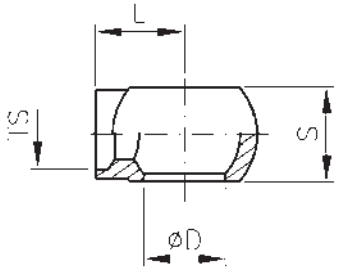

订货型号	Ø D	Ø 管外径 TS	S	L				
600000207	1/4	10	14	25				
600000211	3/8	12	16	27				
*600000212	3/8	14	17	27				
600000214	1/2	15	22	32				
*600000219	3/4	20	30	40				
*600000220	3/4	22	30	40				

* 库存随订单在变化，交期另行通知

WELDING BANJO METRIC 焊接公制铰接体

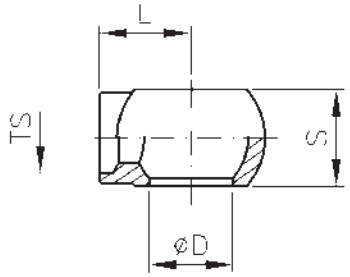

订货型号	Ø D	Ø 管外径 TS	S	L				
*600000101	8	4	8	16				
600000107	10	8	12	22				
600000109	12	8	12	22				
600000113	14	10	14	25				
600000117	16	14	17	27				
*600000119	18	14	20	29				
600000120	18	15	20	29				

* 库存随订单在变化，交期另行通知

METRIC BOLT FOR BANJO
公制铰接螺栓

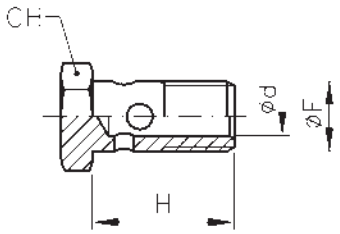

订货型号	Ø F	Ø d	H	CH					
600001204	M12 × 1.5	6	24	17					
600001205	M14 × 1.5	8	27	19					
600001206	M16 × 1.5	9	31	22					
600001207	M18 × 1.5	10	36	24					
600001208	M20 × 1.5	13	39	27					
600001209	M22 × 1.5	13	39	27					

BSP BOLT FOR BANJO
英制铰接螺栓

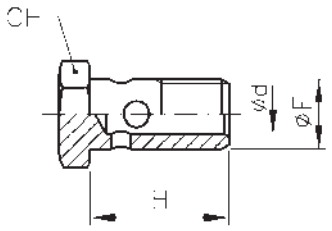

订货型号	Ø F	Ø d	H	CH					
600001302	1/4	7	27	19					
600001303	3/8	9	31	22					
600001304	1/2	12	38.5	27					
*600001305	5/8	13	42	30					
600001306	3/4	17.5	47.5	32					
600001307	1”	22	58	40					

CRIMP FITTINGS FOR EN 856 - 4SH - SAE 100 R13-R15 SKIVING INSIDE/OUTSIDE

适用 EN 856 - 4SH - SAE 100 R13-R15 内外剥胶管接头

DOUBLE SKIVE FERRULE FOR EN 856 - 4SH HOSE
四层剥内外胶套筒

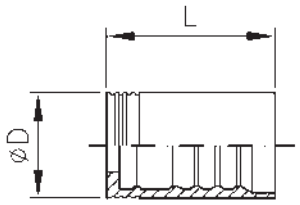

订货型号	Ø 管外径		Ø D	L					
	英寸	mm							
600491612	3/4	19	38	60					
600491616	1"	25	46	74.5					
600491620	1" 1/4	32	55	88					
600491624	1" 1/2	38	62	94					
600491632	2"	50	79.5	99					

CRIMP FERRULE FOR SAE 100 R13-R15 HOSE
六层剥内外胶套筒

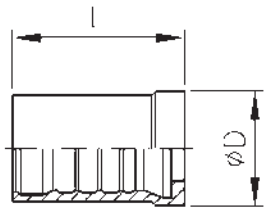

订货型号	Ø 管外径		Ø D	L					
	英寸	mm							
600491720	1" 1/4	32	60	88					
600491724	1" 1/2	38	67	94					
600491732	2"	50	84.5	99					

BSP MALE
PARALLEL 60° CONE SEAT
英制外螺纹 60° 内锥面密封穿钢丝直接头

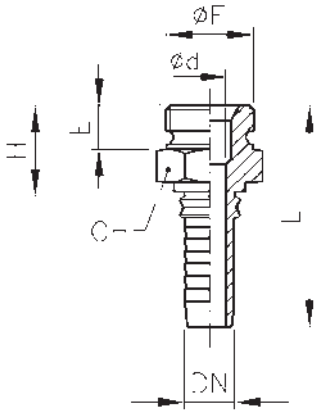

订货型号	Ø 管外径		Ø F	CH	L	H	Ø d	E
	英寸	mm						
600681212	3/4	19	3/4	32	93.5	31.5	14	16
600681616	1"	25	1"	41	110.5	37.5	19	19
600682020	1" 1/4	32	1" 1/4	50	131	42.7	25	20
600682424	1" 1/2	38	1" 1/2	55	138.5	45	31	22
600683232	2"	50	2"	70	149	51	42	25

BSP O-RING FEMALE 60° CONE
THRUST-WIRE NUT
英制内螺纹 60° 锥面带 O 型圈密封穿钢丝直接头

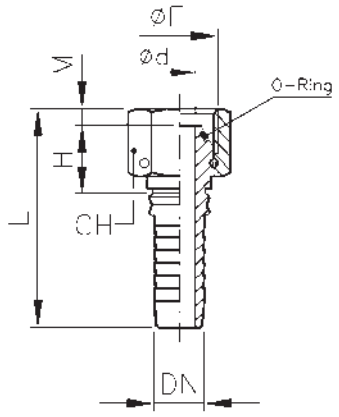

订货型号	Ø 管外径		Ø F	CH	Ø d	H	L	M
	英寸	mm						
600741212 (2)	3/4	19	3/4	32	14	22	91.5	8.7
600741616 (2)	1"	25	1"	38	19	25.5	108.5	10.5
600742020	1" 1/4	32	1" 1/4	50	25	33	131.4	10.1
600742424	1" 1/2	38	1" 1/2	55	31	33	138.7	12.2
600743232	2"	50	2"	70	42	31	145.1	16.1

90° BSP O-RING FEMALE ELBOW 60° CONE THRUST-WIRE NUT
英制内螺纹 60° 锥面带 O 型圈密封穿钢丝 90° 弯接头

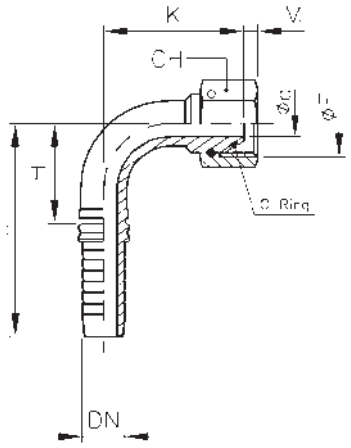

订货型号	Ø 管外径		Ø F	CH	Ø d	H ≈	L ≈	K ≈	M
	英寸	mm							
600751212 (2)	3/4	19	3/4	32	14	50	112	58.5	8.7
600751616 (2)	1"	25	1"	38	19	72	145	71	10.5
600752020	1"1/4	32	1"1/4	50	25	77.2	165.5	89	10.1
600752424	1"1/2	38	1"1/2	55	31	90.5	184	104	12.2
600753232	2"	50	2"	70	42	128	226	124.5	16.1

45° BSP O-RING FEMALE ELBOW 60° CONE THRUST-WIRE NUT
英制内螺纹 60° 锥面带 O 型圈密封穿钢丝 45° 弯接头

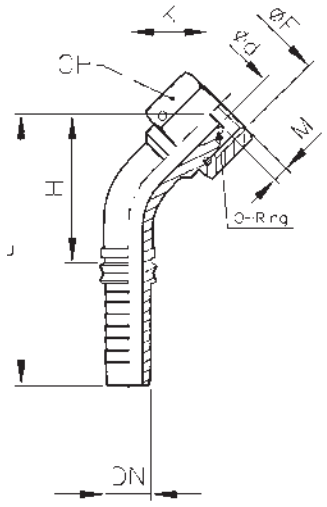

订货型号	Ø 管外径		Ø F	CH	Ø d	H ≈	L ≈	K ≈	M
	英寸	mm							
600761212 (2)	3/4	19	3/4	32	14	59	121	28	8.7
600761616 (2)	1"	25	1"	38	19	81.5	154.5	33	10.5
600762020	1"1/4	32	1"1/4	50	25	95.2	183.5	42	10.1
600762424	1"1/2	38	1"1/2	55	31	110	203.5	48	12.2
600763232	2"	50	2"	70	42	129	227	51.5	18.1

NPTF MALE
60° CONE SEAT SAE J 516
美制 NPTF 外螺纹 60° 内锥密封直接头

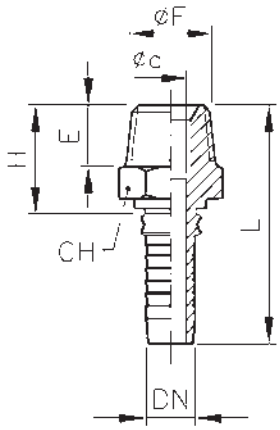

订货型号	Ø 管外径		Ø F	CH	L	H	Ø d	E
	英寸	mm						
600691212	3/4	19	3/4	27	96	34	14	19
600691616	1"	25	1"	36	114.5	41.5	19	23.9
600692020	1"1/4	32	1"1/4	46	132.5	44.5	25	24.6
600692424	1"1/2	38	1"1/2	50	141.5	48	31	25.4

JIC FEMALE 74° CONE SEAT - SAE J 514
THRUST-WIRE NUT
美制 UNF 内螺纹 74° 外锥面密封穿钢丝直接头

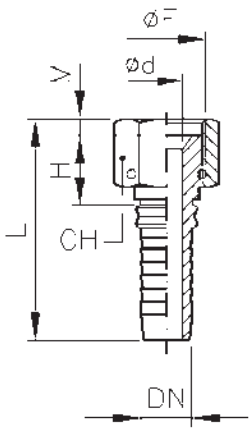

订货型号	Ø 管外径		Ø F	CH	Ø d	H	L	M
	英寸	mm						
600771712 (2)	3/4	19	1"1/16	32	14	20	82	14.5
600772116 (2)	1"	25	1"5/16	38	19	22.5	95.5	14.5
600772620	1"1/4	32	1"5/8	50	25	26	114.5	16.5
600773024	1"1/2	38	1"7/8	55	31	27	120.5	18

90° JIC FEMALE SWEPT ELBOW
74° CONE SEAT SAE J514 THRUST-WIRE NUT
美制 UNF 内螺纹 74° 外锥面密封穿钢丝 90° 弯接头

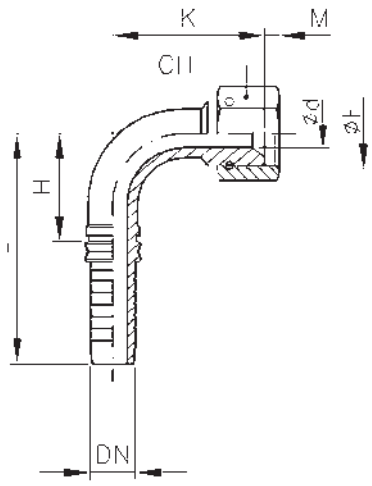

订货型号	Ø 管外径		Ø F	CH	Ø d	H ≈	L ≈	K ≈	M
	英寸	mm							
600781712 (2)	3/4	19	1"1/16	32	14	50	112	56	14.5
600782116 (2)	1"	25	1"5/16	38	19	72	145	69	14.5
600782620	1"1/4	32	1"5/8	50	25	77.2	165.5	84.5	16.5
600783024	1"1/2	38	1"7/8	55	31	101.5	195	98	18

45° JIC FEMALE SWEPT ELBOW
74° CONE SEAT SAE J514 THRUST-WIRE NUT
美制 UNF 内螺纹 74° 外锥面密封穿钢丝 45° 弯接头

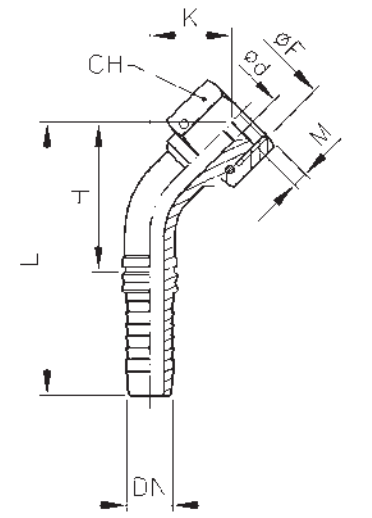

订货型号	Ø 管外径		Ø F	CH	Ø d	H ≈	L ≈	K ≈	M
	英寸	mm							
600791712 (2)	3/4	19	1"1/16	32	14	60	122	27	14.5
600792116 (2)	1"	25	1"5/16	38	19	81.5	154.5	32	14.5
600792620	1"1/4	32	1"5/8	50	25	94	182.5	39.5	16.5
600793024	1"1/2	38	1"7/8	55	31	108	201.5	44.5	18

ORFS FEMALE SAE J1453
CRIMPED BACKNUT
美制 ORFS 内螺纹直接头

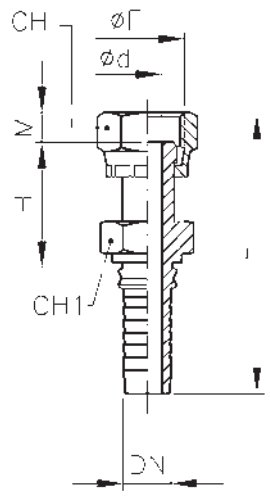

订货型号	Ø 管外径		Ø F	CH1	M	H	Ø d	L	CH
	英寸	mm							
600861212	3/4	19	1"3/16	30	14.5	40	14	102	36
600861616	1"	25	1"7/16	36	15	44.5	19	117.5	41
600862020	1"1/4	32	1"11/16	41	15	46.7	25	135	50

90° ORFS FEMALE SAE J1453
(SLIP-ON NUT)
美制 ORFS 内螺纹 90° 弯接头

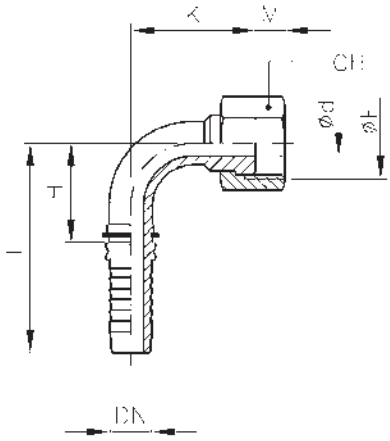

订货型号	Ø 管外径		Ø F	CH	M	H ≈	Ø d	K ≈	L ≈
	英寸	mm							
600871212	3/4	19	1"3/16	36	14.5	53	14	48	115
600871616	1"	25	1"7/16	41	15	69.5	19	58.5	142.5
600872020	1"1/4	32	1"11/16	50	15	80.7	25	67.5	169

SAE J518
STRAIGHT - FLANGE 3000 PSI
SAE J518 轻系列 3000 PSI 矿用直法兰

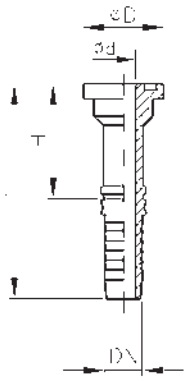

订货型号	Ø 管外径		Ø FLANGIA	Ø D	Ø d	H	L	
	英寸	mm						
600803812	3/4	19	3/4	38.1	14	54.5	116.5	
600804412	3/4	19	1"	44.5	14	54.5	116.5	
600804416	1"	25	1"	44.5	19	62.5	135.5	
600805116	1"	25	1"1/4	50.8	19	68.5	141.5	
600805120	1"1/4	32	1"1/4	50.8	25	68.2	156.5	
600806020	1"1/4	32	1"1/2	60.3	25	70.2	158.5	
600806024	1"1/2	38	1"1/2	60.3	31	73.5	167	
600807124	1"1/2	38	2"	71.4	31	73.5	167	
600807132	2"	50	2"	71.4	42	78.5	176.5	

90° SAE J518
FLANGE 3000 PSI
SAE J518 轻系列 3000 PSI 矿用 90° 弯法兰

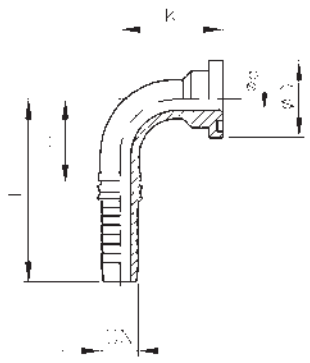

订货型号	Ø 管外径		Ø FLANGIA	Ø D	Ø d	H ≈	L ≈	K ≈
	英寸	mm						
600813812	3/4	19	3/4	38.1	14	61	123	52
600814412	3/4	19	1"	44.5	14	61	123	52
600814416	1"	25	1"	44.5	19	75.5	148.5	62
600815116	1"	25	1"1/4	50.8	19	75.5	148.5	63.5
600815120	1"1/4	32	1"1/4	50.8	25	91.2	179.5	75
600816020	1"1/4	32	1"1/2	60.3	25	91.2	179.5	77
600816024	1"1/2	38	1"1/2	60.3	31	109	202.5	89
600817124	1"1/2	38	2"	71.4	31	109	202.5	89
600817132	2"	50	2"	71.4	42	128.5	226.5	112

45° SAE J518
FLANGE 3000 PSI
SAE J518 轻系列 3000 PSI 矿用 45° 弯法兰

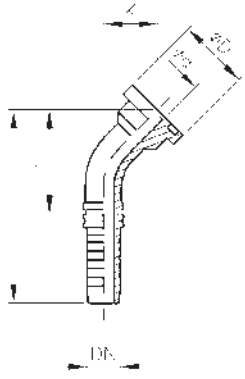

订货型号	Ø 管外径		Ø FLANGIA	Ø D	Ø d	H ≈	L ≈	K ≈
	英寸	mm						
600823812	3/4	19	3/4	38.1	14	65	127	24
600824412	3/4	19	1"	44.5	14	65	127	25.5
600824416	1"	25	1"	44.5	19	80	153	27.5
600825116	1"	25	1"1/4	50.8	19	80	153	28.5
600825120	1"1/4	32	1"1/4	50.8	25	93.2	181.5	32
600826020	1"1/4	32	1"1/2	60.3	25	94.7	183	33.5
600826024	1"1/2	38	1"1/2	60.3	31	109	202.5	37
600827124	1"1/2	38	2"	71.4	31	109	202.5	38
600827132	2"	50	2"	71.4	42	123.5	221.5	41.5

SAE J518
STRAIGHT - FLANGE 6000 PSI
SAE J518 重系列 6000PSI 矿用直法兰

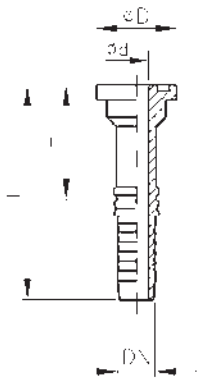

订货型号	Ø 管外径		Ø FLANGIA	Ø D	Ø d	H	L	
	英寸	mm						
600834112	3/4	19	3/4	41.3	14	65.5	127.5	
600834712	3/4	19	1"	47.6	14	77.5	139.5	
600834716	1"	25	1"	47.6	19	80	153	
600835416	1"	25	1"1/4	54	19	87	160	
600835420	1"1/4	32	1"1/4	54	25	88.2	170.5	
600836320	1"1/4	32	1"1/2	63.5	25	88.2	176.5	
600836324	1"1/2	38	1"1/2	63.5	31	90.5	184	
600838032	2"	50	2"	79.4	42	106.5	204.5	

90° SAE J518
FLANGE 6000 PSI
SAE J518 重系列 6000PSI 矿用 90° 弯法兰

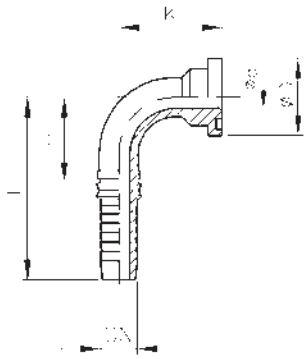

订货型号	Ø 管外径		Ø FLANGIA	Ø D	Ø d	H ≈	L ≈	K ≈
	英寸	mm						
600844112	3/4	19	3/4	41.3	14	60.5	122.5	61
600844712	3/4	19	1"	47.6	14	61	123	67
600844716	1"	25	1"	47.6	19	72.5	145.5	73
600845416	1"	25	1"1/4	54	19	72.5	145.5	80
600845420	1"1/4	32	1" 1/4	54	25	86.2	174.5	91
600846320	1"1/4	32	1"1/2	63.5	25	86.2	174.5	99.5
600846324	1"1/2	38	1"1/2	63.5	31	106	199.5	107.5
600848032	2"	50	2"	79.4	42	133.5	231.5	132

45° SAE J518
FLANGE 6000 PSI
SAE J518 重系列 6000PSI 矿用 45° 弯法兰

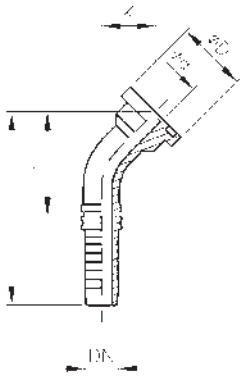

订货型号	Ø 管外径		Ø FLANGIA	Ø D	Ø d	H ≈	L ≈	K ≈
	英寸	mm						
600854112	3.4	19	3/4	41.3	14	70.5	132.5	29.5
600854712	3.4	19	1"	47.6	14	70.5	137.5	33.5
600854716	1"	25	1"	47.6	19	82	155	34
600855416	1"	25	1"1/4	54	19	87	160	39
600855420	1"1/4	32	1"1/4	54	25	96.2	184.5	40
600856320	1"1/4	32	1"1/2	63.5	25	105.7	194	49
600856324	1"1/2	38	1"1/2	63.5	31	119	212.5	50
600858032	2"	50	2"	79.4	42	147	245	60.5

METRIC MALE 24° CONE
SEAT H.T. - DIN 3853/3861 SERIES S DIN 2353
公制外螺纹 24° 内锥密封重型直接头 DIN 3853/3861

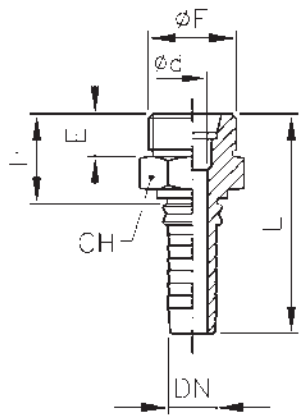

订货型号	Ø 管外径		Ø DIN	Ø F	CH	Ø d	H	L	E
	英寸	mm							
600702512	3/4	19	25 S	M36 × 2	41	14	36.5	98.5	18
600703016	1"	25	30 S	M42 × 2	46	19	41	114	20
600703820	1" 1/4	32	38 S	M52 × 2	55	25	46.7	135	22

O-RING METRIC FEMALE
24° CONE HT - DIN 3865 SERIES S DIN 2353
公制内螺纹 24° 外锥面带 O 型圈密封重型直接头

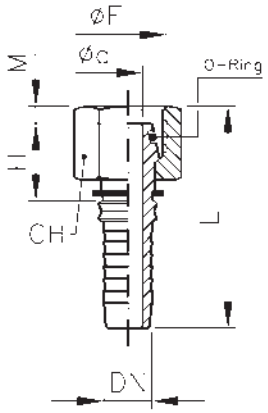

订货型号	Ø 管外径		Ø DIN	Ø F	CH	Ø d	H	L	M
	英寸	mm							
600712512	3/4	19	25 S	M36 × 2	46	14	33.5	95.5	5
600713016	1"	25	30 S	M42 × 2	50	19	39.5	112.5	6.5
600713820	1" 1/4	32	38 S	M52 × 2	60	25	43.7	132	8.5

90° O-RING METRIC FEMALE ELBOW 24° CONE H.T.
DIN 3865 SERIES S DIN 2353
公制内螺纹 24° 外锥面带 O 型圈密封 90° 弯直接头

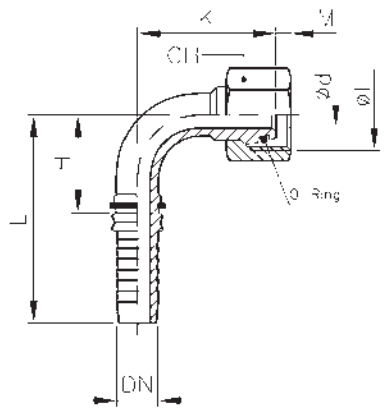

订货型号	Ø 管外径		Ø DIN	Ø F	CH	Ø d	H ≈	L ≈	K ≈	M
	英寸	mm								
600722512	3/4	19	25 S	M36 × 2	46	14	51.5	113.5	62	5
600723016	1"	25	30 S	M42 × 2	50	19	73.5	146.5	73	6.5
600723820	1" 1/4	32	38 S	M52 × 2	60	25	78.7	167	83.5	8.5

45° O.RING METRIC FEMALE ELBOW 24°
CONE H.T. - DIN 3865 SERIES S DIN 2353
公制内螺纹 24° 外锥面带 O 型圈密封 45° 弯直接头

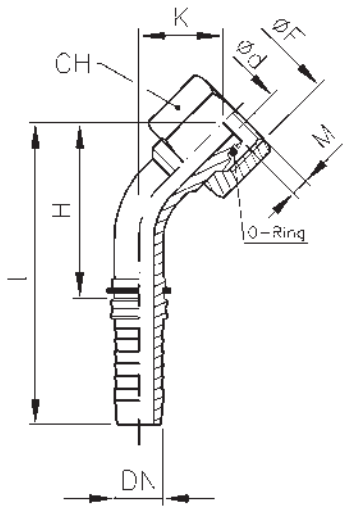

订货型号	Ø 管外径		Ø DIN	Ø F	CH	Ø d	H ≈	L ≈	K ≈	M
	英寸	mm								
600732512	3/4	19	25 S	M36 × 2	46	14	64.5	126.5	31	5
600733016	1"	25	30 S	M42 × 2	50	19	86	159	35	6.5
600733820	1" 1/4	32	38 S	M52 × 2	60	25	94.7	183	38.5	8.5

ASSEMBLY MACHINES 扣压机

Manual Swaging
手动扣压机

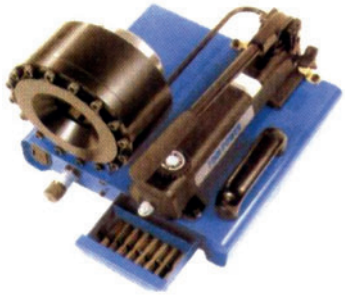

TN366-P 16 HP

Standard die sets 机器型号			Technical specification 技术资料	
Part nr. 代号	Swaging diameter 扣压范围	L. mm. 长度	Hose size 最大扣压尺寸	1"
			Max opening (mm.) 模具扩张度	+20
			Master die shoe lenght (mm.) 主要模具长度	64
			Controls 控制器	manual
			Hydraulic pump manual 液压泵	3.6 cm³
TN 367 - 16 - 10	10.0-12.0	55	Swaging force 散大操作力	720
TN 367 - 16 - 12	12.0-14.0	55		
TN 367 - 16 - 14	14.0-16.0	55	Overall Dimension 尺寸	
TN 367 - 16 - 16	16.0-19.0	55		
TN 367 - 16 - 19	19.0-23.0	55	Length 长	340
TN 367 - 16 - 23	23.0-27.0	55	Width 宽	320
TN 367 - 16 - 27	27.0-31.0	65	Height 高	250
TN 367 - 16 - 39	31.0-36.0	65	Weight(Kg.) 重量	22

This machine is also available with the capacity 1"1/4. 4 spirals (Model TN 366 – P 20 HP).

机型 255TN366-P 20HP，最大扣压尺寸可以达到 1 1/4"，四层胶管。

Electric Swaging
电动扣压机

TN366-P 32 MS

TN366-P 32 IS

TN366-P 32 VS

Moldes Standard 机器型号			Technical specification 技术参数	
Part nr. 代号	Swaging diameter 扣压范围	L. mm.	Hose size 胶管尺寸	2"
			Max opening (mm.) 最大扩张度	+33
			Master die shoe lenght (mm.) 主要模具长度	80
			Motor (Kw) 马达	3
TN 367 - 32 - 10	10.0-12.0	55	Voltage 电压	230/400
TN 367 - 32 - 12	12.0-14.0	55	Swaging force (KN) 扣压力	2000
TN 367 - 32 - 14	14.0-16.0	55		
TN 367 - 32 - 16	16.0-19.0	55	Overall Dimension (mm.) 尺寸	
TN 367 - 32 - 19	19.0-22.0	55		
TN 367 - 32 - 22	22.0-26.0	70	Length 长度	600
TN 367 - 32 - 26	26.0-30.0	70	Width 宽度	540
TN 367 - 32 - 30	30.0-34.0	70	Height 高度	630
TN 367 - 32 - 34	34.0-39.0	75	Weight without oil 重量	178
TN 367 - 32 - 39	39.0-45.0	75		
TN 367 - 32 - 45	45.0-51.0	90	Protection class 保护等级	IP54
TN 367 - 32 - 51	51.0-57.0	90		
TN 367 - 32 - 57	57.0-63.0	100	Noise Level 噪音值	71
TN 367 - 32 - 63	63.0-69.0	110		
TN 367 - 32 - 69	69.0-78.0	110	Number sw/hour 扣压量 / 小时	700
TN 367 - 32 - 78	78.0-87.0	110		

This machine is also available with an analogical control system (Model TN 366 – P 32 IS) and interactive visual swaging control system (Model TN 366 – P 32 VS).

这款机型可以采用 TN366-P 32 IS 和 TN366-P 32 VS 相似系统。

Surface finishes for steel couplings
碳钢接头表面处理

WHITE GALVANIZATION
电镀环保白锌

Fittings with trivalent galvanization, plus film fixing, lubricant, ecological, resistance to salty mist: over 400 hours. (Ref.: European law 2000/53 EC of 18.9.2000).

电镀白锌的管接头经过电解、润滑、环保覆膜，经受超过 400 小时以上的盐雾试验测试，符合欧盟法规 2000/53 第 18.9.2000 条。

Rastelli Raccordi, probably the only fitting manufacturing company which has also galvanizing equipments installed in its production plants, has adopted - in compliance with the law - the above described treatment.

Rastelli 公司严格遵守上述描述表面处理的法规并在工厂内部建立镀锌设备的管接头制造商。

We should like to underline that this treatment eliminates hexavalent chrome, notoriously dangerous to man and environment, thus putting the Rastelli fittings in the class of ecological products, that is NON-NOXIOUS products.

我们要强调这种表面处理完全不含有对人体和环境危险物质，因此 Rastelli 电镀接头是无毒无味完全环保产品。

LIABILITY FOR PRODUCTS
产品责任申明

Our company is insured. for an unlimited figure. by a Policy of Liability for Products. Which also covers accidents.

The Law (D.P.R. 224/88 CE 85-374). however. states that “liability” will be attributed to the party which proves to have been negligent.

The product is liable if the damage caused proves to be due to a defect in the product itself.

我司由保险公司承保，具体为产品的民事责任条件，同时也涵盖了意外险，条例 (D.P.R. 224/88 CE 85-374) 中申明责任将归于造成疏忽的一方，若是由产品本身的缺陷造成的损失，我司将承担全部责任。

The retailer. in turn. is responsible for ascertaining whether his customer is fully aware of how the product should be used giving the instructions of assembling and the commercial technical catalogue in force at the moment of the sale.

经销商在销售的过程中应负责确认无误的保证用户知悉产品的装配指南和商业技术。

The user is liable if, despite being in possession of instructions relating to use of the product, he fails to follow these instructions, believing them to be merely a superfluous formality.

如果用户在拥有使用手册的情况下，而不遵守使用手册的指南，认为使用手册只是一项多余的形式，那么客户应负全部的责任。

The law, therefore, prescribes that both parties should accept their due measure of responsibility, as it is better that everyone should make a concerted effort to avoid cases or accidents of this nature.

因此法律规定双方都应接受其应有的措施的责任，因为这样能更好的使每个人都应该作出协调一致的努力，避免这种性质的案件或者事故。

The guarantee rights can be claimed by the user only if all the instructions contained in the RASTELLI Catalogues have been observed. A failure to observe them may impair the functional safety of the product and implicate the loss of the guarantee rights.

担保权可以有用户中称 Rastelli 公司所有的说明指南都已经知悉，若忽略产品的使用指南，可能会导致产品的安全问题并牵涉他们丢失担保权。

The figures and weights set out in the tables in this catalogue are only intended as approximations.

RASTELLI RACCORDI reserves the right to make any technical or dimensional variations to its products. or change their appearance. in any way they deem fit without notice. The present catalogue revokes and replaces all former ones. The original texts in italian are authoritative in case of any interpretative differences with the versions in other languages

该手册中的数值仅仅是非常接近的近似值，Rastelli 保留其对产品技术和外观更改的权利，可以按照其认为合适的方式进行任何更改，无需提前通知。这本目录册废除并取代以前所有的目录册。如果其他语言的译本存在翻译的差异，以原始意大利文的文本为准。

IDEAZIONE:
Servizio Tecnico e Pubblicità
della RASTELLI RACCORDI s.r.l.

PRODUCTS
产品系列

FLEXIBLE TUBE FITTINGS
软管接头

B.S. - SAE - DIN - NF STANDARD

CARBON STEEL

FITTINGS WITH SUPPLE PACKING
嵌入式卡套

CARBON STEEL – STAINLESS STEEL

DIN 2353 - ISO 8434-1 - AR3/C

SAE J514 - BS 5200

CARBON STEEL – STAINLESS STEEL

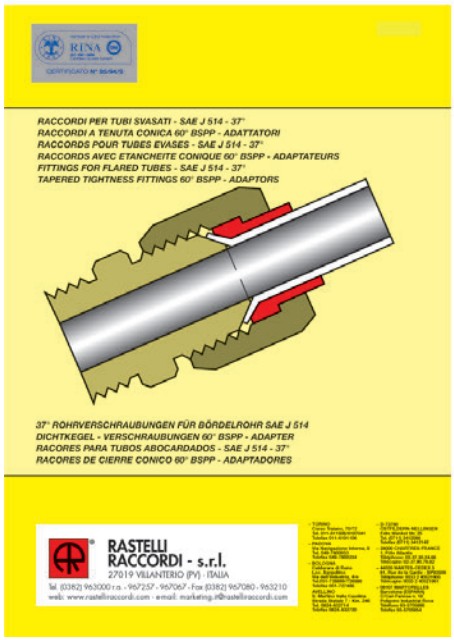

FITTINGS FOR FLARED TUBES-37°
TAPERED TIGHTNESS FITTINGS 60°
BSPP-ADAPTORS
SAE J514-37° 扩口式管接头

CARBON STEEL

NF STANDARD

RING FITTINGS (GAZ TYPE)
DIN2353卡套式管接头

QUALITY CERTIFICATES
质量认证书

RINA
www.rina.org

CERTIFICATE N° 95/94/S
证书号：951941S
意大利（RINA）船级社认证

IQNet
THE INTERNATIONAL CERTIFICATION NETWORK

CERTIFICATE N° IT 2633
证书号：IT 2633
国际质量管理体系

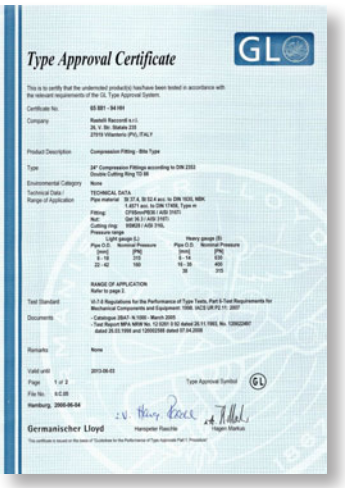

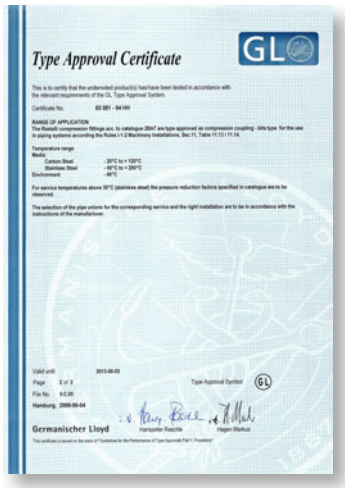

PRODUCT APPROVALS
产品认证书

CERTIFICATE N° 65 881 - 94 HH
证书号：65881-94HH
德国劳氏船级社认证

CERTIFICATE N° MAC/30199/1/TO/99
证书号：MAL/30199/1/T0199
意大利船级社认证

CERTIFICATE N° MAC/30199/2/TO/99
证书号：MAC/30199/21TO/99
意大利船级社认证

CERTIFICATE N° P-12795
证书号：P-12795
挪威船级社认证

CERTIFICATE N° 05-0538-GN
证书号：05-0538-GN
德国燃气与水工业协会认证

TECHNICAL DATA
一般技术资料

Surface finishes for steel couplings (DIN 3859).
碳钢管接头表面处理（碳钢材质符合 DIN3859 标准）

Series LL/L/S (Bodies. Rings. Nuts):
Rastelli 管接头分为超轻型、轻型、重型（接头体、卡套和卡套螺母）
White passivation treatment Fe/Zn 8-UNI ISO 2081 with trivalent Chrome (free from hexavalent chrome) with sealer in compliance with the European Norm EC 200/53.
符合标准 UNI ISO 2081 的白锌三价铬（不含六价铬）的表面处理，表面的封闭液层符合欧洲标准 EC200/53，盐雾实验抗白斑时间为 200 小时，抗红绣时间为 400 小时以上。
有特殊要求的表面处理可以订制。

Pressure values indicated in the relative coupling tables in accordance with DIN 2401 STANDARDS
本目录里相关的管接头的压力值是符合 DIN2401 标准。

a) PN rated pressure corresponds to a safety factor of PN × 4 times.
公称压力设计系数为 4.
b) Maximum PE operating pressure corresponds to a safety factor of:
最高工作压力安全系数 .
PE × 2.5 times for the complete coupling.
安装后系数为 2.5 倍 .
PE × 4 times for the ring pre-assembled on pipe.
预安装系数为 4 倍 .
The pressure values indicated in the relative coupling tables are understood as the maximum operating pressure values inclusive of peak values during standard operating conditions. with maximum permissible TB (DIN 2401) operating temperatures of:
本目录里相关的管接头的压力值为最大操作压力值包括最高峰值的操作条件下，允许的最高工作温度为：

- 40℃ ÷ + 120℃ for steel (DIN 3859) 碳钢接头（DIN3895）
- 60℃ ÷ + 200℃ for AISI 316 Ti stainless steel (DIN 17122-W. Nr. 1.4571) AISI 316 Ti 不锈钢接头（DIN 17122-W.No.1.4571）

With stainless steel. pressure values must be reduced in accordance with increases in the operating temperature:
不锈钢材质管接头的压力值会随着工作温度的上升而降低

+ 50℃ = -4% ~ pressure
+ 50℃ = 压力降低 4%
+100℃ = -10% ~ pressure
+100℃ = 压力降低 10%
+200℃ = -20% ~ pressure
+200℃ = 压力降低 20%
+300℃ = -30% ~ pressure
+300℃ = 压力降低 30%
+400℃ = -35% ~ pressure
+400℃ = 压力降低 35%

Materials and operating temperatures for DIN 2353 / ISO 8434-1coupling seals
DIN 2353/ISO 8434-1 标准卡套式管接头的不同材质密封件的工作温度范围

NBR (Perbunan® - BAYER)	=	-35℃ ÷ +100℃ for steel (DIN 3859)
NBR（丁晴橡胶）	=	-35℃至 +100℃ 碳钢材质（DIN3859）
FPM (Viton® - DU PONT)	=	-25℃ ÷ +200℃ for AISI 316 Ti stainless steel (DIN 17122-W. Nr. 1.4571).
FPM（氟橡胶）	=	-25℃至 +200℃ 不锈钢 AISI316 材质（DIN 17122-W.Nr.1.4571）

For the fittings with seals attend to the instructions of NORM DIN 7716 "RUBBER PRODUCTS". Requirements for storage. cleaning and maintenance。
带弹性密封件的产品请按照橡胶产品规范 DIN7716 储存，清理和保养。

Recommended torque wrench setting MT in Nm
管接头的旋紧力矩

For male stud couplings with DIN 3852 Type B Part 2 type seal and flat GG with DIN 3852 Type E Part 11
适用于外螺纹端口符合 DIN3852 标准的第二部分形式和 DIN3852 标准的第 11 部分的形式 E

Series 系列	Pipe Ø 管子外径 O.D.	THREADS – TORQUE WRENCH SETTINGS 螺纹形式					
		B.S.P. ThreadØ 英制螺纹	Type B MT (Nm)B 型扭力	Type E MT (Nm)E 型扭力	Metric Thread Ø 公制螺纹	Type B MT (Nm) 形式 B 扭力	Type E MT (Nm) 形式 E 扭力
轻型 L	6	G 1/8"	25	20	M 10 × 1	25	20
	8	G 1/4"	45	40	M 12 × 1.5	30	30
	10	G 1/4"	45	40	M 14 × 1.5	50	50
	12	G 3/8"	85	80	M 16 × 1.5	80	60
	15	G 1/2"	160	100	M 18 × 1.5	90	80
	18	G 1/2"	105	100	M 22 × 1.5	150	140
	22	G 3/4"	230	200	M 26 × 1.5	240	200
	28	G 1"	390	380	M 33 × 2	400	380
	35	G 1"1/4	600	500	M 42 × 2	600	500
	42	G 1"1/2	800	600	M 48 × 2	800	600
重型 S	6	G 1/4"	60	60	M 12 × 1.5	45	45
	8	G 1/4"	60	60	M 14 × 1.5	60	60
	10	G 3/8"	110	90	M 16 × 1.5	95	80
	12	G 3/8"	110	90	M 18 × 1.5	120	100
	14	G 1/2"	170	130	M 20 × 1.5	170	140
	16	G 1/2"	140	130	M 22 × 1.5	190	150
	20	G 3/4"	320	200	M 27 × 2	320	200
	25	G 1"	390	380	M 33 × 2	450	380
	30	G 1"1/4	600	500	M 42 × 2	600	500
	38	G 1"1/2	800	600	M 48 × 2	800	600

The torque values given here are only approximate and referring to the assembly of steel fittings with a protective surface treatment of galvanizing of the components made of the same material by using a lubricant (or a special anti-seizure agent in case of stainless steel - values given on request). following the directions of the Assembly Instructions. Said values can change according to materials employed. tolerances and surface finishing of the assembling components as well as the assembly method.
这些力矩数据仅仅适用于镀锌管接头的材质和连接部件的材质完全相同的场合并完全遵循安装说明书的指示，也就说扭矩会因为采用不同的材质、公差、配件的表面处理和安装方式而变化。
Use the values relative to the S series for TN 141 couplings.
上述表格的扭力也同样也适用于 TN141 接头系列。

Types of thread for DIN 2353 / ISO 8434-1 couplings
适用于 DIN2353/ISO8434-1 卡套式接头的螺纹形式

B.S.P. PARALLEL	=	UNI EN ISO 228
英制圆柱螺纹	=	UNI EN ISO 228
B.S.P. TAPER	=	UNI ISO 7/1 (UNI EN ISO 10226/1)
英制锥螺纹	=	UNI IDO7/1(UNI EN ISO 10226/1)
METRIC PARALLEL	=	UNI 4535-64
公制圆柱螺纹	=	UNI 4535-64
METRIC TAPER	=	DIN 158
公制锥螺纹	=	DIN158
NPT	=	ANSI/ASME B.1.20.1 (1983)
美制锥螺纹	=	ANSI/ASME B.1.20.1 (1983)
UNF-UN	=	ANSI/ASME B.1.1 (1989)
美制细牙直管螺纹	=	ANSI/ASME B.1.1 (1989)

Hermetic seals for taper threads
锥螺纹的密封件

Taper threads are not hermetically sealed. To obtain a watertight hermetic seal additional sealing elements are required such as PTFE sealing tape (e. g.: TEFLON).
锥螺纹不完全密封，若要获得完全密封则需要 PTFE 材质的密封件（比如生料带）

Thread coupling
管接头的油口端螺纹和密封型式

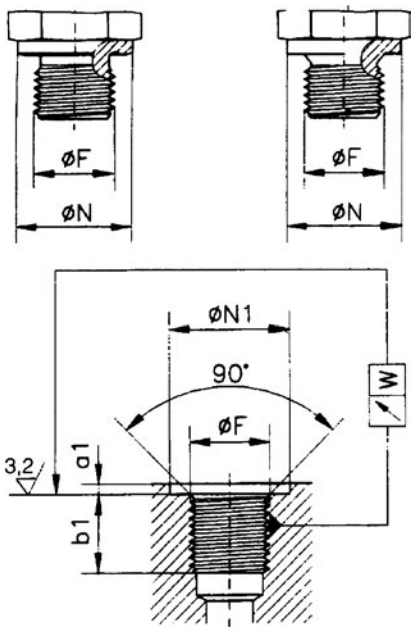

Male stud. form B
DIN 3852. Part 1-2
metal to metal seal

DIN3852.第一部分形式B
硬性密封结构

Male stud. form A
DIN 3852. Part 2
seal to DIN 7603 standards

DIN3852 第二部分形式A
带弹性体密封结构

Port form X
to DIN 3852. Part 1-2
(for parallel stud thread)

与A.B形式端部适配的螺纹形式X

Thread B.S.P. parallel
英制圆柱螺纹

Ø F	+0.4 Ø N1	Ø N	a1 MAX	b1 MIN	W
G 1/8"-28	15	14	1	8	0.1
G 1/4"-19	20	18	1.5	12	0.1
G 3/8"-19	23	22	2	12	0.1
G 1/2"-14	28	26	2.5	14	0.1
G 3/4"-14	33	32	2.5	16	0.2
G 1"-11	41	39	2.5	18	0.2
G 1"1/4-11	51	49	2.5	20	0.2
G 1"1/2-11	56	55	2.5	22	0.2

* Tolerance class (A) is only valid for male threads
A 级公差仅适用于外螺纹

Thread metric parallel
公制圆柱螺纹

Ø F	+0.4 Ø N1	Ø N	a1 MAX	b1 MIN	W
M 10 × 1	15	14	1	8	0.1
M 12 × 1.5	18	17	1.5	12	0.1
M 14 × 1.5	20	19	1.5	12	0.1
M 16 × 1.5	23	21	1.5	12	0.1
M 18 × 1.5	25	23	2	12	0.1
M 20 × 1.5	27	25	2	14	0.1
M 22 × 1.5	28	27	2.5	14	0.1
M 26 × 1.5	33	31	2.5	16	0.2
M 27 × 2	33	32	2.5	16	0.2
M 33 × 2	41	39	2.5	18	0.2
M 42 × 2	51	49	2.5	20	0.2
M 48 × 2	56	55	2.5	22	0.2

Thread coupling
管接头的油口端螺纹和密封型式

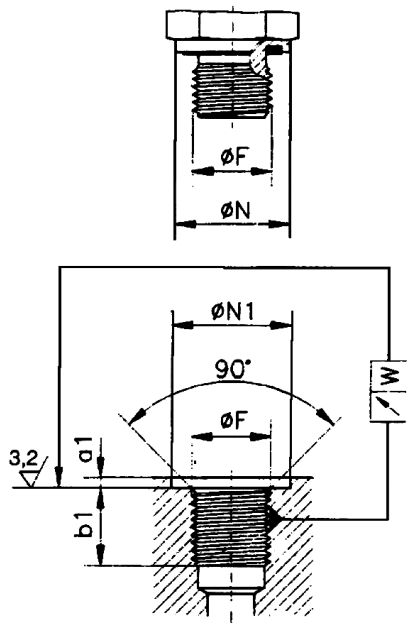

Male stud. form E
DIN 3852. Part 11
Packing-ensured tightness.
DIN3852第11部分，形式E
带弹性体密封结构

Port form X
to DIN 3852. Part 1-2
(for parallel stud thread)
与A.B形式端部适配的螺纹形式X

Thread B.S.P. parallel
英制圆柱螺纹

Ø F	+0.4 Ø N1	Ø N	a1 MAX	b1 MIN	W
G 1/8"-28	15	13.9	1	8	0.1
G 1/4"-19	20	18.9	1.5	12	0.1
G 3/8"-19	23	21.9	2	12	0.1
G 1/2"-14	28	26.9	2.5	14	0.1
G 3/4"-14	33	31.9	2.5	16	0.2
G 1"-11	41	39.9	2.5	18	0.2
G 1"1/4-11	51	49.9	2.5	20	0.2
G 1"1/2-11	56	54.9	2.5	22	0.2

* Tolerance class (A) is only valid for male threads
A 级公差仅适用于外螺纹

Thread metric parallel
公制圆柱螺纹

Ø F	+0.4 Ø N1	Ø N	a1 MAX	b1 MIN	W
M 10 × 1	15	13.9	1	8	0.1
M 12 × 1.5	18	16.9	1.5	12	0.1
M 14 × 1.5	20	18.9	1.5	12	0.1
M 16 × 1.5	23	21.9	1.5	12	0.1
M 18 × 1.5	25	23.9	2	12	0.1
M 20 × 1.5	27	25.9	2	14	0.1
M 22 × 1.5	28	26.9	2.5	14	0.1
M 26 × 1.5	33	31.9	2.5	16	0.2
M 27 × 2	33	31.9	2.5	16	0.2
M 33 × 2	41	39.9	2.5	18	0.2
M 42 × 2	51	49.9	2.5	20	0.2
M 48 × 2	56	54.9	2.5	22	0.2

Thread coupling
管接头的油口端螺纹和密封型式

Male stud. form C
DIN 3852. Part 1-2
taper thread
DIN3852，第1-2部分，形式C，锥螺纹

Port form Z
to DIN 3852. Part 1-2
(for taper stud thread only)
DIN3852 .第1-2部分的形式Z，仅适用于锥螺纹

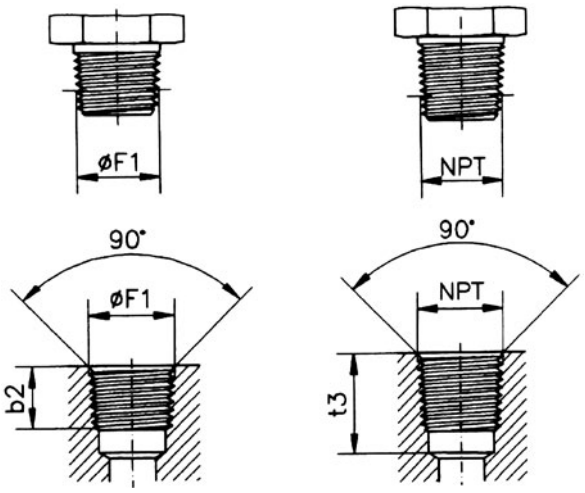

Male stud NPT
NPT 外螺纹
Port NPT
NPT 螺纹孔

Thread B.S.P. taper
英制锥螺纹

Ø F1	b2 MIN
R 1/8"-28 CON.	5.5
R 1/4"-19 CON.	8.5
R 3/8"-19 CON.	8.5
R 1/2"-14 CON.	10.5
R 3/4"-14 CON.	13
R 1" -11 CON.	14.5
R 1"1/4-11 CON.	17
R 1" 1/2-11 CON.	17

Thread metric taper
公制锥螺纹

Ø F1	b2 MIN
M 8 × 1 CON.	5.5
M 10 × 1 CON.	5.5
M 12 × 1.5 CON.	8.5
M 14 × 1.5 CON.	8.5
M 16 × 1.5 CON.	8.5
M 18 × 1.5 CON.	8.5
M 20 × 1.5 CON.	10.5
M 22 × 1.5 CON.	10.5

NPT thread
美制锥螺纹

NPT	t3 MIN
1/8" - 27 NPT	11.6
1/4" - 18 NPT	16.4
3/8" - 18 NPT	17.4
1/2" - 14 NPT	22.6
3/4" - 14 NPT	23.1
1"- 11.5 NPT	27.8
1"1/4 - 11.5 NPT	28.3
1"1/2 - 11.5 NPT	28.3

Thread coupling
管接头的油口端螺纹和密封型式

Male stud UNF-UN-2A for O-Ring sealing (SAE J 514)
UNF-UN-2A 外螺纹O型圈密封（SAEJ514）

Port UNF-UN-2B for O-Ring sealing (SAE J 514)
UNF-UN-2B螺纹孔 O型圈密封（SAEJ514）

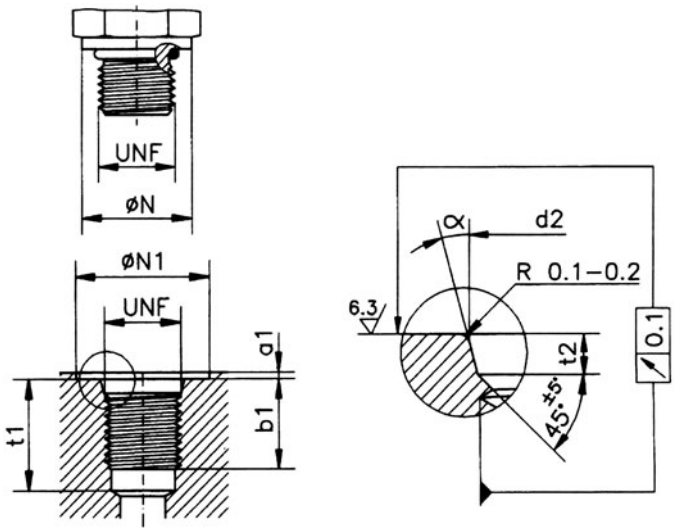

UNF/UN thread
UNF/UN螺纹表

UNF	b1 MIN	Ø N MIN	+0.1 d2	+0.3 t2	t1 MIN	± 1° α	Ø N1 MIN	a1 MAX
7/16 - 20 UNF	12	14.4	12.4	2.4	14	12°	21	1
9/16 - 18 UNF	13	17.6	15.6	2.5	16	12°	26	1
3/4 - 16 UNF	15	22.3	20.6	2.6	18	15°	32	1.5
7/8 - 14 UNF	17	25.5	23.9	2.6	20	15°	35	1.5
1"1/16 - 12 UN	20	31.9	29.2	3.3	24	15°	42	1.5
1"5/16 - 12 UN	20	38.2	35.5	3.3	24	15°	50	2
1"5/16 - 12 UN	20	47.7	43.5	3.4	24	15°	60	2.5

Thread coupling
卡套管接头的管端尺寸

TUBE CONNECTION DIMENSIONS (Threaded coupling TN 87)
TN87的卡套管接头的管端尺寸

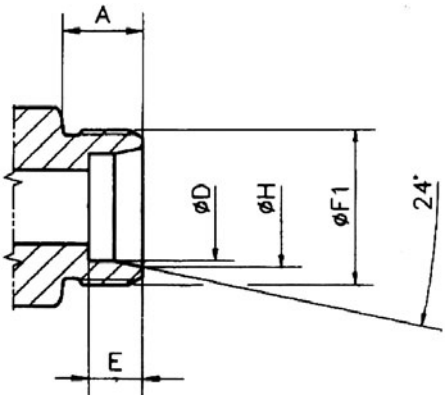

Thread metric parallel 公制圆柱螺纹

系列	Ø 钢管外径 D	Ø F1 螺纹	A	E	Ø H
超轻型 LL	4	M 8 × 1	8	4	5
	5	M 10 × 1	8	5.5	6.5
	6	M 10 × 1	8	5.5	7.5
	8	M 12 × 1	9	5.5	9.5
	10	M 14 × 1	9	5.5	11.5
	12	M 16 × 1	9	6	13.5
轻型 L	6	M 12 × 1.5	10	7	8.1
	8	M 14 × 1.5	10	7	10.1
	10	M 16 × 1.5	11	7	12.3
	12	M 18 × 1.5	11	7	14.3
	15	M 22 × 1.5	12	7	17.3
	18	M 26 × 1.5	12	7.5	20.3
	22	M 30 × 2	14	7.5	24.3
	28	M 36 × 2	14	7.5	30.3
	35	M 45 × 2	16	10.5	38
	42	M 52 × 2	16	11	45
重型 S	6	M 14 × 1.5	12	7	8.1
	8	M 16 × 1.5	12	7	10.1
	10	M 18 × 1.5	12	7.5	12.3
	12	M 20 × 1.5	12	7.5	14.3
	14	M 22 × 1.5	14	8	16.3
	16	M 24 × 1.5	14	8.5	18.3
	20	M 30 × 2	16	10.5	22.9
	25	M 36 × 2	18	12	27.9
	30	M 42 × 2	20	13.5	33
	38	M 52 × 2	22	16	41

INSTRUCTIONS

安装指南

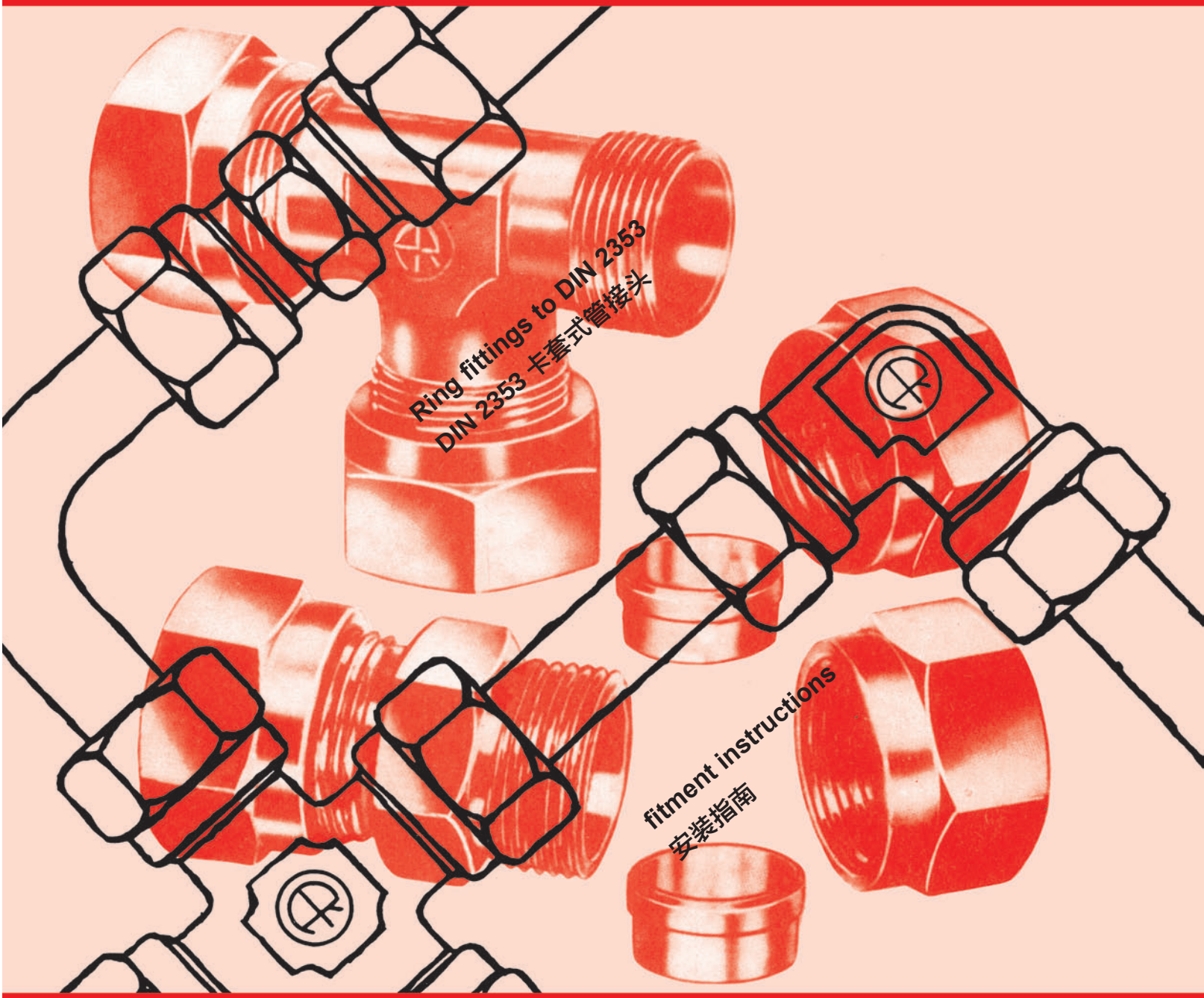

DIRECT CONNECTION TO THE BODY OF THE UNION FOR STEEL PIPES
直接安装到管接头上

1. Preparing the inside and outside of the pipe
装配前的管子准备工作

1.1

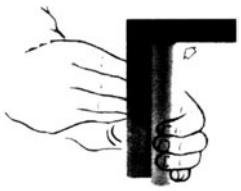

Cut the pipe at right angle. A maximum variation of 0.5 ° in relation to the pipe axis is permitted.
如图所示，正确的切割管子，最大切割角度允许偏差为 0.5°

1.2

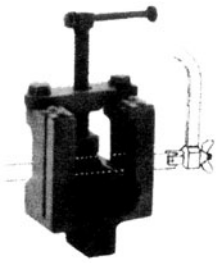

It is easier to cut the pipe at a right angle if a hacksaw is used with the special tool.
使用一把合适的锯齿工具更容易切割出正确角度的管子

CAUTION: Never use pipe cutters or cut-off saws which leave the pipe ends with abundant burrs and slanted cuts. Pipe ends with burrs or incorrect angles reduce the lifetime and sealing efficiency of the union.
注意：禁止使用管子切割机，因为切割机会在管子的端部产生锥形的端口或毛刺，这些不恰当的角度和毛刺将会降低管接头的密封性能和使用寿命。

1.3

Deburr the inside and outside of the pipe slightly. without damaging the mating surface (max. bevel 0.2 ϕ 45°).
清洁管子的内外端口，无金属碎片，端口表面光滑。

CAUTION: If using thin-wall pipes. the reinforcing rings TN 80 must be used (see point 15.3).
注意：在适用薄壁钢管时，我们建议适用加强衬套 TN80（15.3 图所示）

2. Preparing the unions (Lubrication)
润滑工作

2.1

Oil the TD 88 ring. the thread of the nut TN 81. the tapered seat and the thread of the union.
在管接头的螺纹和卡套 TD88 和卡套螺母 TN81 上涂上润滑油。

2.2

Insert the nut TN 81 and the ring TD 88 until they fit against the end of the pipe.
将螺母 TN81 和卡套 TD88 套到管子上，直到感觉它们到达管子底部。

2.3

Fit the head of the ring TD 88 facing towards the thread of the nut TN 81.

CAUTION: The ring TD 88 must always be fitted in the correct direction.
注意：卡套 TD88 必须以正确的方向套入，卡套有刃口的一头应朝向管端。

3. Screw connection
螺纹连接

3.1

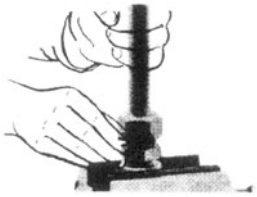

Insert the pipe into the union until it reaches the stop and fully tighten the nut TN 81 by hand.
把接头插入管子，并用手旋紧螺母 TN81 直到感觉拧不动了。

CAUTION: The pipe must rest completely against the seat in the union; otherwise. the correct cut will not be made in the ring TD 88.
注意：管端口必须紧靠在接头体上，否者卡套就不能对管子有效的切割。

3.2

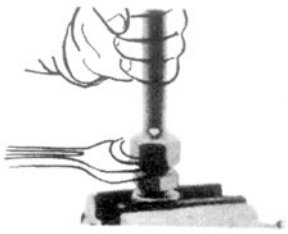

Tighten the nut TN 81 by about one and a half turns. Check that the pipe does not turn with the nut TN 81., To check that tightening takes place correctly. mark the nut TN 81 and the pipe.
用扳手把螺母 TN81 旋转 1 1/2 转，并防止管子转动。

4. Checking
装配检查

4.1

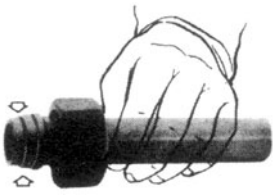

Unscrew the nut TN 81 and check that the incision on the pipe is uniform; it must form a collar of material in front of the first cutting edge of the ring TD 88. The ring may turn on the pipe. If the cut is not uniform. repeat the operation. tightening further.
旋开卡套螺母，检查管子上的切口是否均匀，可见在卡套 TD88 的作用下，管子上有隆起的位置，卡套可以在管子上转动但不可轴向移动。若切口不明显需要加大力度重复操作。

CAUTION: The ends of dismantled pipes must be refitted to the same unions used for the tightening procedure.
注意，拆除后的管子必须于其旋转过程中适用的接头体一样。

5. Reassembly
重复安装

5.1

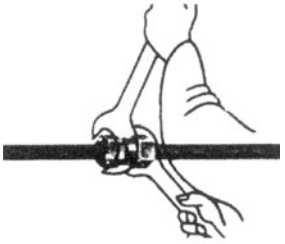

Whenever the pipe connections are dismantled. the nut TN 81 must be screwed tightly onto the union as during first installation (using the same force). supporting the union with a second spanner.
重新安装时，螺母必须适用相同的扭力安装到预安装的位置，可使用另一把扳手夹住接头体。

6. Minimum pipe length
最小直管长度

6.1

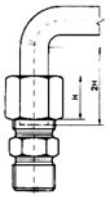

Minimun length of straight pipe in elbows; at least twice the thickness of the nut TN 81 (H).
弯管最小直线长度为螺母的长度的 2 倍

6.2

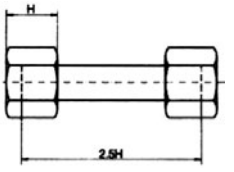

Minimum lenght of the pipe between two unions: at least 2.5÷3 times the thickness of nut TN 81 (H).
直管连接最小直线长度为螺母的 2.5 至 3 倍

CAUTION: The straight section of pipe in elbows (2H) must not show any differences in roundness or straightness which exceed the dimensional tolerances of the pipe under DIN 2391.
注意：直线距离的线型公差必须符合 DIN2391 标准内。

CONNECTION WITH THE PREFITTING TOOL TN 195 (and subsequent final tightening on the union)

采用预安装模具 TN195 进行安装

7. Checking the prefitting tool TN 195
   检查预装模具TN195

7.1

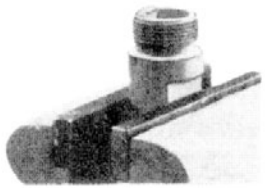

The tapered seat of the prefitting tool TN 195 is subject to wear. so it must be checked at regular intervals (after the 50th fitting procedure) using the specific tapered gauge TN 196. to ensure that its taper is correct.
由于预装工具 TN195 的锥形端口会磨损，所以有必要要用锥形规 TN196 定期检查以确保锥度正确。

CAUTION: All TN 195 prefitting tools which are out of tolerance must be replaced to avoid fitting errors. Make a visual check on the taper for any scoring or other anomalies which the tapered gauge TN 196 will not detect.
注意：所有预装工具 TN195 超出公差 / 必须更换掉以避免安装出错，同时用肉眼检查锥度上 TN 196 规无法检测到的任何刮痕或其他异物。

8. Preparing the inside and outside of the pipe
   管子准备工作

8.1

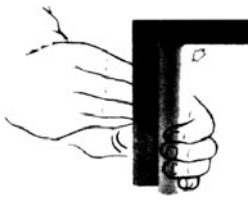

Cut the pipe at right angle. A maximum variation of 0.5° in relation to the pipe axis is permitted.
正确切割管子，管子的切割角度最大公差为 0.5°

8.2

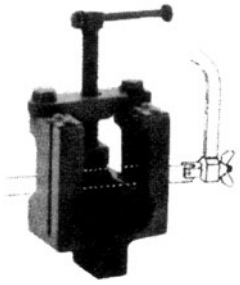

It is easier to cut the pipe at a right angle if a hacksaw is used with the special tool.
适用正确的锯齿工具更容易切割出正确角度的管子。

CAUTION: Never use pipe cutters or cut-off saws which leave the pipe ends with abundant burrs and slanted cuts. Pipe ends with burrs or incorrect angles reduce the lifetime and sealing efficiency of the union.
注意：禁止使用管子切割机，因为切割机会在管子端部留下锥形端口或毛刺，这些不恰当的角度和毛刺将会降低管接头密封性能和使用寿命。

8.3

Deburr the inside and outside of the pipe slightly. without damaging the mating surface (max. bevel 0.2 ϕ 45°).
清洁管子的内外端口，无金属碎片，端口表面光滑。

CAUTION: If using thin-wall pipes. the reinforcing rings TN 80 must be used (see point 15.3).
注意：若在使用薄壁钢管时，我们建议适用加强衬套 TN80(如 15.3 图所示)

9. Preparing the unions (LUBRICATION)
润滑工作

9.1

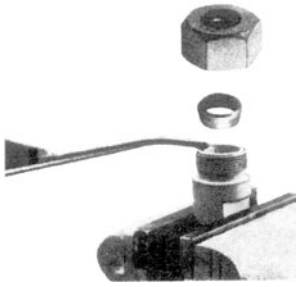

Oil the ring TD 88. the thread of the nut TN 81. the tapered seat and the thread of the prefitting tool. For stainless steel unions. the ring TD 88. the thread of the nut TN81. the tapered seat and the thread of the prefitting tool must be lubricated using an anti-seizing product (e.g. Molyguard - Vanguard)
在预装工具、端口止档座、接头体、卡套和螺母上涂上润滑油，如果不锈钢材质接头，我们必须用抗磨损润滑剂。

For standard fitting of stainless steel pipes and for large diameters (over 20S). and for all TN 119-120-121-126-132. pipe unions. the union MUST be prefitted in the special TN 195 tool.
不锈钢接头和大尺寸（超过20S）和TN 119-120-121-126-132的接头必须使用特殊的TN195预装工具

9.2

Insert the nut TN 81 and the ring TD 88 until they fit against the end of the pipe.
把卡套螺母 TD88 和 TN81 卡套安装到切割好管端。

9.3

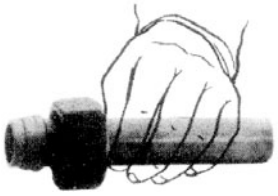

Fit the head of the ring TD 88 facing towards the thread of the nut TN 81.
卡套头部必须正对着卡套螺母的螺纹。

CAUTION: The ring TD 88 must always be fitted in the correct direction.
注意：卡套必须以正确的方式套入。

10. Vormontage
准备安装

10.1

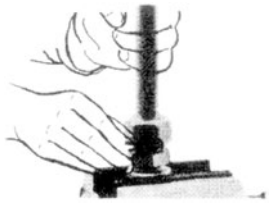

Insert the pipe into the tool TN 195 until it reaches the stop and fully tighten the nut TN 81 by hand.
把管子插入 TN195 工具直到达底部用手旋紧卡套螺母 TN81。

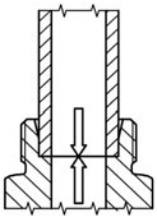

CAUTION: The pipe must rest completely against the seat in the tool TN 195; otherwise. the correct cut will not be made in the ring TD 88.
注意：管子必须完全插入 TN195 工具的止档座，否者无法正确切割管子。

10.2

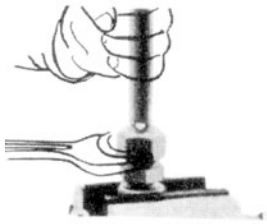

Tighten the nut TN 81 by about one turn. Check that the pipe does not turn with the nut TN 81. To check that tightening takes place correctly. mark the nut TN 81 and the pipe.
用扳手旋转螺母 1 1/2 转并防止管子随螺母转动。

For easier. safe connection to stainless steel pipes. back off the nut TN 81 by a few turns and lubricate the threads and friction parts with an anti-seizing product (see fig.9.1).
为了更简便和安全安装不锈钢管子，可以旋开螺母一小转时使用螺纹和减少摩擦的润滑剂。

11. Checking
检查预安装

11.1

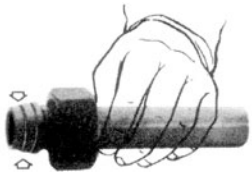

After prefitting unscrew the nut TN 81 and check that the cut on the pipe is uniform; it must form a collar of material in front of the first cutting edge of the ring TD 88.
旋开预安装螺母 TN81 检查管子上的切口是否均匀，可见在卡套 TD88 的第一条切线前有隆起。

12. Final Assembly
最终安装

12.1

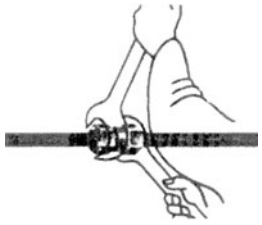

Screw the nut TN 81 (prefitted) by spanner (without extension) onto the body of the union until the point of resistance is met . then use a spanner (we reccomend use of an extension) to turn through ½ of a turn. supporting the union using the second spanner. See table on the side. Torque is available on demand.
将已预安装卡套的管端插入接头体内，紧紧顶住后用手拧紧螺母，然后使用开口扳手拧紧，直到感觉阻力急剧增大，再拧紧 1/2 即可，所需力矩请看下图所示。

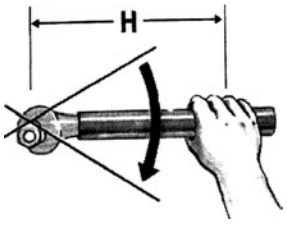

	H (mm)
22L	400
28L-20S	500
35L-25S	800
42L-30S	1000
38S	1200

12.2

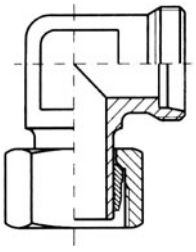

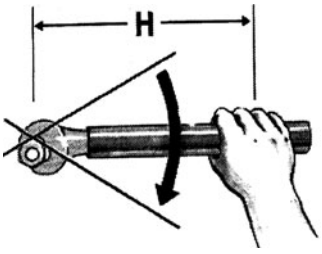

ATTENTION! FITTINGS WITH PREASSEMBLED CUTTING RING
Final assemby of all pre-assemlled fitting TN-119-120-121-126-132 is obtain after appropriate lubrication by tightening with dey (without Bxtensian) (preassembled) mit TN81 on the bady of another union until is ascertained a point of resistance, thon tishter with dey (we recommend use of an extension) for about 1/2 turn. See table on the side. Torgue is available on demand.
注意：管接头和预安装的卡套所有已经预装卡套的接头（TN119-120-121-126-132）在进行管路正式装配时，只需拧紧螺母，从力矩激增点起再拧 1/4 圈即可，所需力拒如左表格所示。
IT IS ABSOLUTELY FORBIDDEN THE ASSEMBLING OF THESE FITTINGS ON OTHER FITTINGS OTHER MARK DIFFERENT FROM RASTELLI.
绝对禁止安装这些接头跟除 RASTELLI 接头外的管件连接。

接头规格	扳手长度 H (mm)
22L	400
28L-20S	500
35L-25S	800
42L-30S	1000
38S	1200

12.3

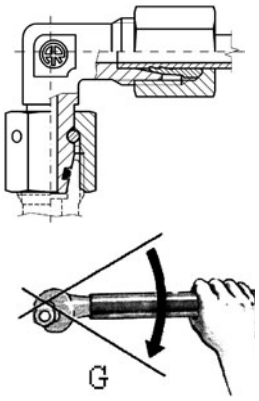

For final assembly of all the unions TN 419-420-421-426-432-498. after appropriate lubrication screw the prefitted nut TN 81 by hand onto the body of another union until the point of resistance is met. then tighten with a wrench by a further 1/4 turn (G).

卡套接头系列 TN-419-420-421-426-432-498 的最终安装，用手拧紧润滑过的螺母 TN81. 直到阻力激增为止，再用扳手继续拧紧 1/4 圈。

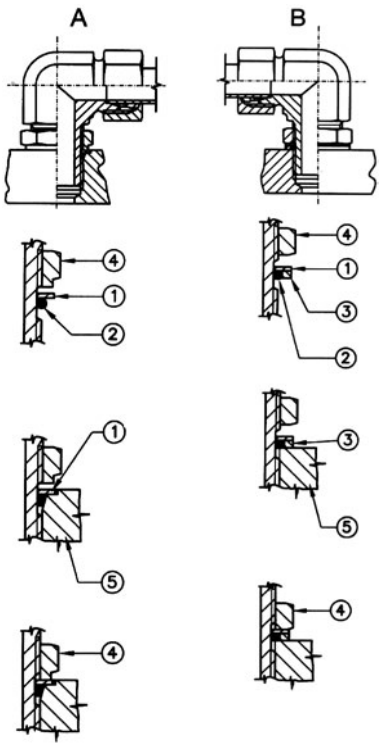

The final assembly of all connections TN 514-515-516-517 (Version A with UNF/UN thread Metric parallel thread DIN EN ISO 6149. Version B with BSP parallel Cyilindrical thread) is obtained as follows:TN514-515-516-517

（可调向接头版本 A 的 UNF/UN 螺纹和公制圆柱螺纹的 DIN EN ISO 6149 标准和版本 B 的 BSP 圆柱螺纹）的最终装配方式如下：

1. Screw back bulkhead nut ④ as for as it goes.
   将锁紧螺母向后旋。
2. O-Ring ② and fixed anti-extrusion ① should be at the upper end of the notch.
   将 O 型和垫圈放置在无螺纹端，尽可能的靠近螺母
3. Oil the O-Ring.
   O 型圈涂上润滑油。
4. In the versions with BSPP. Metric cylindrical (W) thread slip mobile ring ③ over O-Ring.
   BSPP 直螺纹和公制直螺纹要放入挡圈在 O 型圈上。
5. Manually screw the fitting into the screwing hole ⑤till mobile ring ③ or fixed anti-extrusion ① comes to rest.
   用手将接头旋入油口，直至接触挡圈或垫圈的底部。
6. To adjust in the wanted position turnback by maximum one turn.
   如需调整方向，最大反拧一圈。
7. Tighten bulkhead nut ④ completely while keeping the fitting body in the wanted position.
   保持接头体在正确的位置，并拧紧锁螺母。

13. Checking
安装检查

13.1

After final fitting unscrew the nut TN 81 and check that the cut on the pipe is uniform; it must form a collar of material in front of the first cutting edge of the ring TD 88. For stainless steel pipes. the collar of material is different structure of the material.
旋开卡套螺母，检查管子上是否有均匀的切口，有明显可见的隆起切口。不锈钢由于材质不同隆起的结构也不所不同。

14. Reassembly
重复安装

14.1

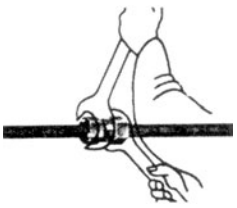

Whenever the pipe connections are dismantled. the nut TN 81 must be screwed tightly onto the union as during first installation (using the same force). supporting the union with a second spanner.
任何时候管子连接件拆除后，卡套螺母必须拧紧到第一次安装的位置并使用相同的扭力，可使用扳手再次拧紧。

FITTING REINFORCING RINGS TN 80 IN THE PIPE
使用加强衬套 TN80 在薄壁管子里。

15. Preparing the inside and outside of the pipe
管子准备工作

15.1

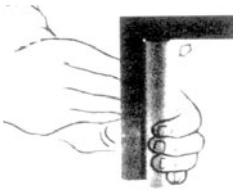

Cut the pipe at right angle. A maximum variation of 0.5° in relation to the pipe axis is permitted.
正确切割管子角度，最大允许角度偏差为 0.5°

® RASTELLI
RACCORDI - s.r.l.
27019 VILLANTERIO（PV）

雷斯特利中国代表处

地址：南京市秦淮区中山东路300号长发中心（CFC）A 座908室
No.908 Building A. No.300 Zhongshan East Road (CFC) Qinhuai District,
210002 ， Nanjing，China

Tel. +86 – 025 – 5221 0778 M. +86 – 0 181 0516 6120
Email: yanhua.wu@rastelliraccordi.it

cat. 1J/EN

AR3/C

CUTTING RING
WITH TIGHT SEALING
FOR PIPE FITTINGS
DIN 2353 (ISO 8434-1)

雷斯特利系列产品 DIN2353 (ISO 8434-1)

卡套接头AR3/C卡套

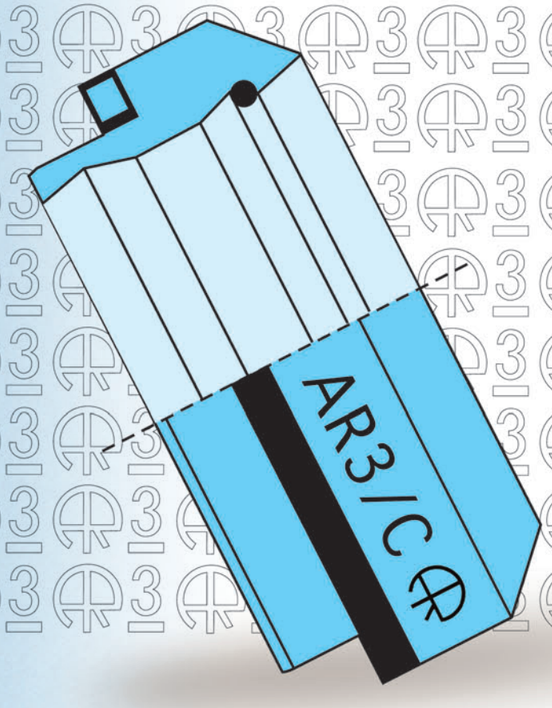

® RASTELLI
RACCORDI - s.r.l.
27019 VILLANTERIO（PV）

www.rastelliraccordi.it

OUR ADRESSES
全球各个分部和销售办事处以及售后服务中心联系方式

HEAD OFFICE意大利总部
Rastelli Raccordi-s.r.l.
27019 VILLANTERIO (PV)-ITALIA
Tel. (+39) 0382/r.a.-967257-967067
Fax. (+39) 0382/967080-963210
email: marketing.it@rastelliraccordi.it
administration.it@rastelliraccordi.it
sito internet: www.rastelliraccordi.org

Branch Offices in Italy意大利销售办事处
TORINO
Corso Traiano, 70/72
Tel. 011/611508-6197041-Fax 011/6191106
email: torino.it@rastelliraccordi.it

PADOVA
Via Navigazione Interna, 9
Tel. 049/7800933-Fax 049/7800234
email: padova.it@rastelliraccordi.it

AVELLINO
S.Martino Valle Caudina
Strada Statale 7-Km. 246
Tel. 0824/832714-Fax 0824/832720
email: avellino.it@rastelliraccordi.it

南京雷斯特利液压管件有限公司
Rastelli Raccordi Trading (Nanjing) Co., Ltd.
地址：南京市秦淮区中山东路300号
长发中心（CFC）A 座908 室
No.908 Building A. No.300 Zhongshan East Road
(CFC) Qinhuai District, 210002, Nanjing, China
Tel. +86-025-52210778
M. +86 181 0516 6120
Email: yanhua.wu@rastelliraccordi.it

BOLOGNA
Calderara di Reno-Loc. Bargellino
Via dell'Industria, 4/e
Tel. 051/728889-728886-Fax 051/727486
email: bologna.it@rastelliraccordi.it
Branch Offices in Europe

D-73760 OSTFILDERN-NELLINGEN德国销售办事处
Felix Wankel Str.25
Tel. 0711/3412086-Fax 0711/3412142
email: germany@rastelliraccordi.eu

28000 CHARTRES-FRANCE法国销售办事处
1, Pôle Atlantis
Téléphone: 02/37302466
Télécopie: 02/37907982
email: france1@rastelliraccordi.eu
email: france2@rastelliraccordi.eu

44335 NANTES-CEDEX 3法国销售办事处
61, Rue de la Garde-BP93509
Téléphone: 0033 2 40521905
Télécopie: 0033 2 40521961
email: nantes@rastelliraccordi.eu

08107 MARTORELLES-Barcelona (ESPAÑA)
西班牙销售办事处
C/Can Fanosa n. 18
Poligono Industrial Roca
Teléfono 93/5705895-Telefax 93/5705954
email: espana@rastelliraccordi.eu

QUALITY CERTIFICATES
质量认证书

RINA
www.rina.org

CERTIFICATE N° 95/94/S
证书号：951941S
意大利（RINA）船级社认证

IQNet
THE INTERNATIONAL CERTIFICATION NETWORK

CERTIFICATE N° IT 2633
证书号：IT 2633
国际质量管理体系

PRODUCT APPROVALS
产品认证书

DVGW
CERT GMBH

CERTIFICATE N° DG4502BS0493
CERTIFICATE N° DG4502BS0494
证书号：DG4502BS0493
证书号：DG4502BS0494
德国燃气与水工业协会认证

1. CLAMPING RING AR3/C

1.1 简述

该型号为AR3/C的新型卡套是由RASTELLI RACCORDI公司独立设计与开发的，其宗旨在于为市场提供一种特殊的，易操作的产品，且该型号和不锈钢材质AR3卡套得到广泛应用，因而具备以下的几个基本特征:

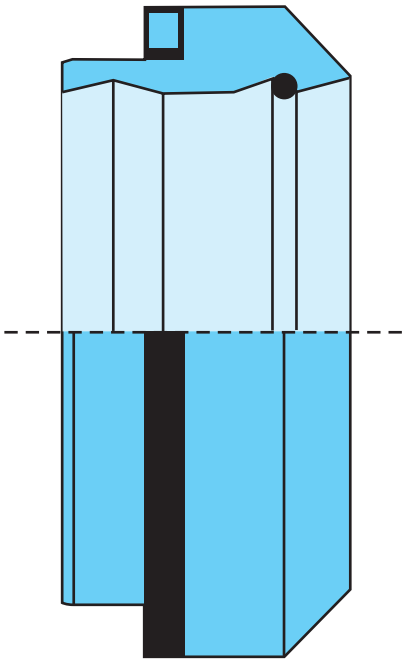

图1

a) 易于安装

b) 完全密封

c) 自动关闭

d) 于DIN2353卡套接头及所有配件可实现互换性工作

1.2 各项试验，测试的保证基础

AR3/C型号卡套的构想，设计与测试的基础是RASTELLI RACCORDI 公司内部新品设计的流程方案，该流程方案已通过ISO9001认证，且RASTELLI RACCORDI 已经把这种方案贯彻到了公司的内部结构中。

1.3 产品的可追溯性结构

AR3/C卡套具有相应标记允许产品的可追溯性结构，如图2所示：

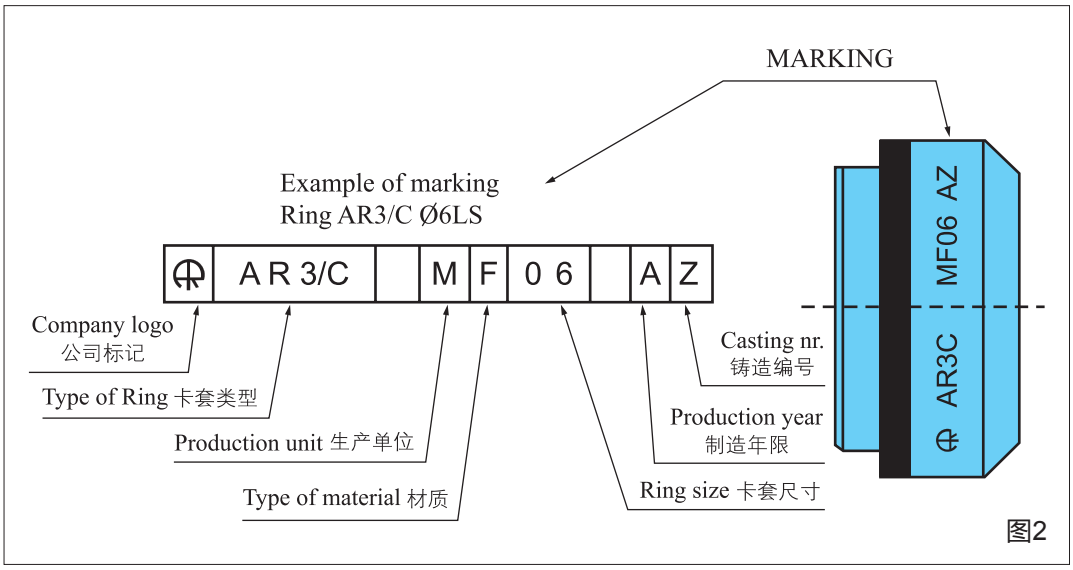

图2

2. 特点

2.1 易于安装

AR3/C卡套的安装改变了传统安装耗时、耗力的缺点，这得益于切口与钢管之间的控制，例如：

1) 在钢管和螺母上做上可识别的记号，以确认螺母的圈数和准确钳位

2) 使用测力扳手确认扭力（Nm）以便确认具体的钳位

2.2 完全密封

AR3/C卡套在轴向的始末位置都有一个硫化过的橡皮密封垫圈，（见图3），且在后方有一个O型圈被安置在环形槽内

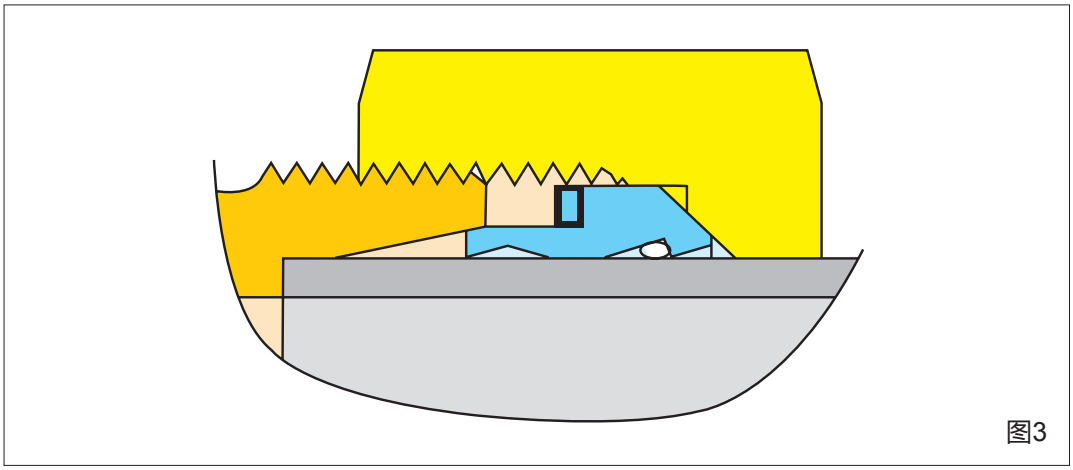

图3

在钳入阶段，AR3/C卡套由于受硫化橡胶圈的挤压，被卡套螺母推向接头体内24° 锥，见图4的位置，从而使整个系统完全密封。

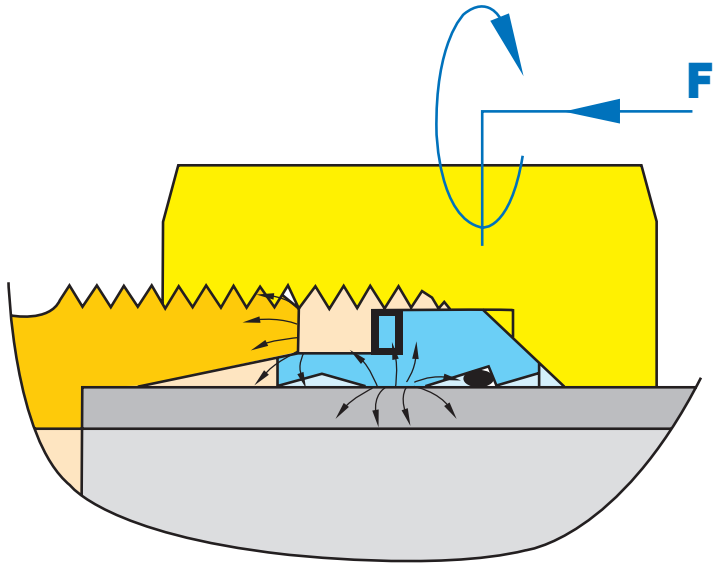

图4

O型圈独特的造型也是至关重要的，由于该卡套的弹性作用，在钳位阶段事先收到了F转矩的压缩，也得益于它后方的切割形状，可以将整个管道围住（见图4）从而保证了完美的密封性。

2.3 自动关闭

当卡套受到螺母的挤压，便滑向接头体内24° 锥，（见图5）直到A面和B面合二为一的时候，AR3/C卡套便会自动关闭，促使操作员停止钳位。

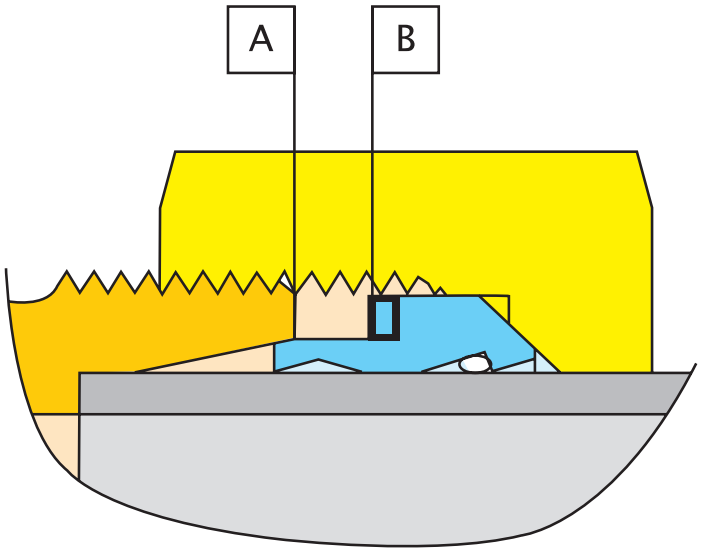

图5

该系统确保了AR3/C卡套在钢管上最精确的切割。给操作员唯一的建议是跟踪查看，当螺母旋开后，A面与B面在一条直线上便是精确的周长。（见图6）

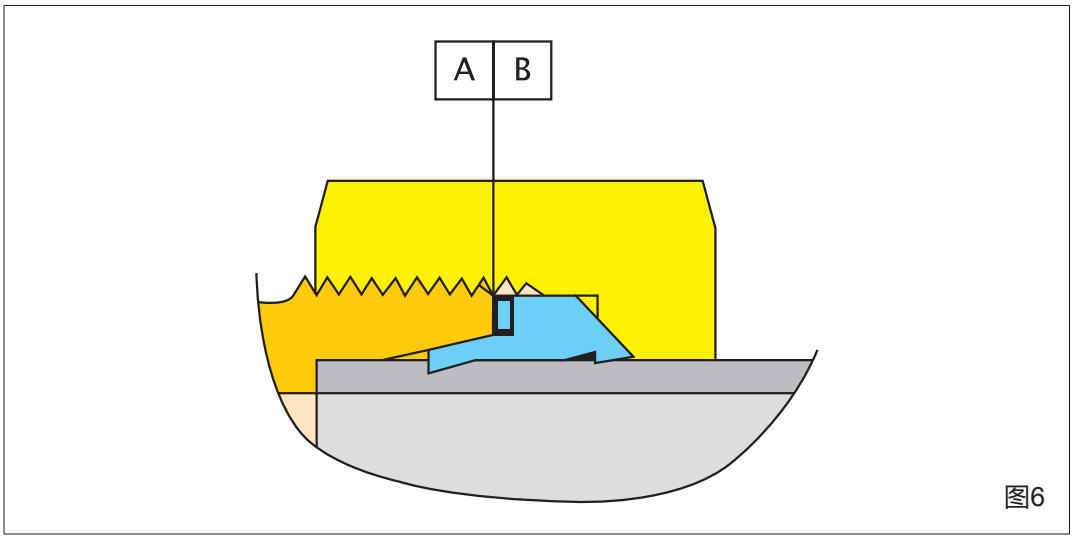

图6

在最后的钳位阶段（见图6），硫化垫圈有着调节可能出现的误差的功能，这些误差可能是由不同部件（接头体，钢管，卡套，螺母）挤压自身所增加的误差引起的，这些部件自我挤压直到最后完美的与接头体和AR3/C卡套结合一体。

2.4 与DIN2353 24° 卡套式接头可实现所有交换性工作

新型AR3/C卡套可和其他单刃卡套或双刃卡套在卡套式接头上实现完美互换。

AR3/C卡套也可以像RASTELLI TN88-TD88-AR3 传统的卡套使用预装模具TN195进行预安装。

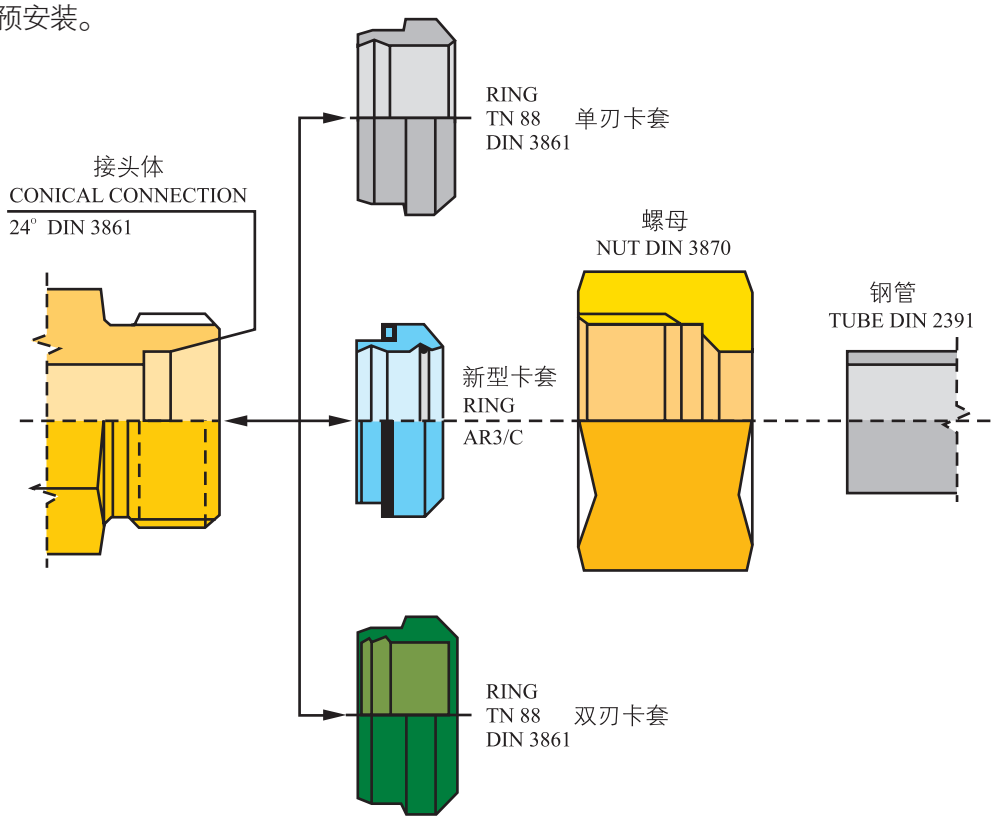

订货型号

Example:

如：

TN92GG-10LR (Ring TN88, 1 cutting edge – stainless steel and series LL)

TN92GG-10LR（TN88单卡套，不锈钢材质及超轻型系列）

TD92GG-10LR (Ring TD88, 2 cutting edges)

TN92GG-10LR（TD88单卡套，双刃卡套）

TA92GG-10LR (Ring AR3 – Only stainless steel)

TN92GG-10LR（配卡套AR3，不锈钢卡套）

TC92GG-10LR (Ring AR3/C – Only carbon steel)

TN92GG-10LR（配卡套AR3/C，碳钢卡套）

由于具有完全密封的特点，AR3/C卡套被推荐使用在所有带弹性密封件的接头体上，例如NBR（碳钢）或者FPM(不锈钢），它们能保证与AR3/C具有一样的效果，如，防泄漏，在外表上保持管道的干燥。特别推荐与Rastell这些接头一起使用达到最良好的密封效果。 如：TN 400 (TN 419– 420–421–426–432，从而可代替TN 119–120–121–126–132。

3. 技术参数

3.1 技术参数

表面处理

三价铬白色钝化处理Fe/Zn 8 – UNI ISO 2081（不含六价铬）和表面覆膜符合欧洲EC200/53标准

材料及最高工作温度

金属部分：碳钢（DIN3859） -40℃ ÷ +120℃

橡胶部分：NBR（丁晴橡胶） -35℃ ÷ +100℃

压力

公称压力是的安全系数为4。

这里的压力指的是最大工作压力，包括了正常工作条件下的峰值以及最高工作温度。

AR3/C卡套的密封件的“橡胶制品”主要涉及到存储，清洁和保养方面遵从DIN7716的相关标准。

AR3/C

TIGHT CLAMPING RING
AR3/C卡套选型型号

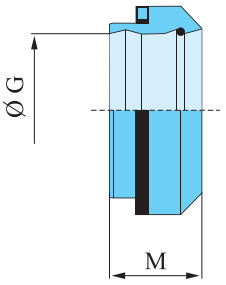

SERIES 系列	Ø TUBE 钢管外径	PN 公称压力	ØG	M	ORDER CODE 订货型号	WEIGHT KG. × 100PCS 重量kg. × 100件
L 轻型	6	315	6	9	**AR3/C - 6 LS**	0.21
	8		8	9	**AR3/C - 8 LS**	0.26
	10		10	9.3	**AR3/C - 10 LS**	0.31
	12		12	9.5	**AR3/C - 12 LS**	0.36
	15		15	9.5	**AR3/C - 15 L**	0.66
	18		18	9.5	**AR3/C - 18 L**	1.05
	22	160	22	11.5	**AR3/C - 22 L**	1.05
	28		28	11.5	**AR3/C - 28 L**	1.33
	35		35	13	**AR3/C - 35 L**	3.08
	42		42	13	**AR3/C - 42 L**	3.74
S 重型	6	630	6	9	**AR3/C - 6 LS**	0.21
	8		8	9	**AR3/C - 8 LS**	0.26
	10		10	9.3	**AR3/C - 10 LS**	0.31
	12		12	9.5	**AR3/C - 12 LS**	0.36
	14		14	10	**AR3/C - 14 S**	0.73
	16	400	16	10	**AR3/C - 16 S**	0.87
	20		20	13	**AR3/C - 20 S**	1.80
	25		25	13.3	**AR3/C - 25 S**	2.52
	30		30	14	**AR3/C - 30 S**	3.60
	38	315	38	14	**AR3/C - 38 S**	5.42

4. 组装

4.1 安装说明

a) 钢管内外的准备工作

a1) 从正确的角度切割钢管。以钢管的轴线为参照，允许0.5° 的误差

a2) 用合适的手工锯更容易切出准确的角度

注意：请勿使用切管机或车床切割机

a3) 小心清理钢管内外，端面无破坏性割痕（最大倒角为0.2 × 45° ）

b) 钢管的最短长度

b1) 弯管的最短直线距离：至少是螺母TN81 (H)高度的2倍距离（见图1）

b2) 两个连接体之间钢管的最短长度：螺母高度的2.5-3倍距离（见图2）

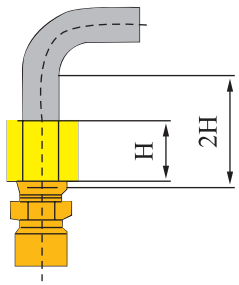

图1

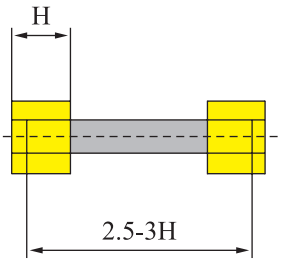

图2

c) 接头体的准备工作（润滑工作）

c1) 分别给AR3/C，TN81的螺纹，锥体模具和接头体的螺纹，预先安装模具TN195的螺纹上，上一遍润滑油。

c2) 将螺母TN81和卡套AR3/C 套入钢管底部，卡套头部有刃口端朝向螺母TN81螺纹。

4.2 直接连接到碳钢接头体

d1) 将钢管插入接头体直到停止为止，再用手将螺母TN81旋紧

注意：钢管应当紧挨着接头体，否则AR3/C将不能准确的进行切割。

d2) 旋紧TN81螺母直到遇到A-B面产生激增的阻力（是自动关闭的作用）。控制钢管将不再随TN81螺母旋转。

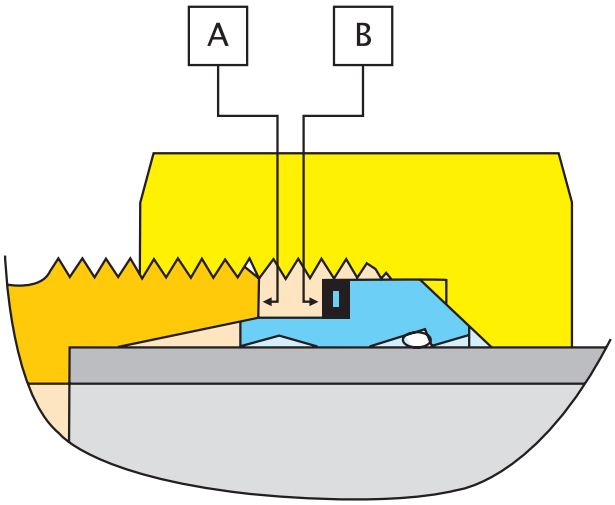

图3

e) 控制

e1) 旋开TN81螺母并并检查A-B面重合后是否是周长的长度。（见图4）

注意：被拆卸的钢管应与预安装相同接头体上重新组装。

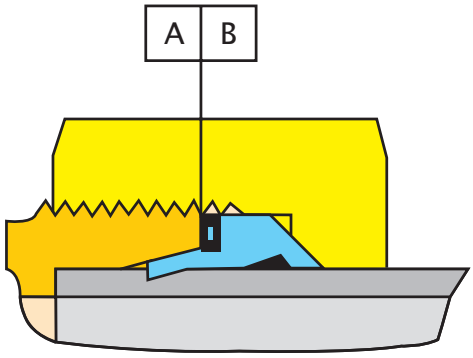

图4

f) 重新装配

f1) 当钢管连接件被拆卸后，必须使用一个普通的扳手将螺母TN81重新拧紧，如第一次组装一样（以同样的转矩）和用另一个扳手以支撑安装。

4.3 使用预装配模具TN 195进行组装

g) 检查预装配模具TN195

g1) 预装配中锥体与损耗有关，所以需要经常使用特殊的锥体规TN196进行检查（50次安装操作以上），以核实它的锥度。

当使用大直径的钢管时，（超过20S），必须确保接头体事先与预安装模具TN195相连。

h) 预装配

h1) 将钢管插入工具TN195中直到它停止，用手将螺母TN81完全拧紧

注意：钢管应当紧挨着接头体，否则AR3/C将不能准确的进行切割。

h2) 旋紧TN81螺母直到遇到A-B面产生一股激增的阻力（是自动关闭的作用）。（见图5）控制钢管将不再随TN81螺母旋转。

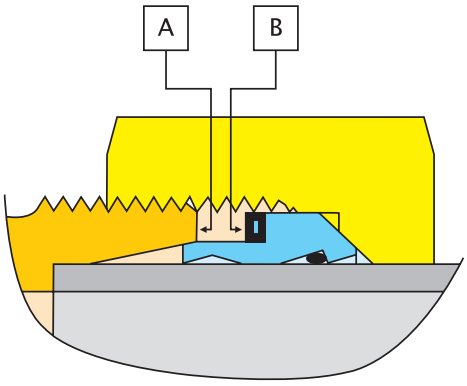

图5

i) 控制

i1) 预装配之后，从预安装模具TN195中旋开螺母TN81，并检查A-B面重合后是否是周长的长度。（见图6）

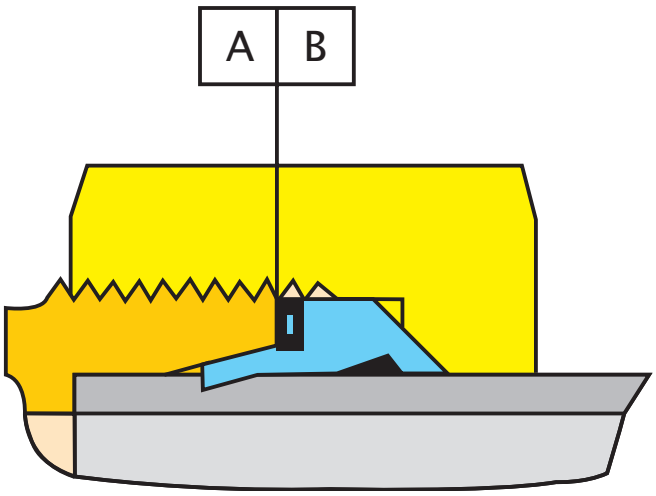

图6

j) 最终安装

j1) 手动旋转在装置接头上的螺母TN81（预装配）直到遇到一股激增阻力。然后使用普通扳手以与在预装配中相同的转矩，并使用另一把扳手以支撑安装。

k) 重新安装

k1) 当钢管连接件被拆卸后，必须使用一个普通的扳手将螺母TN81重新拧紧，如第一次组装一样（以同样的转矩）用另一个扳手以支撑安装。

4.4 使用气动机器TN294A安装

l) 锥体TN287A模具的控制

l.1) TN287A的锥体与损耗有关，因此在实行预先钳位操作前应当使用特定的锥体规TN196检查锥体以核实它的锥度。

m) 预装配

m1) 请根据下表设置机械的操作压力

尺寸	压力	尺寸	压力	尺寸	压力	尺寸	压力	尺寸	压力	尺寸	压力
6LS	0.7	12LS	1	22L	1.7	42L	4.5	20S	3.2	38S	4.5
8LS	0.8	15L	1.1	28L	2.4	14S	1.6	25S	3.4	-	-
10LS	0.8	18L	1.3	35L	2.6	16S	1.9	30S	3.7	-	-

m2) 将底座TN286A(1) 和锥体TN287A（2）放入机器中（见图7）

m3) 将钢管，AR3/C型环与TN81螺母放在底座与锥体之间（见图8）

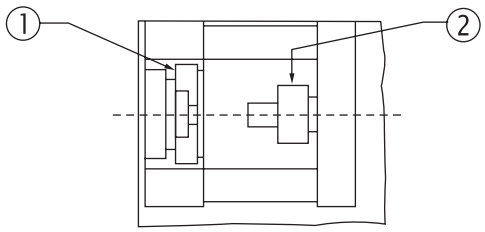

图7

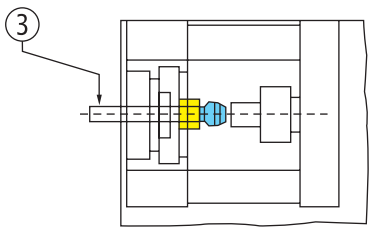

图8

m4) 将钢管插入锥体TN287A中，直到它停止。

注意：钢管应当紧挨着接头，否则AR3/C将不能准确的进行切割。

m5) 紧握住钢管，按下安全按钮以开始运转机器。

n) 最终安装

n1) 将预装配钢管的尾部插入接头体，用手转动螺母TN81直到遇到一股激增阻力，然后使用普通扳手将螺母拧紧，直到阻力突增为止。

5. 标准规范

5.1 重要提示

a) 小直径钢管可以直接插入到接头体中

b) 为了更简易的拧紧螺母，扳手的长度可以延长至六边宽度的15倍。

c) 预装配组装完成后，应使用普通扳手将TN81螺母拧紧。

d) 组装装置时，如果钢管比例的非常长或尤其受到挤压时，则应当使用工具或者管夹来支撑。RASTELL公司同样也生产和供应此种由不同材质（聚丙烯，聚酰胺，铝）制成的管夹，种类齐全。

e) 对于高压力橡胶管必须特别注意，如果用户自行使用橡胶管做连接，后果请自负。因为众所周知，装置DIN2353标准接头只适用于钢管。

6. 责任声明

6.1 产品的民事责任

我司由保险公司承保，具体为产品的民事责任条例，同时也涵盖了意外险。条例（D.P.R. 224/88 EG/85-374），中声明责任将归于造成疏忽的一方。若是由产品本身的缺陷造成的损失，我司将承担全部责任。

零售商应负责确定无误的保证他的客户知悉产品的使用方法。

如果用户在拥有使用手册的情况下，而不遵守使用手册上的指南，认为使用手册只是一项多余的形式，那么客户应负全部的责任。

因此，法律规定，双方应接受其应有的措施的责任，因为这样能更好的使每个人都应该作出协调一致的努力，避免这种性质的案件或事故。

担保权可以由用户声称，但条件是RASTELLI公司所有的说明指南都已知悉。

若忽略产品的使用指南可能会导致产品的安全问题，并牵涉他们丢失担保权。

该手册表格中的数值仅仅是非常接近的近似值。RASTELLI RACCORDI保留在技术上或者尺寸上或者外观上改变产品的所有权。

DESIGN:
Technical and Advertising Service of
RASTELLI RACCORDI S.r.l.